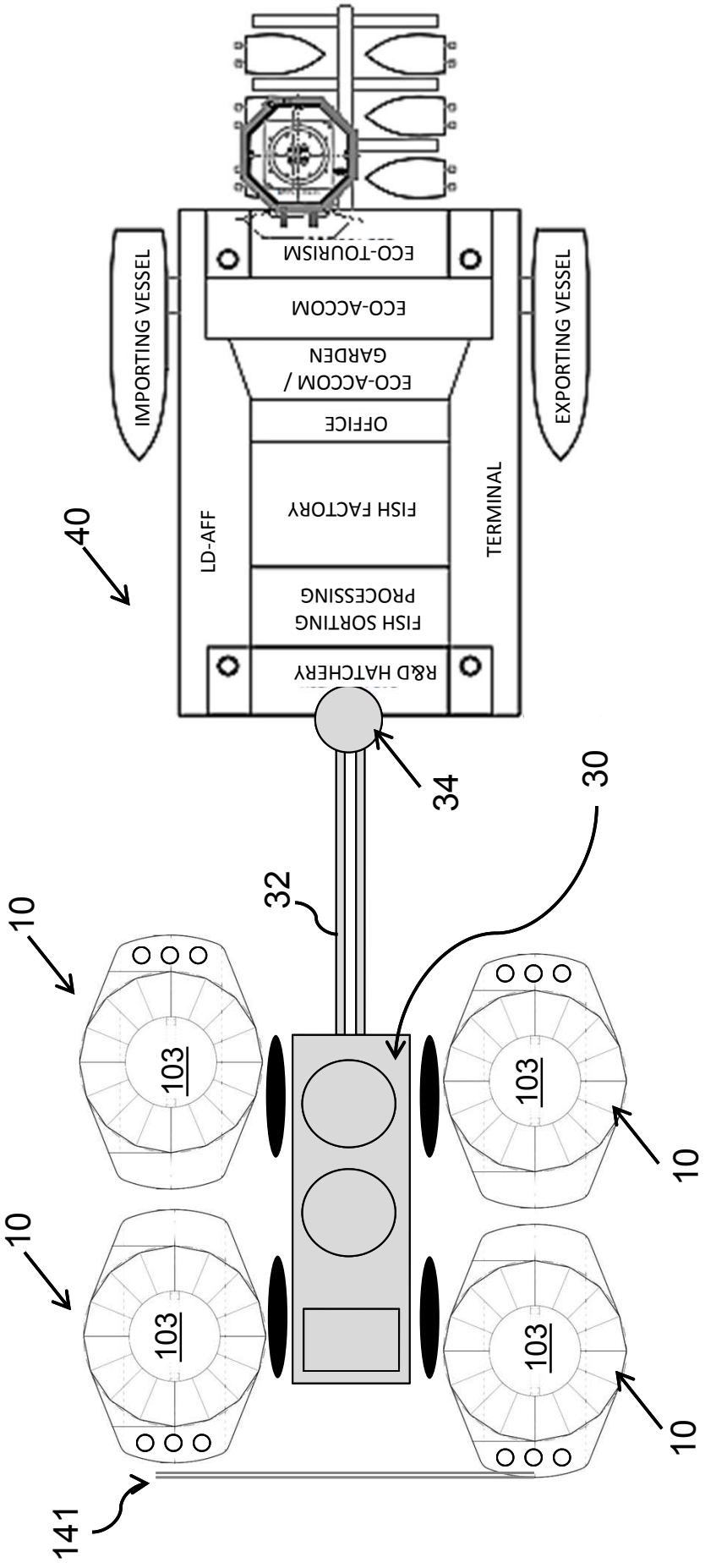
IMPORTING VESSEL
EXPORTING VESSEL
ECO-TOURISM
ECO-ACCOM
ECO-ACCOM / GARDEN
OFFICE
FISH FACTORY
FISH SORTING PROCESSING
R&D HATCHERY
LD-AFF
TERMINAL
40
34
30
32
10
103
141

Figure 1H

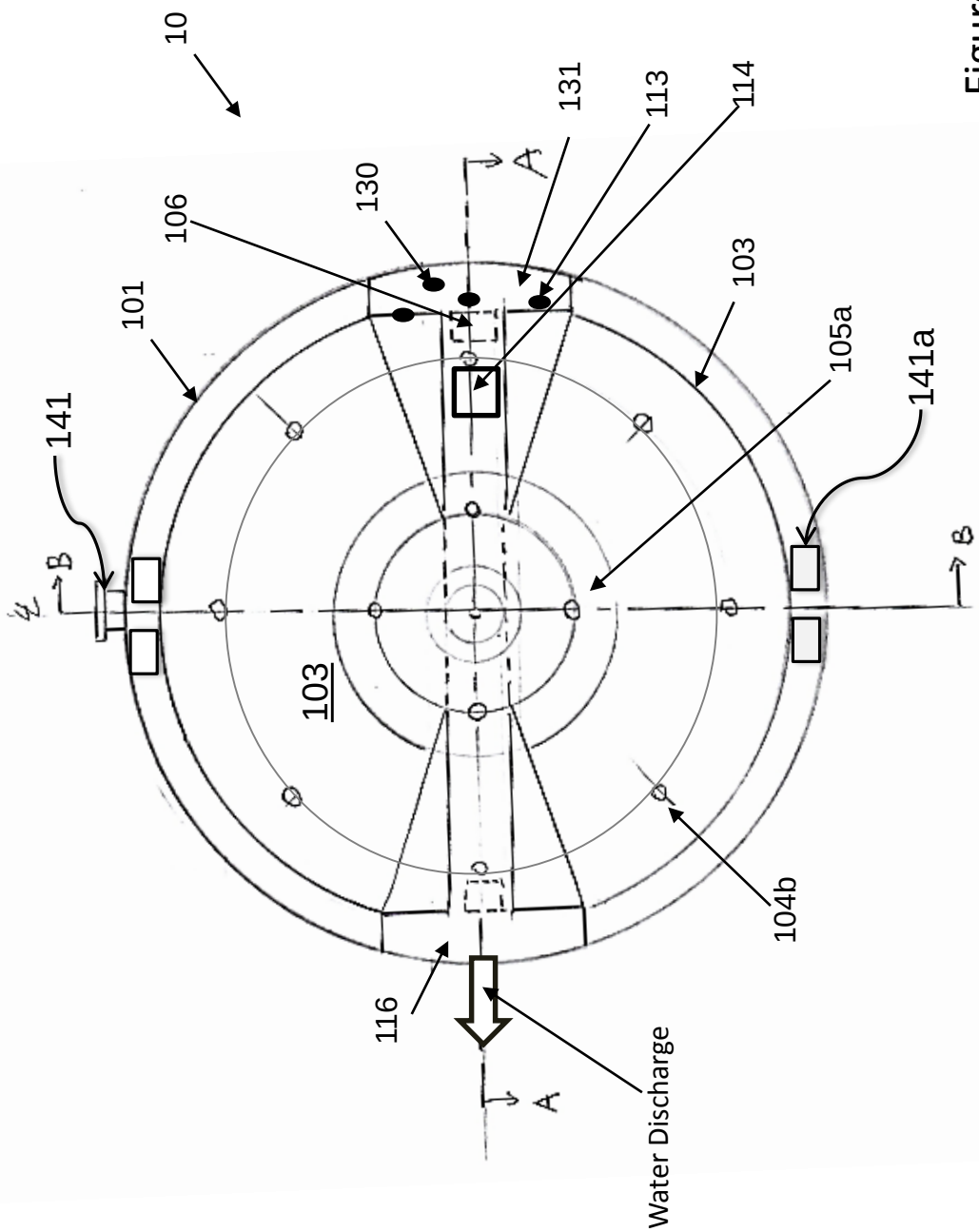
10
131
113
114
130
106
101
103
105a
141a
141
B
B
A
A
103
104b
116
Water Discharge

Figure 2D

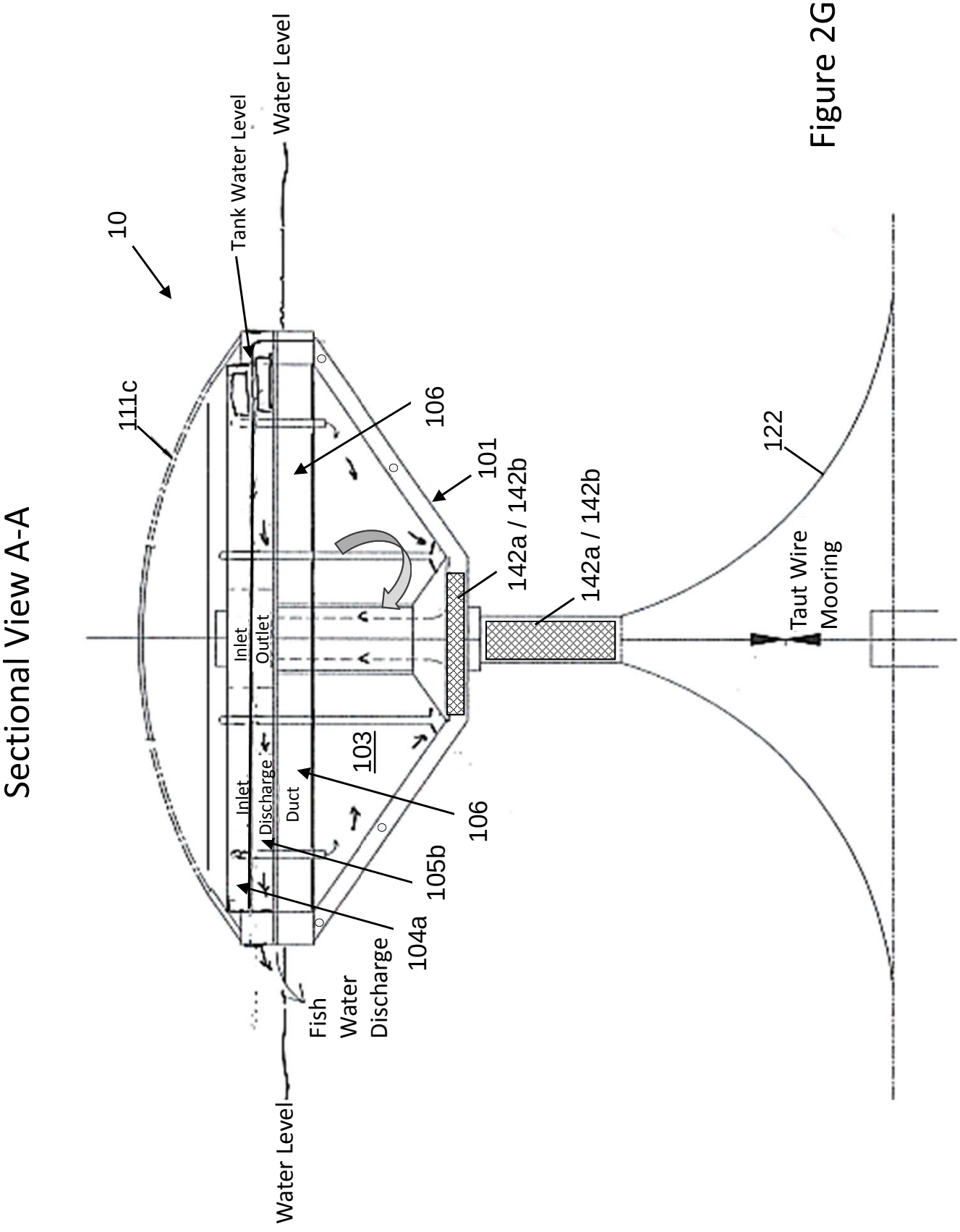
Sectional View A-A
10
Tank Water Level
Water Level
111c
106
101
142a / 142b
142a / 142b
122
Taut Wire Mooring
Inlet
Outlet
Inlet
Discharge
Duct
103
106
105b
104a
Fish Water Discharge
Water Level

Figure 2G

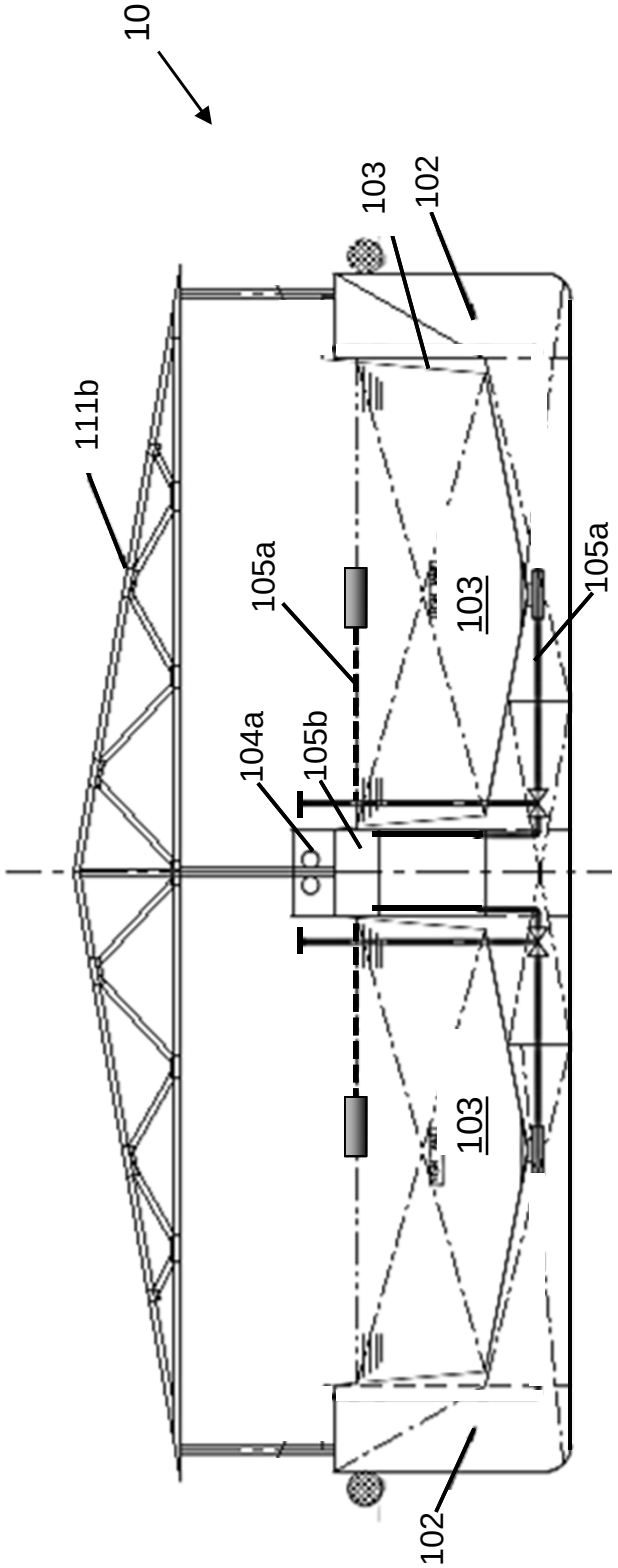

Figure 6A

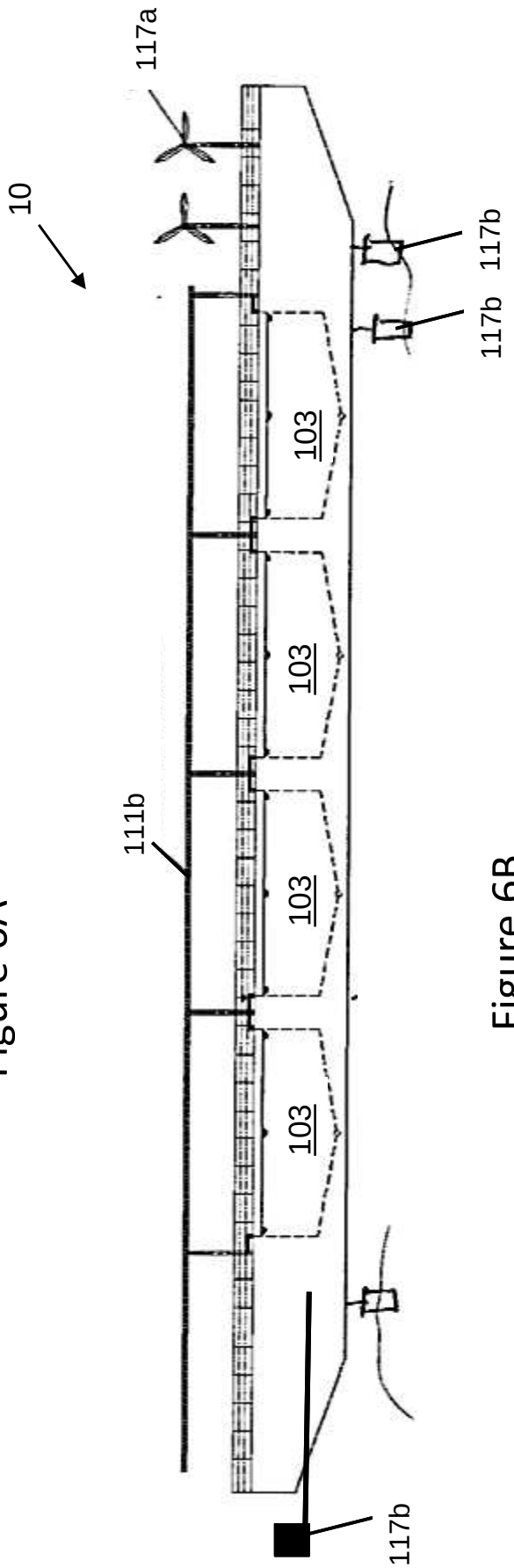

Figure 6B

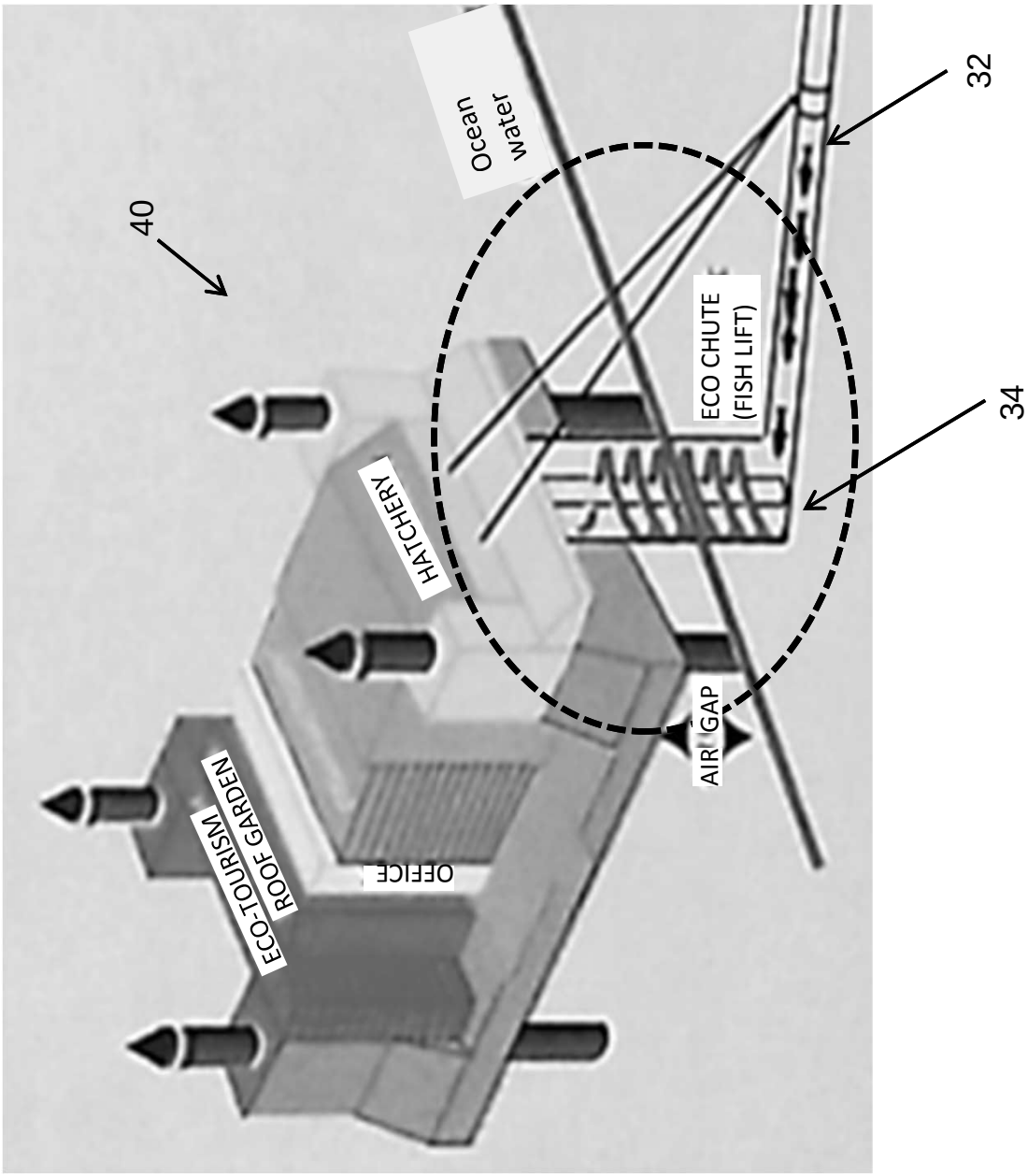
40
Ocean water
32
ECO CHUTE (FISH LIFT)
34
HATCHERY
AIR GAP
ECO-TOURISM ROOF GARDEN
OFFICE

Figure 15