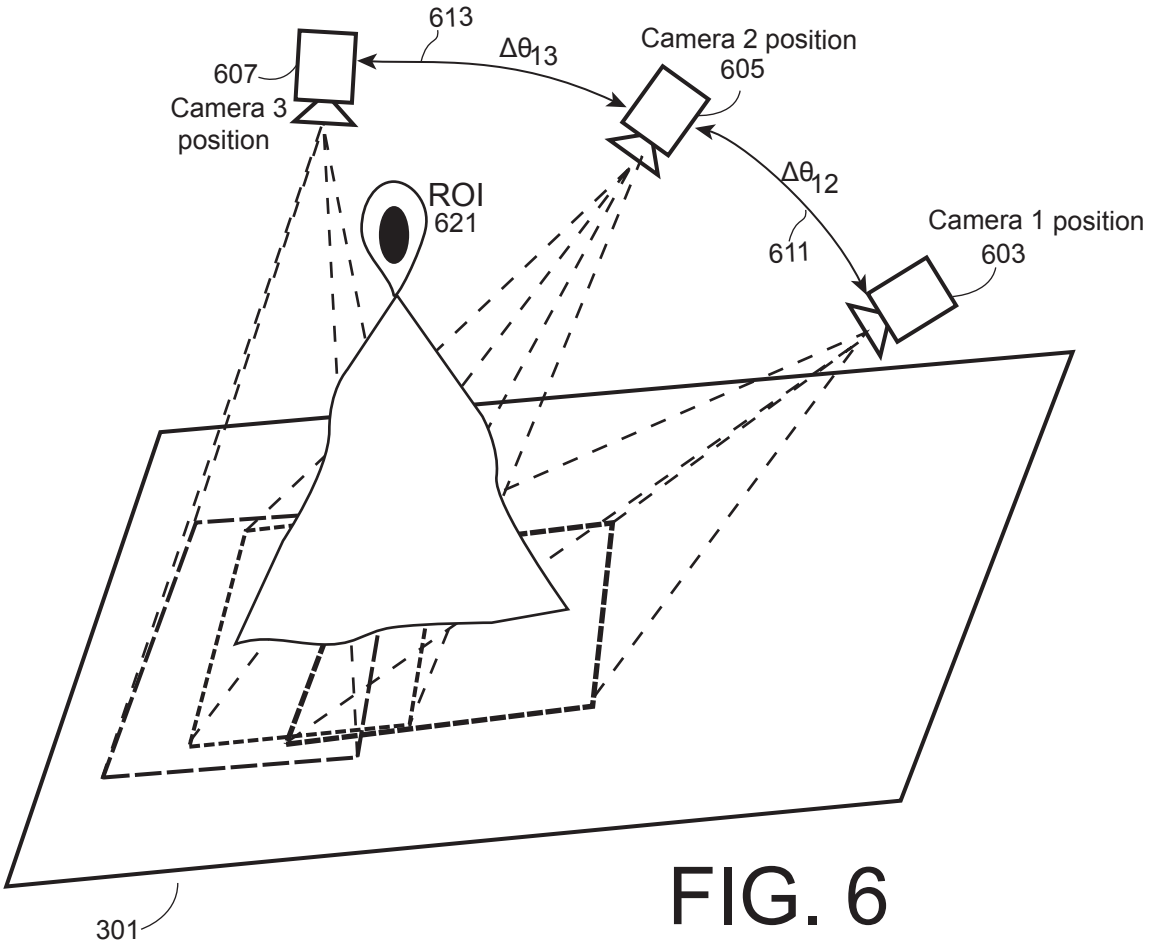
613
$\Delta\theta_{13}$
607
Camera 3
position
Camera 2 position
605
$\Delta\theta_{12}$
ROI
621
611
Camera 1 position
603
301

FIG. 6

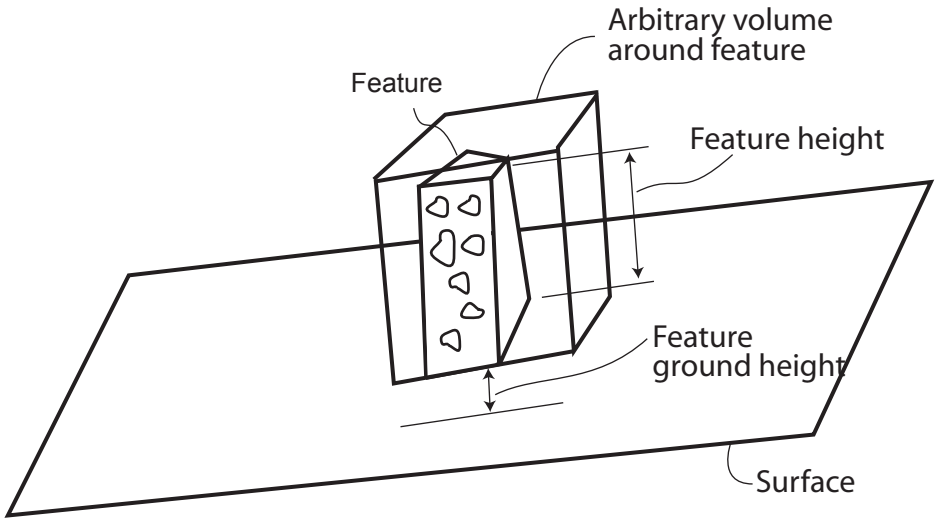
Arbitrary volume
around feature
Feature
Feature height
Feature
ground height
Surface

FIG. 7

```
// Photo sorting criteria:
//  ------------------------------------------------------------
// * Position: distance fron the desired position to meters
// * Heading: deviation fron given heading in degrees
//  * Pitch: deviation from given pitch in degrees
//
// Photos are given a score for each criteria.
// Scores can be positive or negative, sometines the goal is to have more
// deviation, sometimes less.
// Combined score for each photo determines sort order {higher scores first).

// eslist-disable-next-line  max-params
const photoScore = (photo, center, heading, pitch, weights =>  {
   const positionScore = getMetersFromCenter(photo, center) * weights.position;
   const headingScore = degreesFromHeading (photo, heading) * weights.heading;
   const pitchScore = angledifference(cameraPitch(photo), pitch) * weights.pitch;

return positlonScore + headingScore + pitchScore;
};

const bestPtoto = (center, heading, pitch, weights) => (photoA, photoB) => {
   const scoreA = photoScore(photoA, center, heading, pitch, weights);
   const scoreB = photoScore(photoB, center, heading, pitch, weights);

   return scoreB - scoreA;
};

export const SortByBestForThumbnailList = (photos, center, heading) => {
   const weights = {
     position: -1 / 100, // 1 point for every 100 meters from perfectly centered
     heading: -1 / 22.5, // -1 point for every 22.5 degrees of heading deviation
     pitch: 1 / 45 // +1 point for every 45 degrees of pitch deviation
   };

   const pitch  = 90; // camera pointing down, more deviation from this is better

   // using Array.from() to prevent modifying the original array
   return Array.from(photos).sort(bestPhoto(center, heading, pitch, weights));
};

export const sortByBestForRefinement = (photos, center, heading, pitch) => {
   const weights = {
     position: -1 / 200, // 1 point for every 200 meters from perfectly centered
     heading: -1 / 22.5, // -1 point for every 22.5 degrees of heading deviation
     pitch: 1 / 22.5 // +1 point for every 22.5 degrees of pitch deviation
   };

   // using Array.from() to prevent modifying the original array
   return Array.from(photos).sort{
     bestPhoto(center, heading, pitch, weights)
   };
};
```

FIG. 8

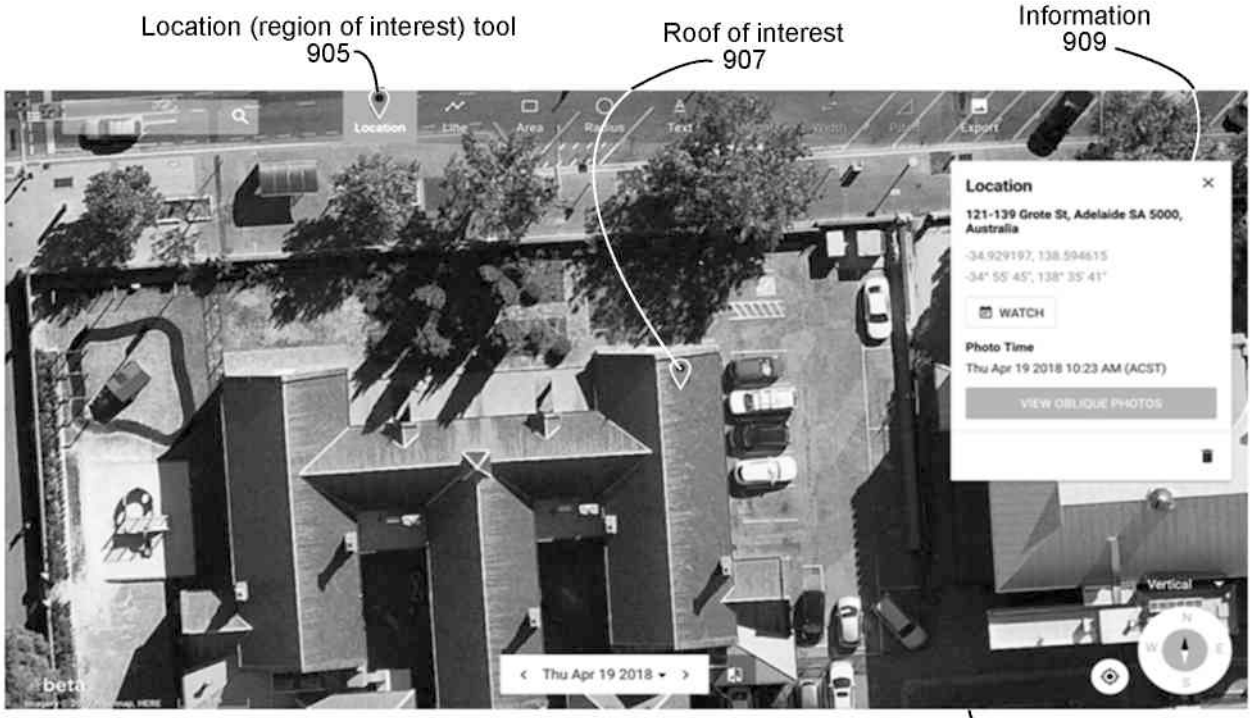
Location (region of interest) tool
905
Roof of interest
907
Information
909
Location
Line
Area
Radius
Text
Height
Width
Pitch
Export
Location
121-139 Grote St, Adelaide SA 5000, Australia
-34.929197, 138.594615
-34° 55' 45", 138° 35' 41"
WATCH
Photo Time
Thu Apr 19 2018 10:23 AM (ACST)
VIEW OBLIQUE PHOTOS
Vertical
Thu Apr 19 2018
903
Image with region of interest

FIG. 9

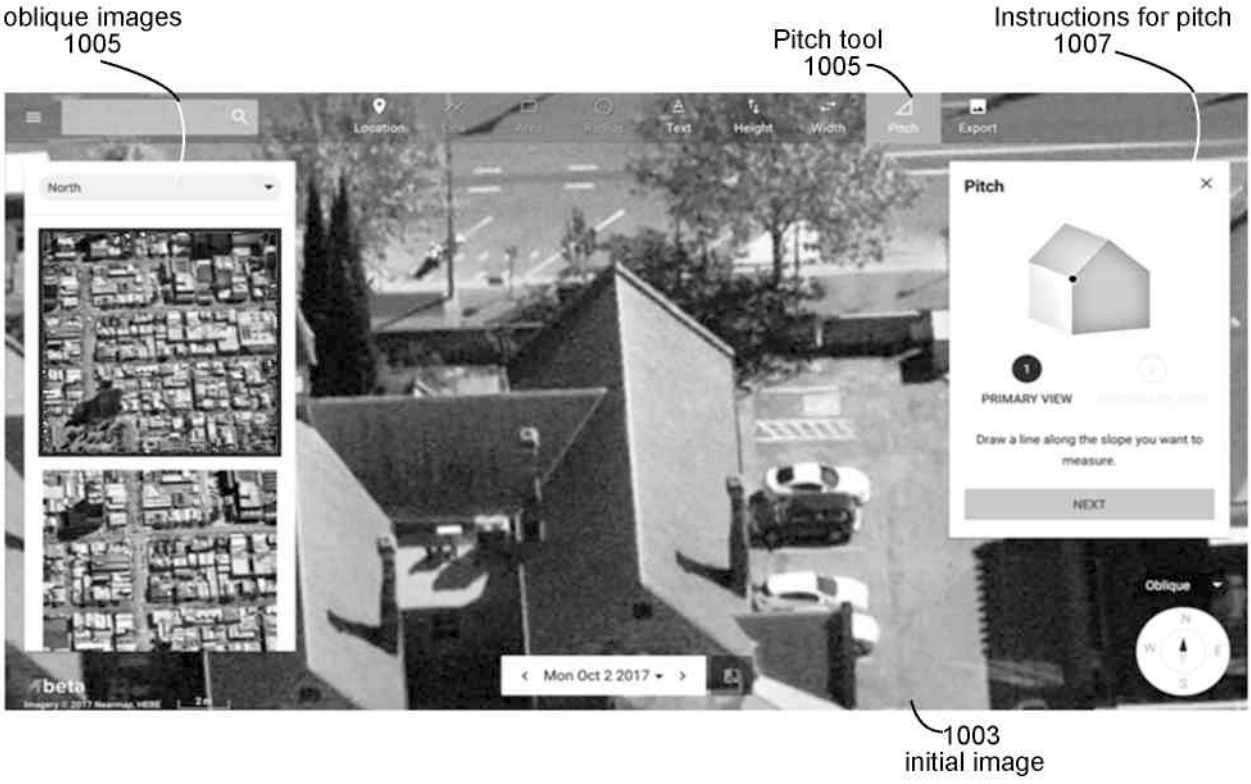
oblique images
1005
Pitch tool
1005
Instructions for pitch
1007
Location
Line
Area
Radius
Text
Height
Width
Pitch
Export
North
Pitch
PRIMARY VIEW
Draw a line along the slope you want to measure.
NEXT
Oblique
Mon Oct 2 2017
1003
initial image

FIG. 10

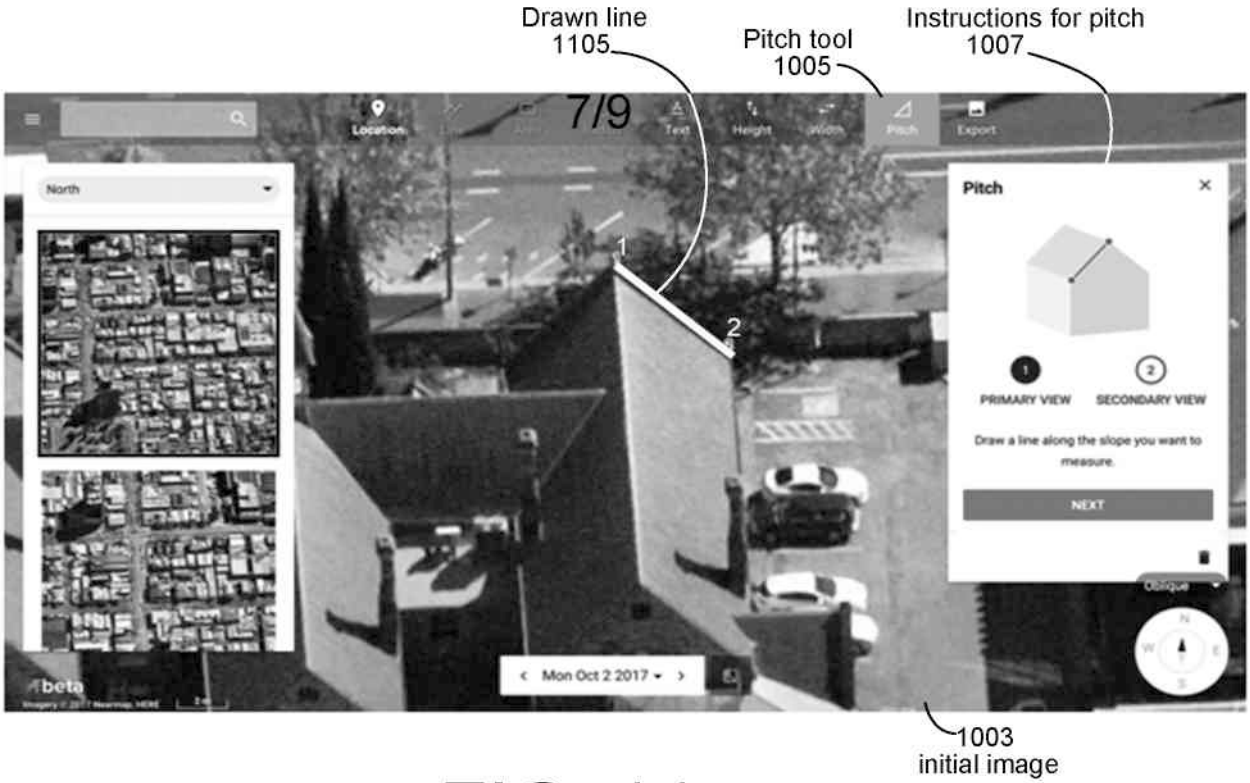
Drawn line
1105
Pitch tool
1005
Instructions for pitch
1007
7/9
Location
Text
Height
Pitch
Export
North
Pitch
PRIMARY VIEW
SECONDARY VIEW
Draw a line along the slope you want to measure.
NEXT
Oblique
Mon Oct 2 2017
beta
1003
initial image

FIG. 11

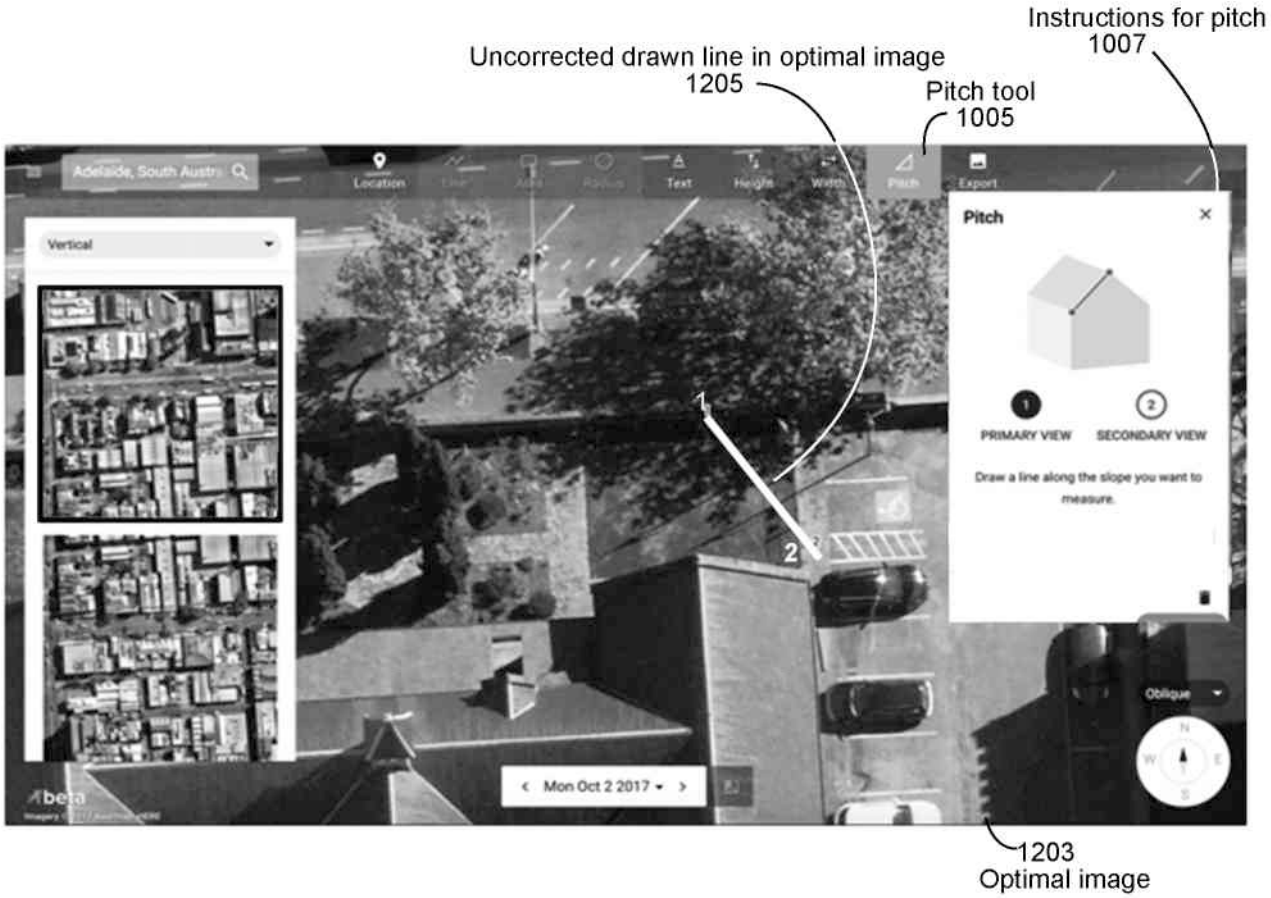
Instructions for pitch
1007
Uncorrected drawn line in optimal image
1205
Pitch tool
1005
Adelaide, South Austr
Location
Text
Height
Pitch
Export
Vertical
Pitch
PRIMARY VIEW
SECONDARY VIEW
Draw a line along the slope you want to measure.
Oblique
Mon Oct 2 2017
beta
1203
Optimal image

FIG. 12

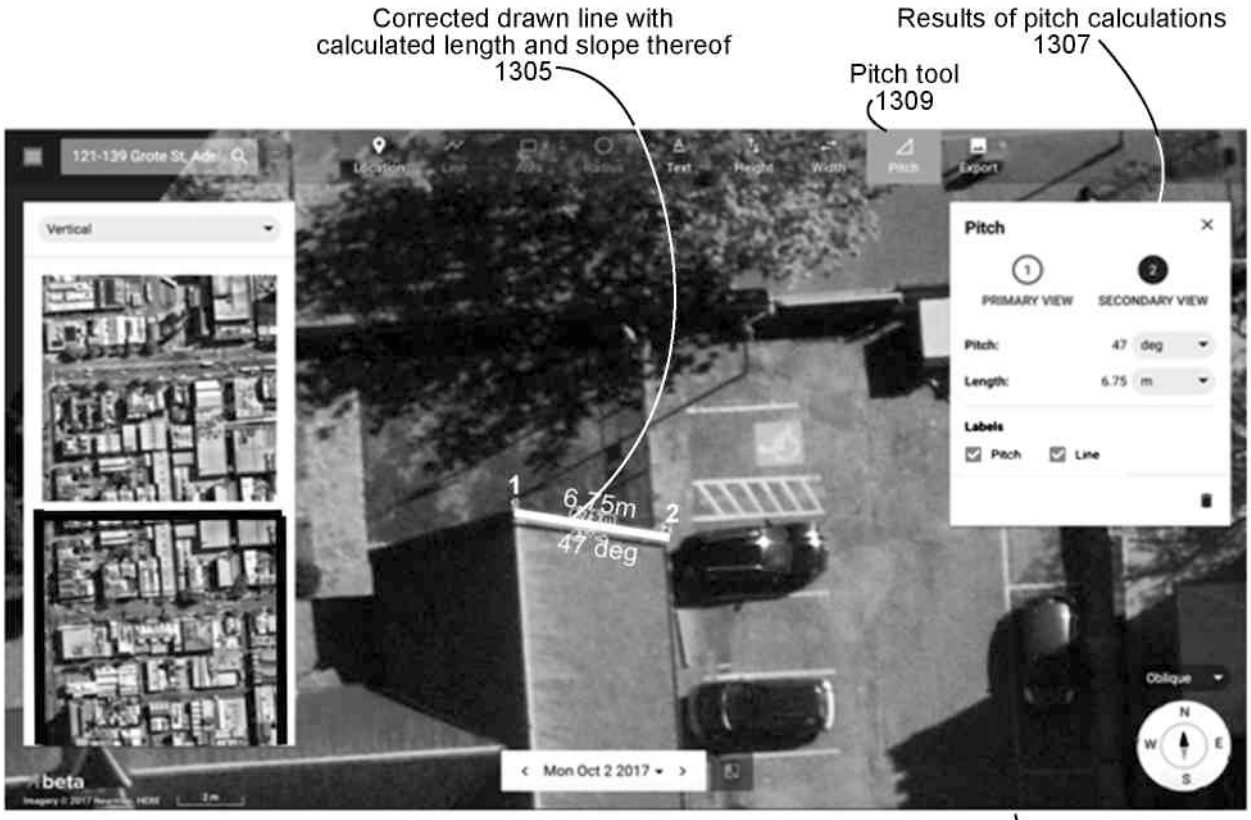
Corrected drawn line with calculated length and slope thereof
1305
Results of pitch calculations
1307
Pitch tool
1309
121-139 Grote St, Ade
Vertical
Pitch
PRIMARY VIEW
SECONDARY VIEW
Pitch: 47 deg
Length: 6.75 m
Labels
Pitch
Line
1
6.75m
47 deg
2
Oblique
N
W
E
S
beta
Mon Oct 2 2017
1303
Optimal image

FIG. 13