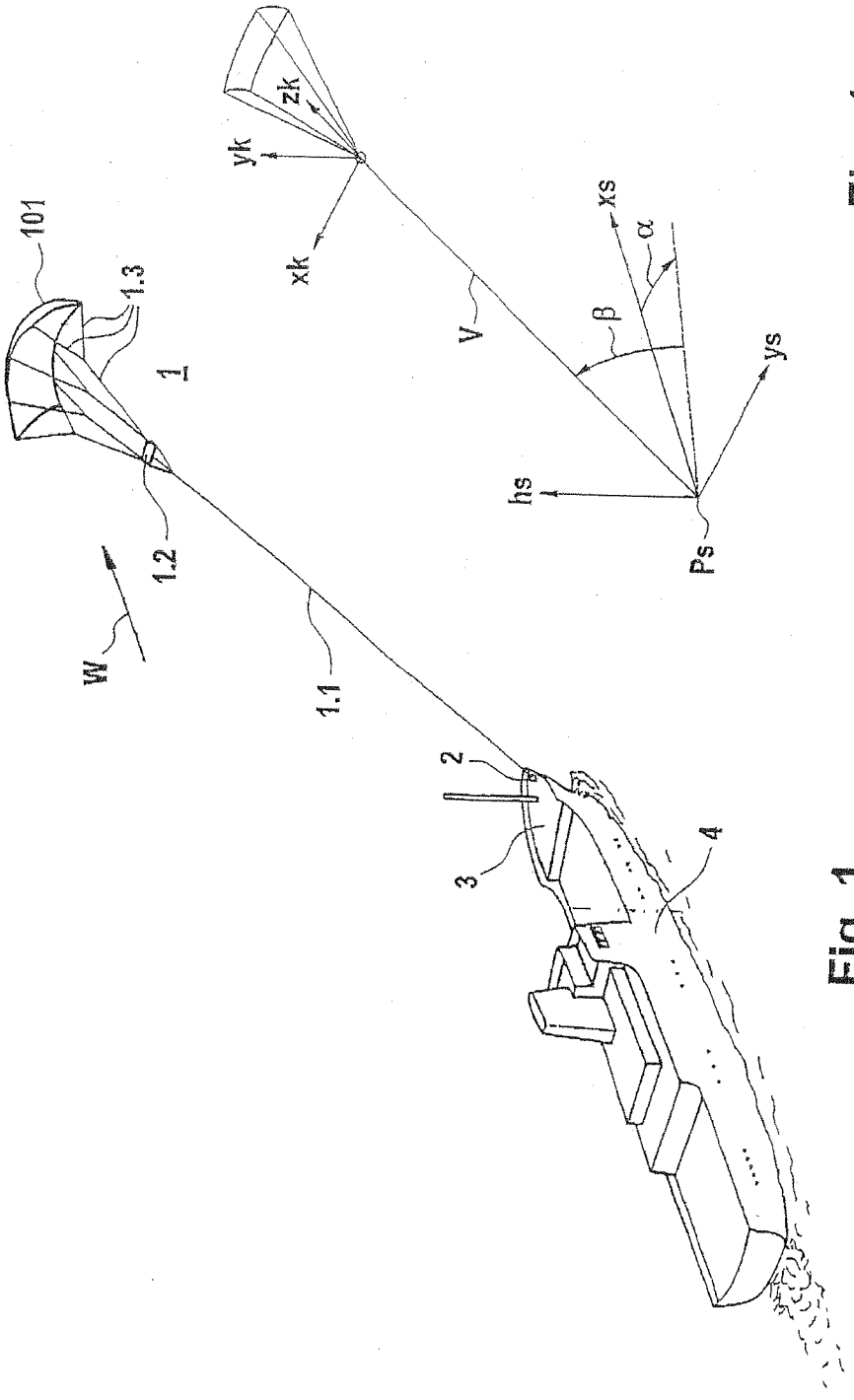

Fig. 1a

Fig. 1

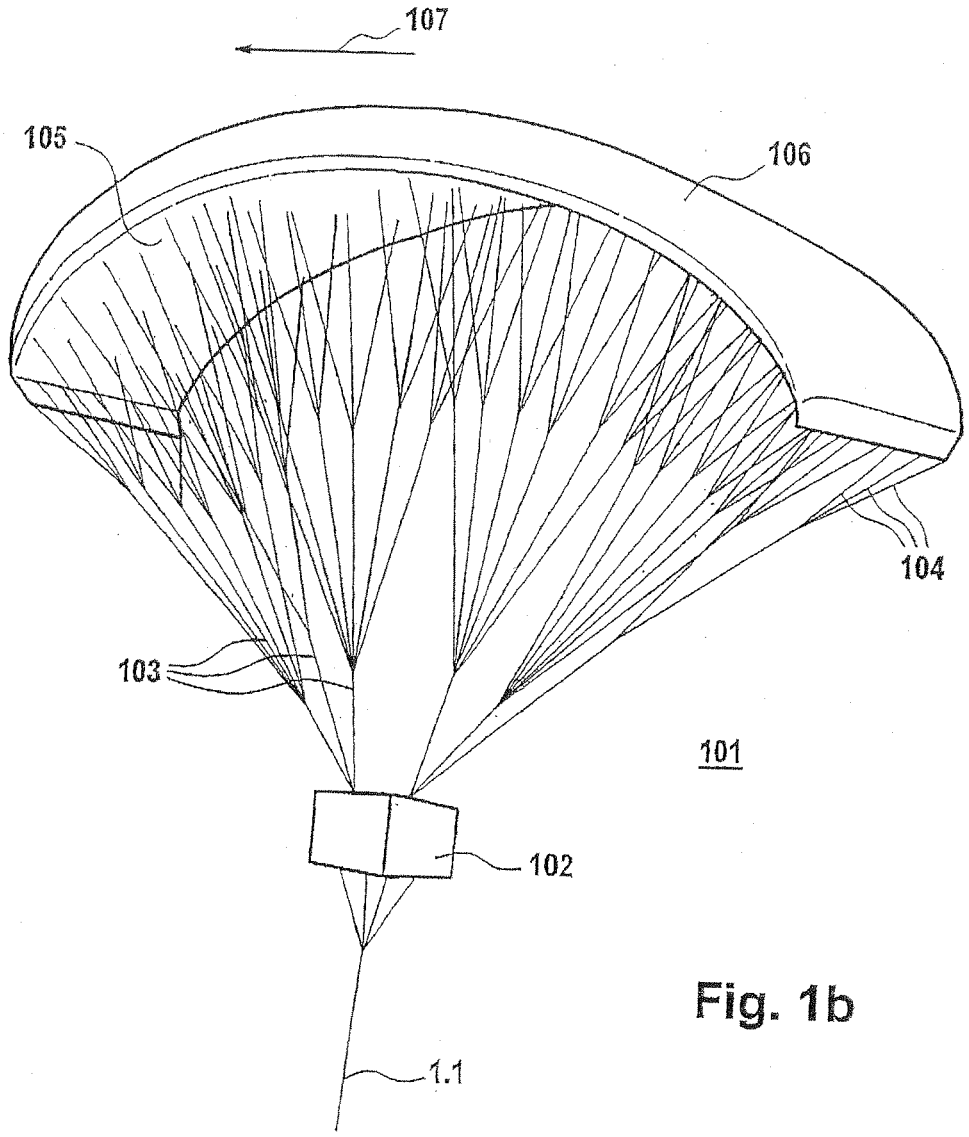

Fig. 1b

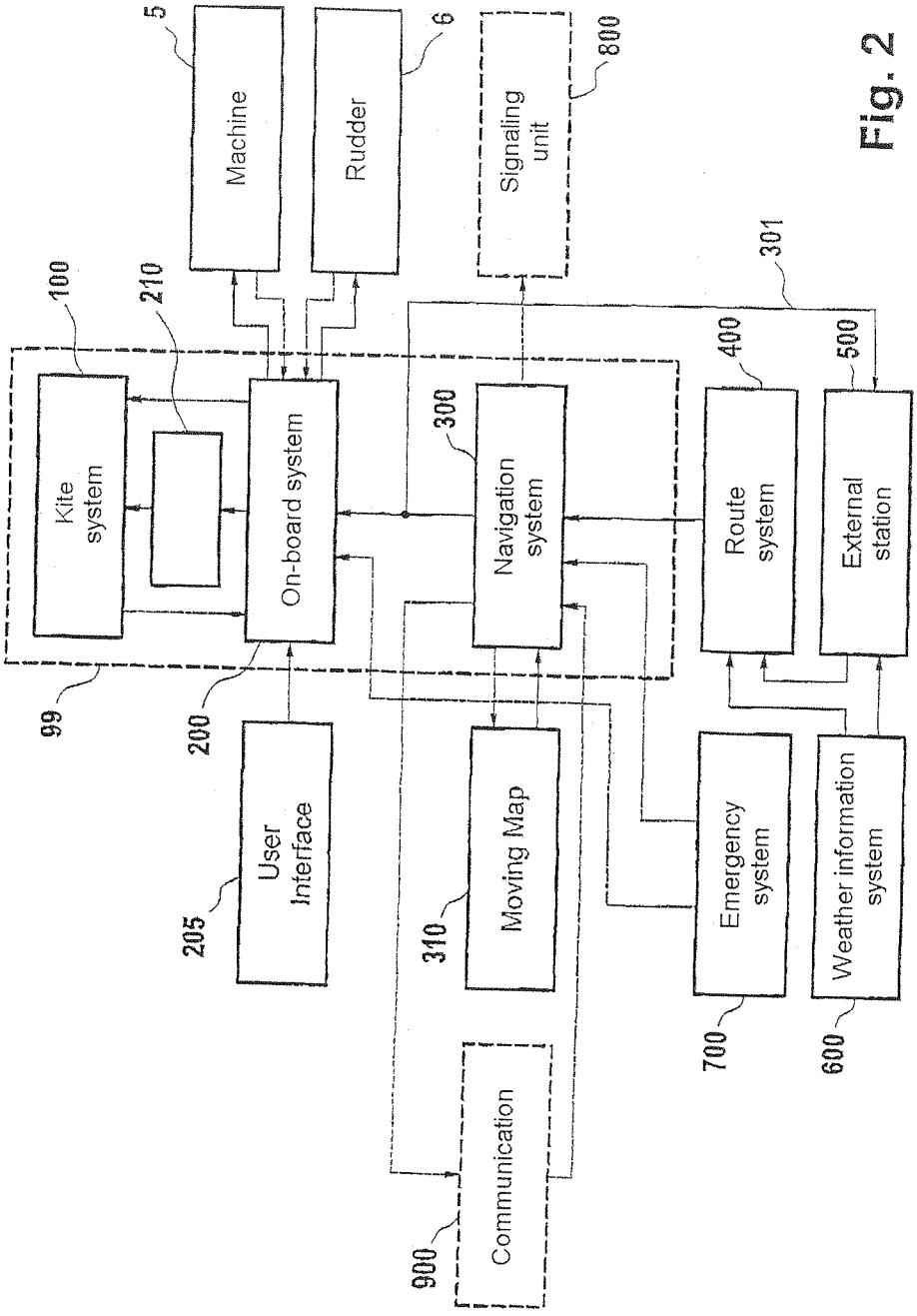
5
Machine
6
Rudder
800
Signaling unit
301
100
210
Kite system
On-board system
300
Navigation system
400
Route system
500
External station
99
200
205
User Interface
310
Moving Map
Emergency system
700
Weather information system
600
900
Communication

Fig. 2

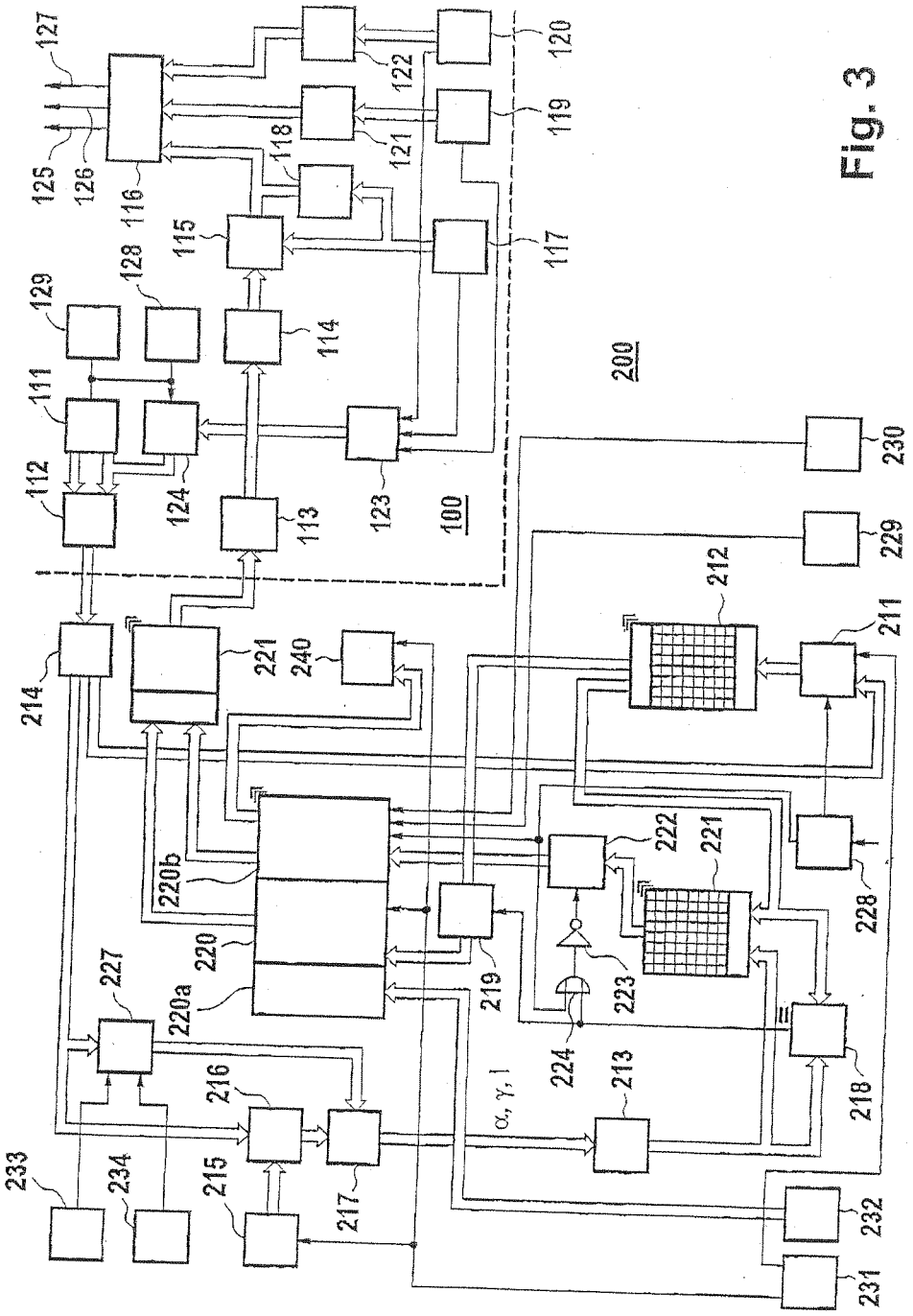
127
125
126
116
118
121
122
120
119
115
117
128
129
114
111
112
124
113
123
100
200
230
229
212
211
214
221
240
222
221
220b
220
220a
227
219
223
224
228
218
216
217
213
α, γ, l
233
234
215
232
231

Fig. 3

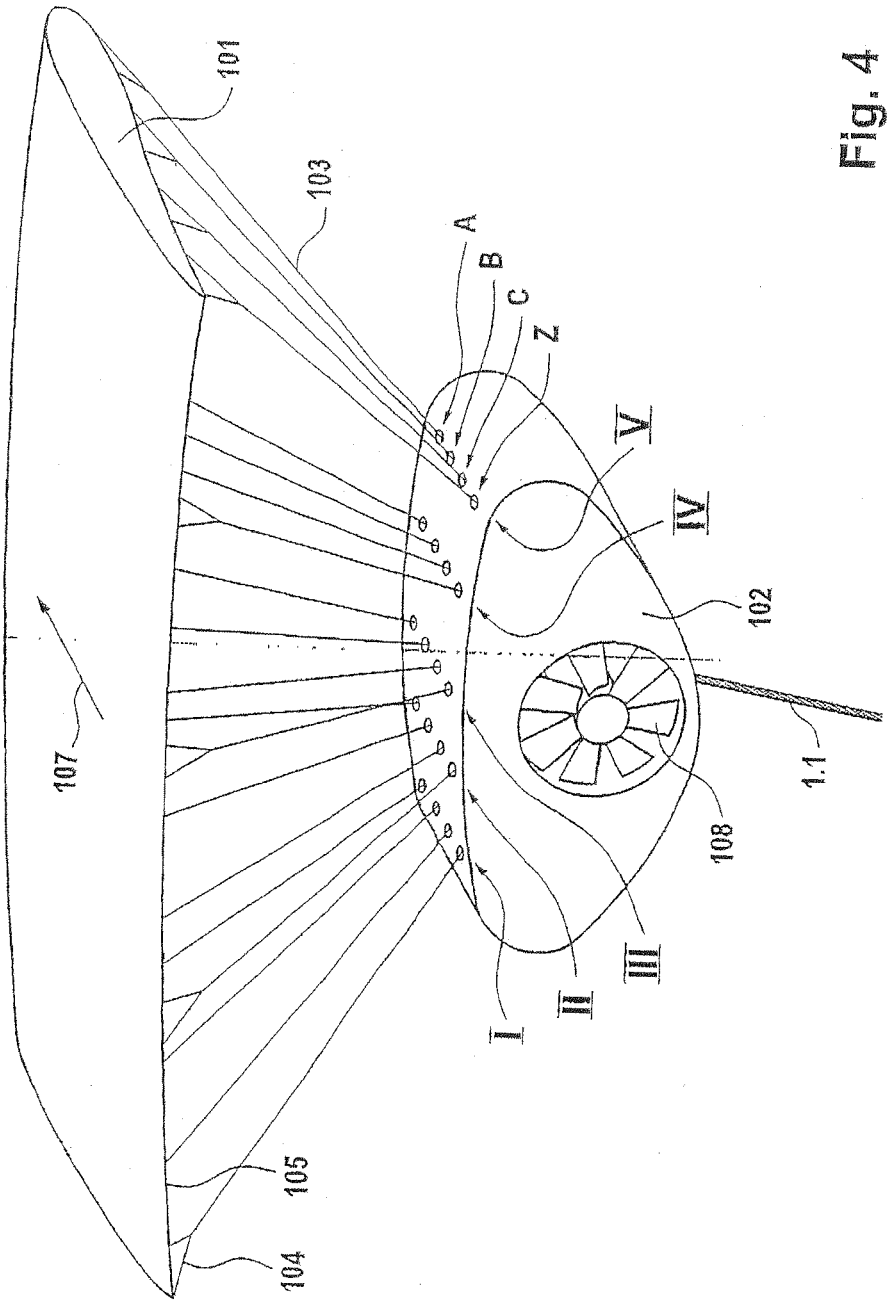

Fig. 4

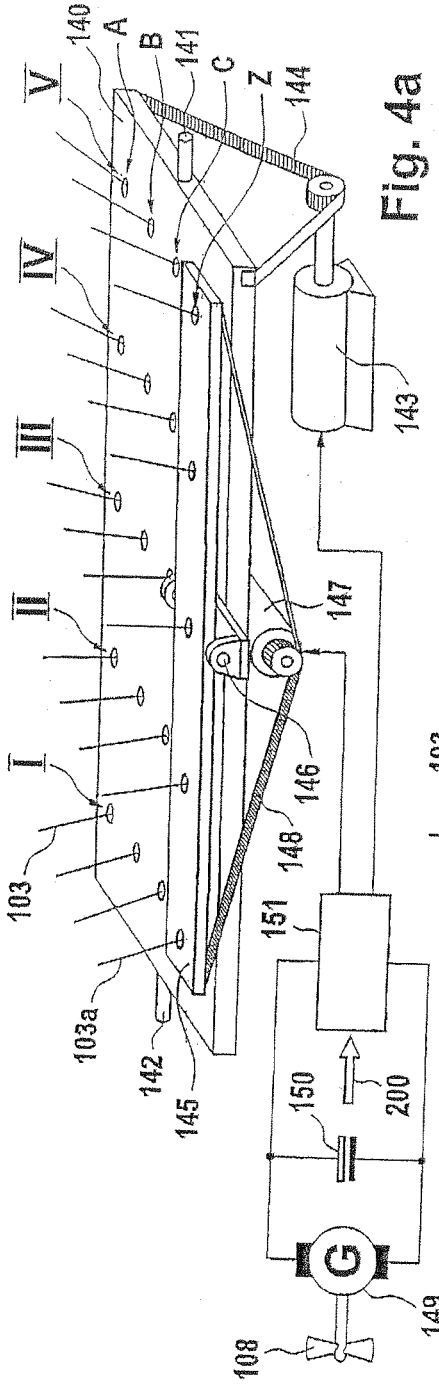
V
IV
III
II
I
140
A
B
141
C
Z
144
143
147
146
148
151
103
103a
142
145
150
200
G
149
108

Fig. 4a

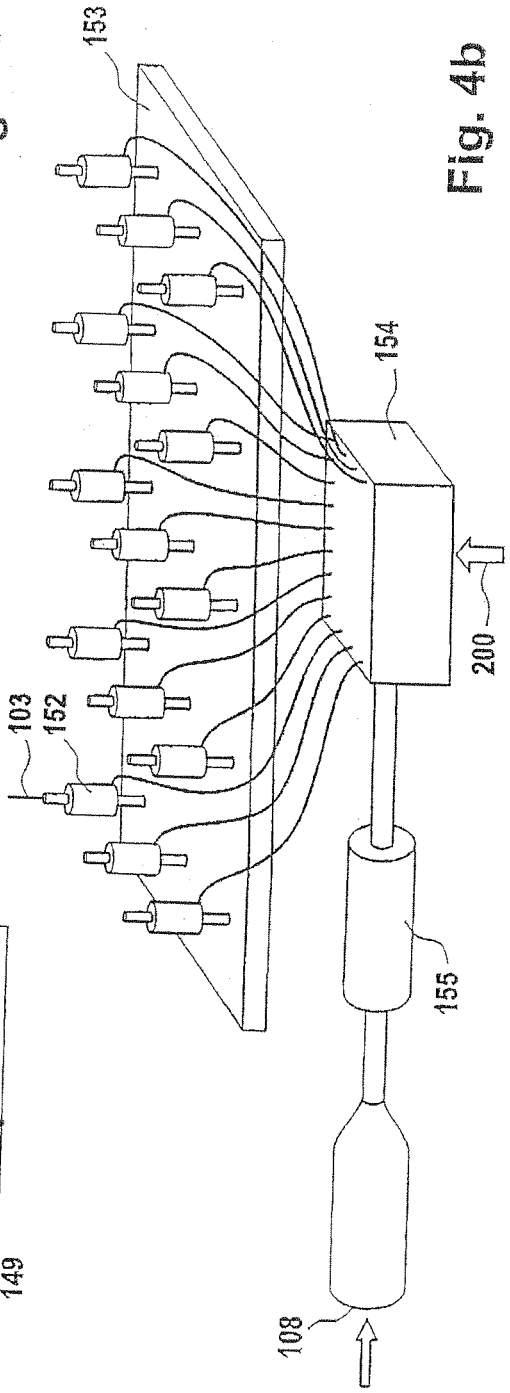
153
154
200
103
152
155
108

Fig. 4b

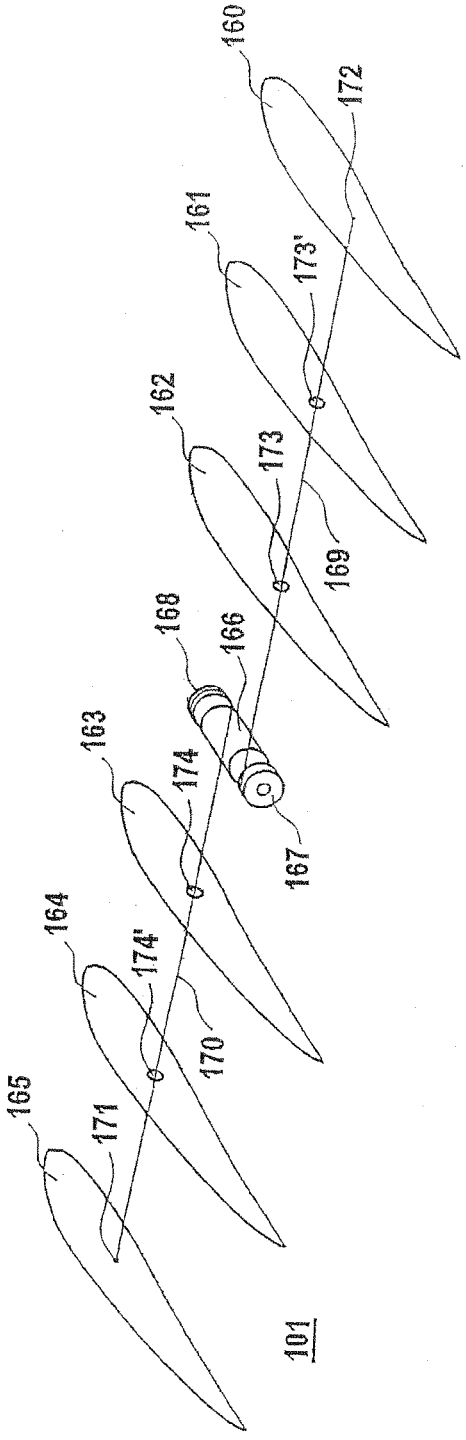
160
172
161
173'
162
173
169
168
166
163
174
167
164
174'
170
165
171
101

Fig. 4c

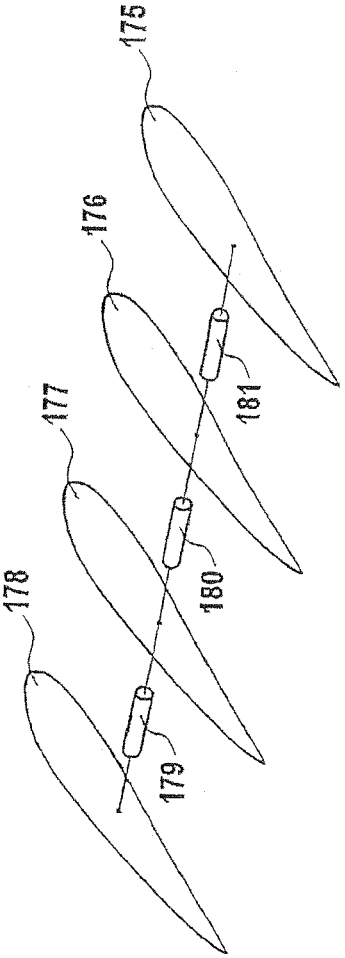
175
176
177
181
178
180
179

Fig. 4d