FIG.1

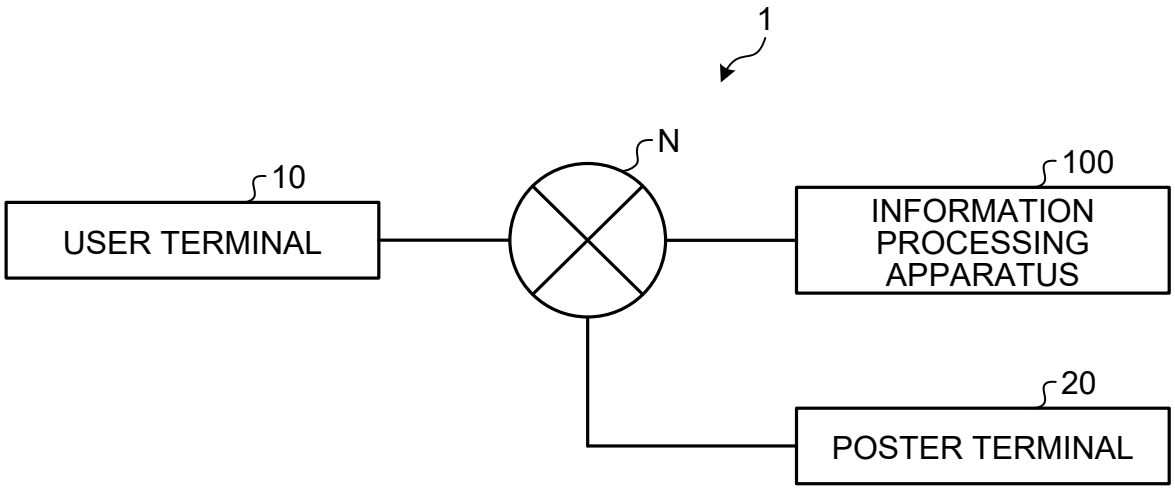
1
N
10
USER TERMINAL
100
INFORMATION PROCESSING APPARATUS
20
POSTER TERMINAL

FIG.2

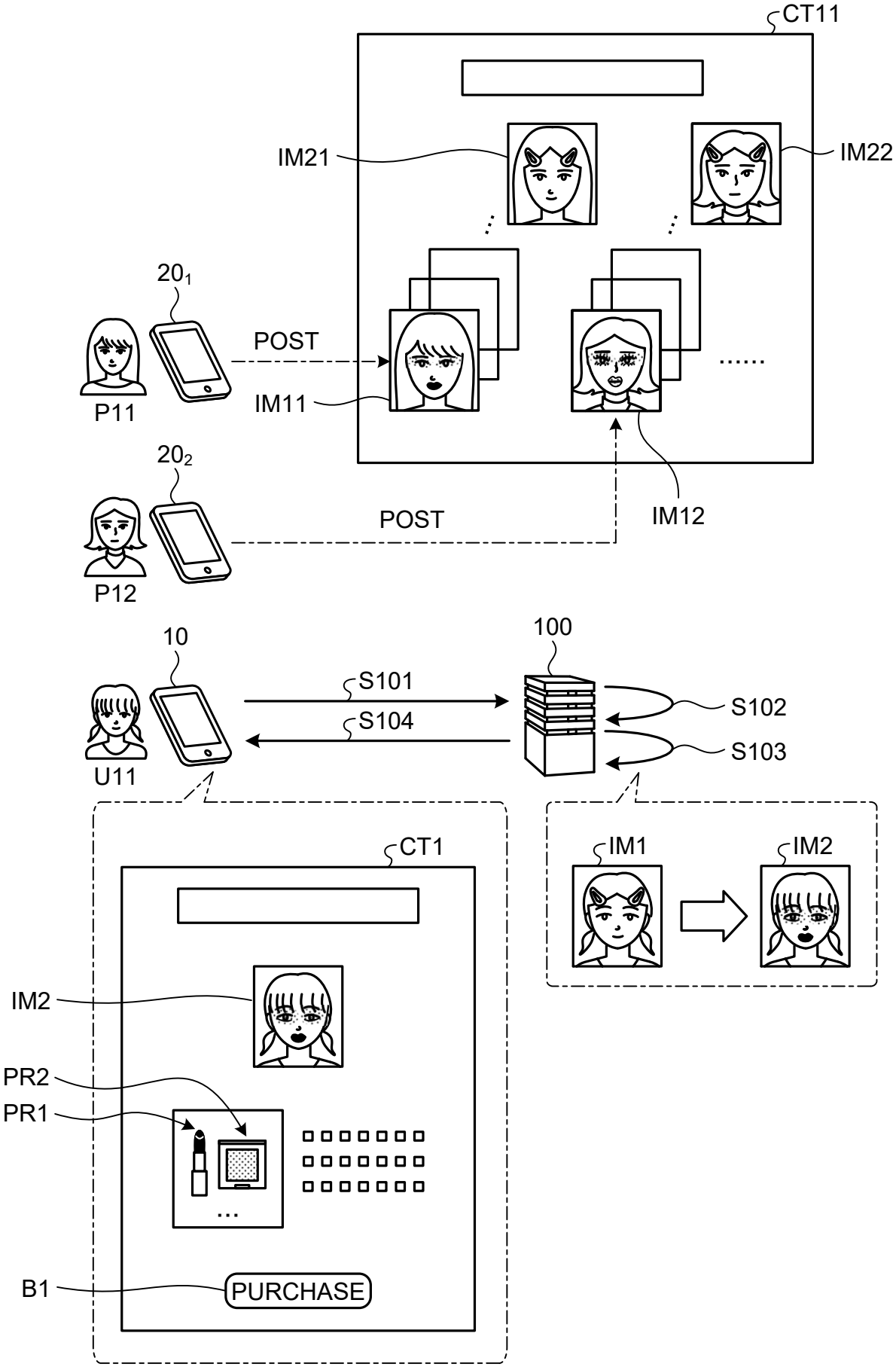
CT11
IM21
IM22
20₁
POST
P11
IM11
20₂
POST
IM12
P12
10
100
S101
S104
S102
S103
U11
CT1
IM1
IM2
IM2
PR2
PR1
B1
PURCHASE

FIG.3

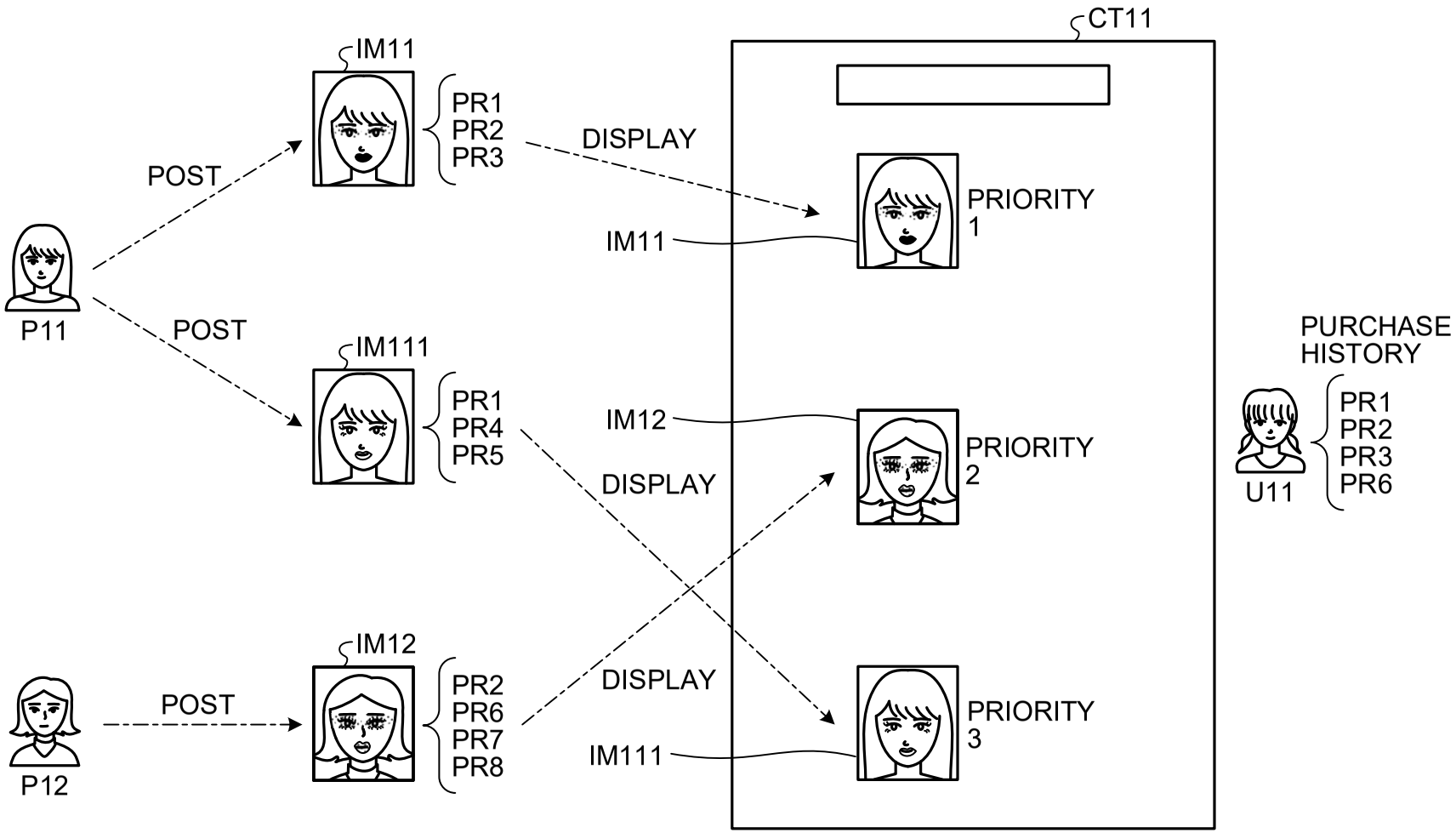
CT11
IM11
PR1
PR2
PR3
DISPLAY
POST
PRIORITY 1
IM11
P11
POST
IM111
PR1
PR4
PR5
IM12
DISPLAY
PRIORITY 2
PURCHASE HISTORY
U11
PR1
PR2
PR3
PR6
IM12
PR2
PR6
PR7
PR8
DISPLAY
POST
P12
IM111
PRIORITY 3

FIG.4

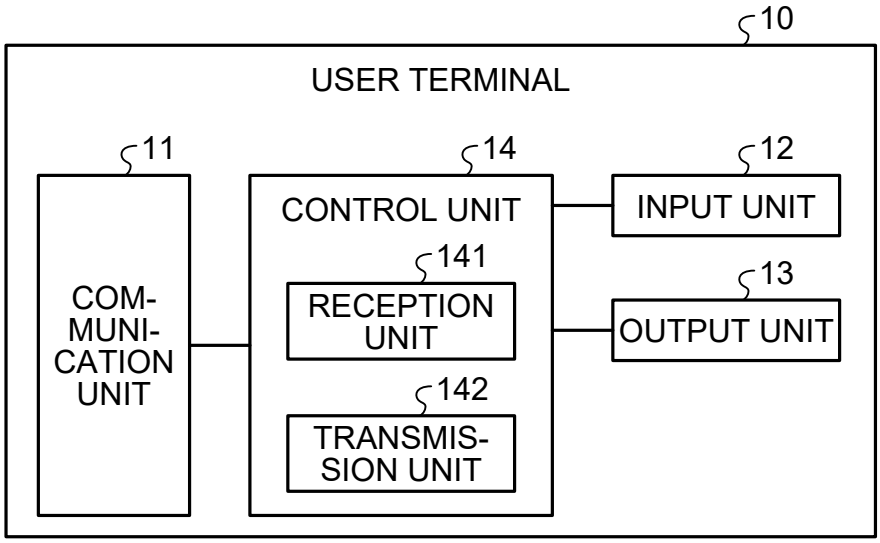
10
USER TERMINAL
11
COM-
MUNI-
CATION
UNIT
14
CONTROL UNIT
141
RECEPTION
UNIT
142
TRANSMIS-
SION UNIT
12
INPUT UNIT
13
OUTPUT UNIT

FIG.5

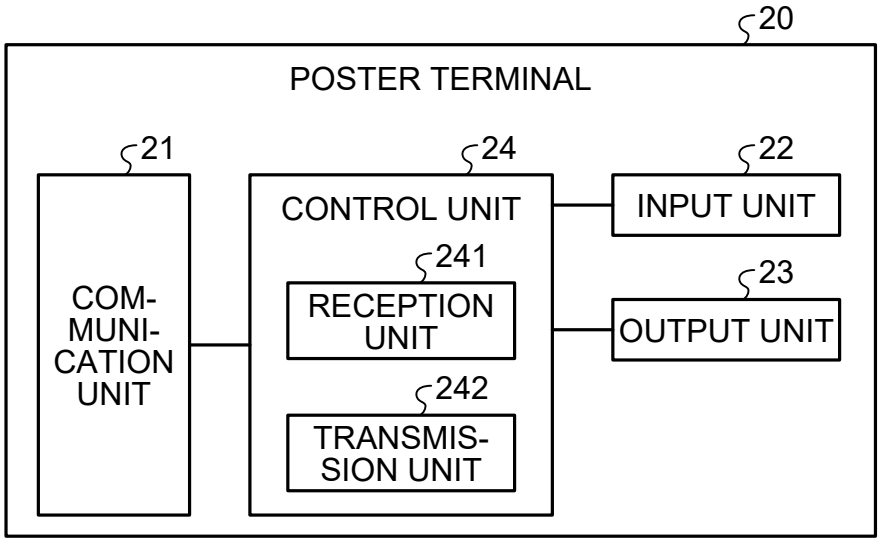
20
POSTER TERMINAL
21
COM-
MUNI-
CATION
UNIT
24
CONTROL UNIT
241
RECEPTION
UNIT
242
TRANSMIS-
SION UNIT
22
INPUT UNIT
23
OUTPUT UNIT

FIG.6

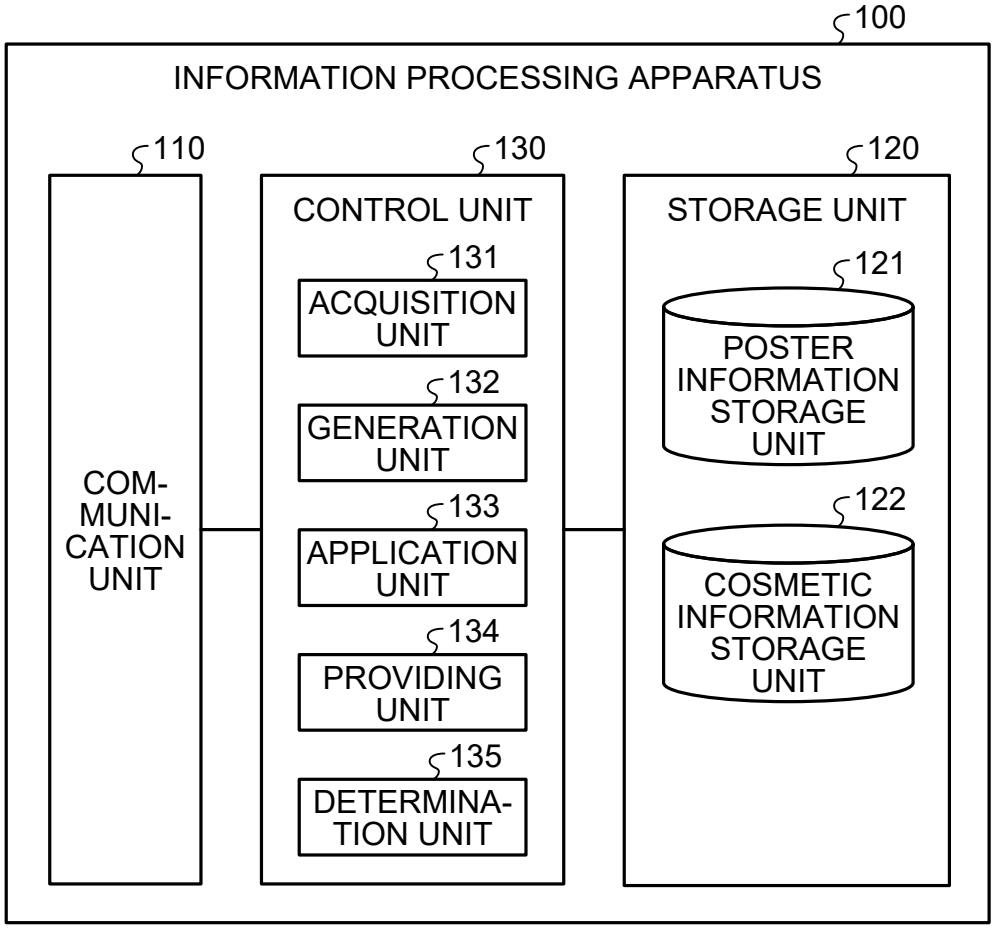

FIG.7

121

POSTER ID	FACE IMAGE	...
P11	FACE IMAGE #11	...
P12	FACE IMAGE #22	...
...	...	...

FIG.8

122

POSTER ID	FACE IMAGE	SET OF COSMETIC PRODUCTS	…
P11	FACE IMAGE #21	PRODUCT A1 (LIPSTICK) OF BRAND ○○, PRODUCT A2 (FOUNDATION) OF BRAND ××, …	…
P12	FACE IMAGE #22	…	…
…	…	…	…

FIG.9

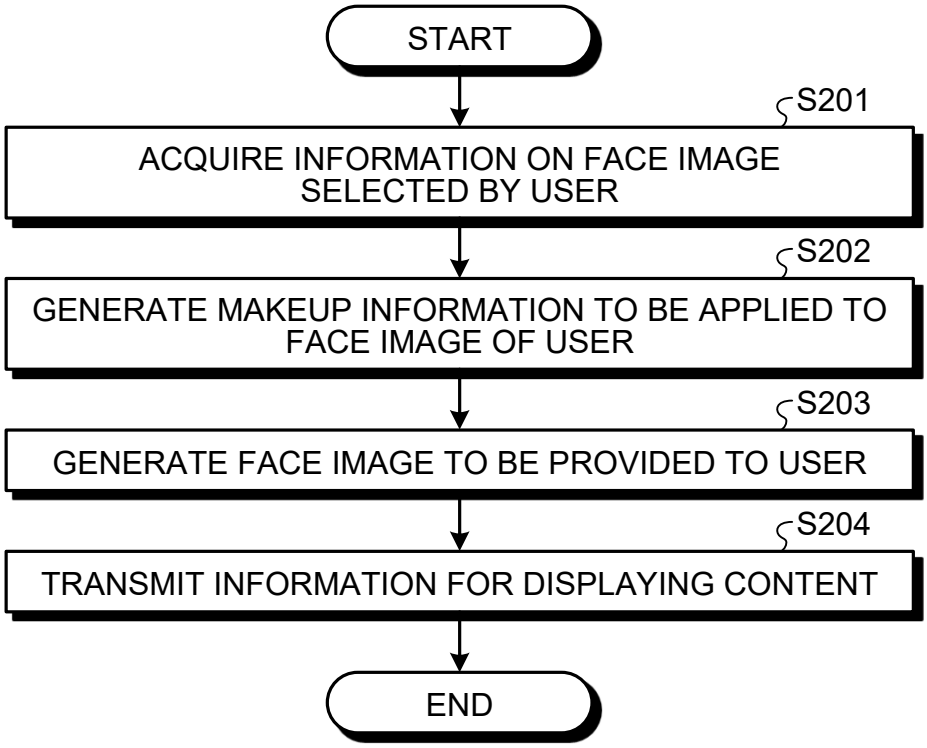

FIG.10

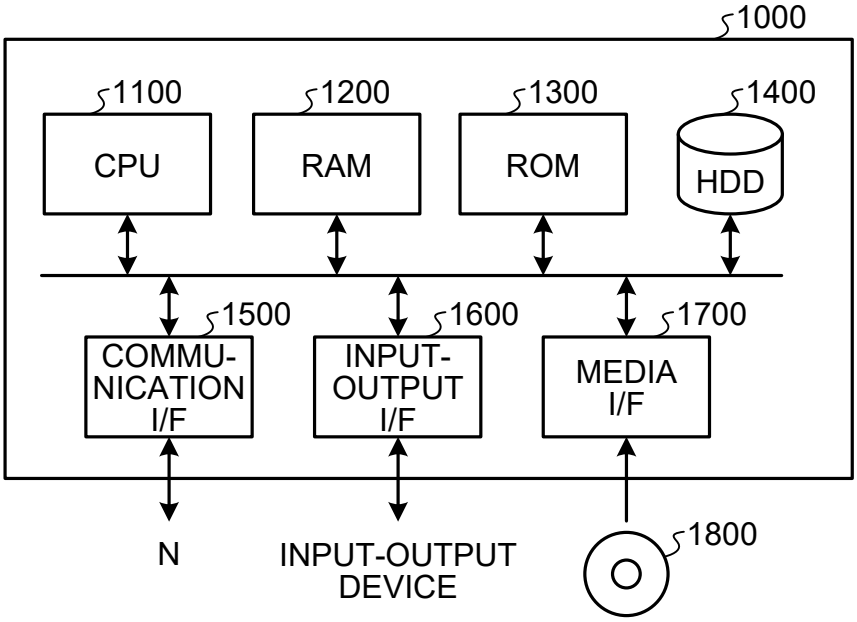
1000
1100
CPU
1200
RAM
1300
ROM
1400
HDD
1500
COMMU-
NICATION
I/F
1600
INPUT-
OUTPUT
I/F
1700
MEDIA
I/F
N
INPUT-OUTPUT
DEVICE
1800