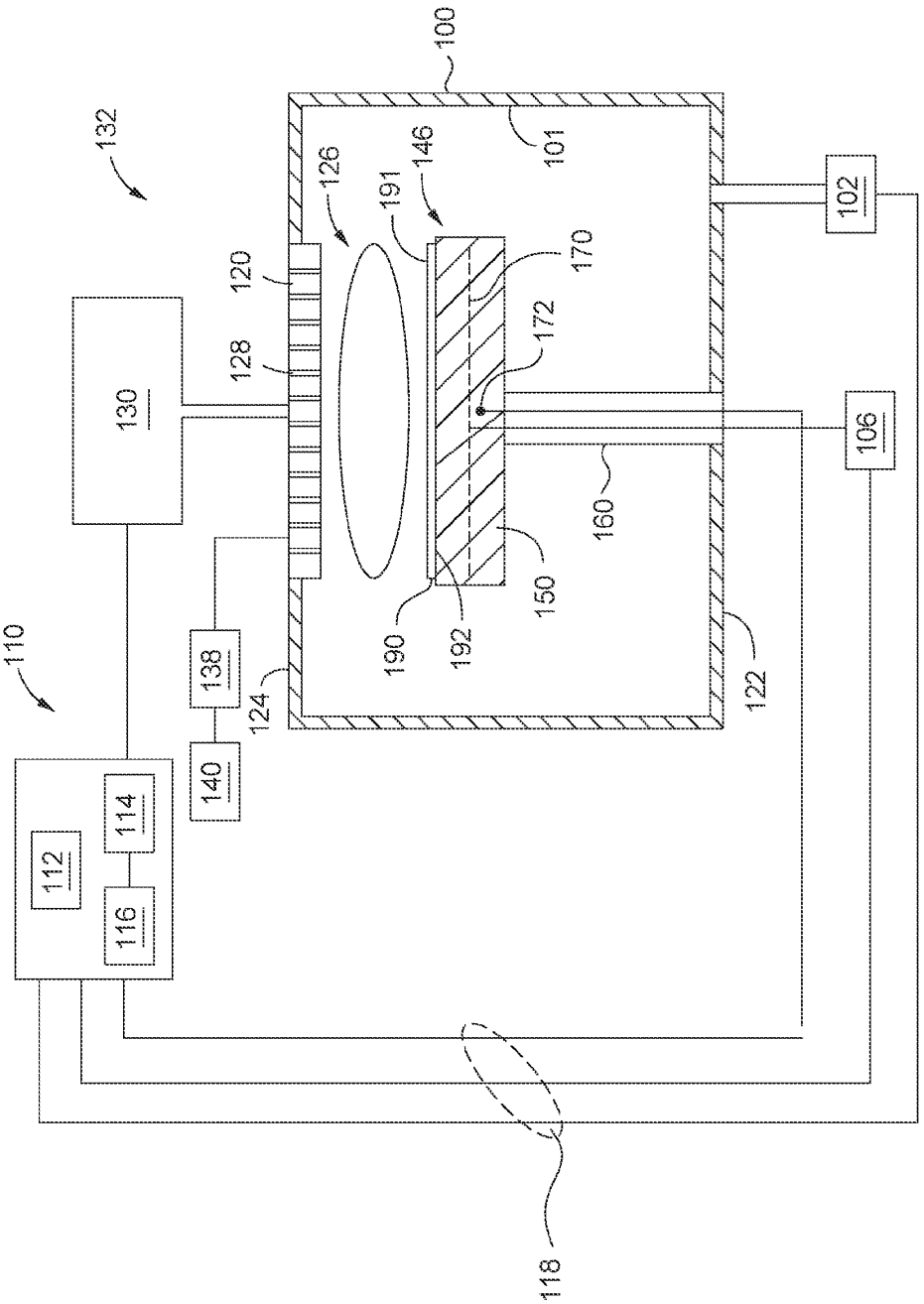
100
101
102
106
110
112
114
116
118
120
122
124
126
128
130
132
138
140
146
150
160
170
172
190
191
192

FIG. 1A

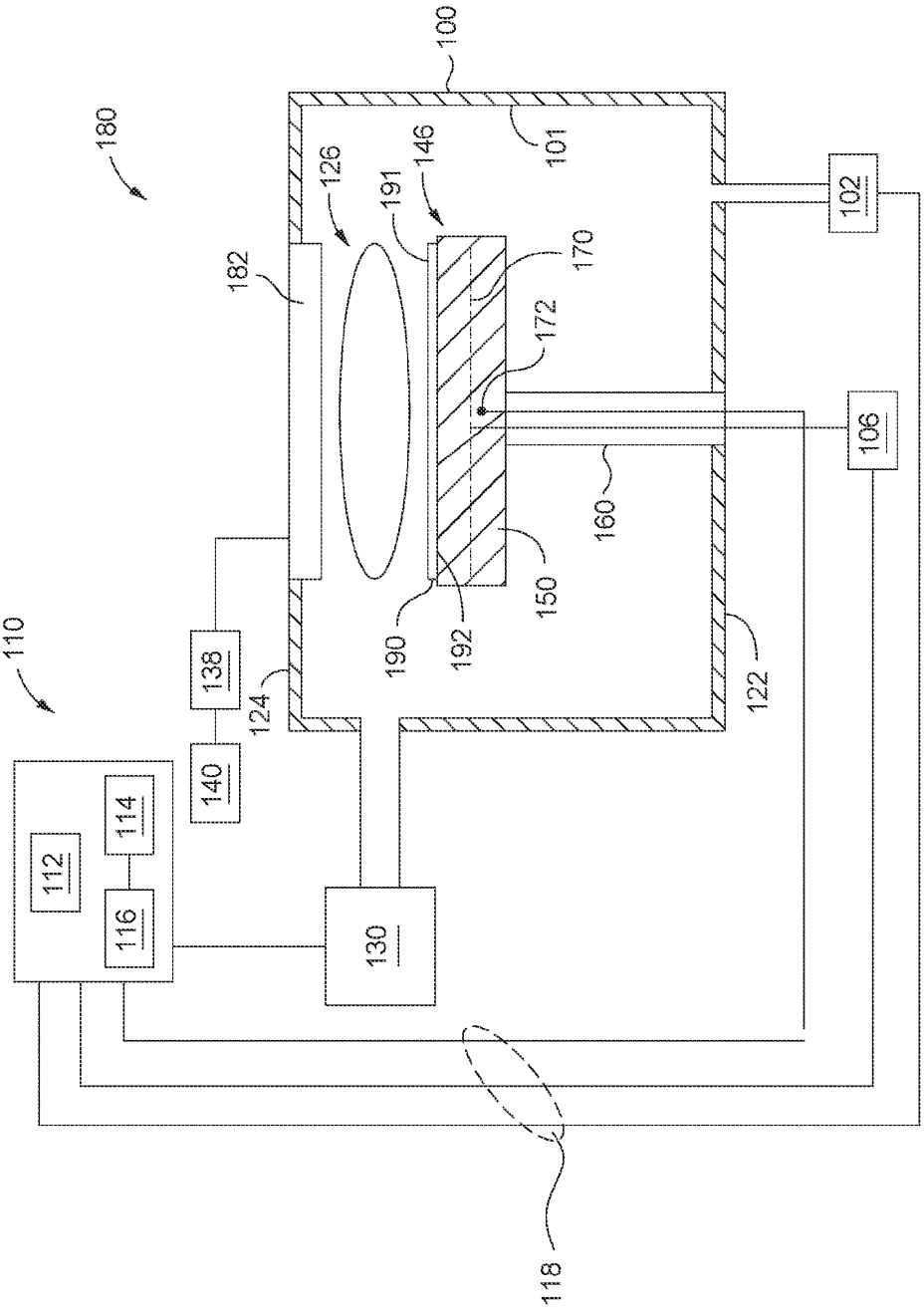
100
101
102
106
110
112
114
116
118
122
124
126
130
138
140
146
150
160
170
172
180
182
190
191
192

FIG. 1B

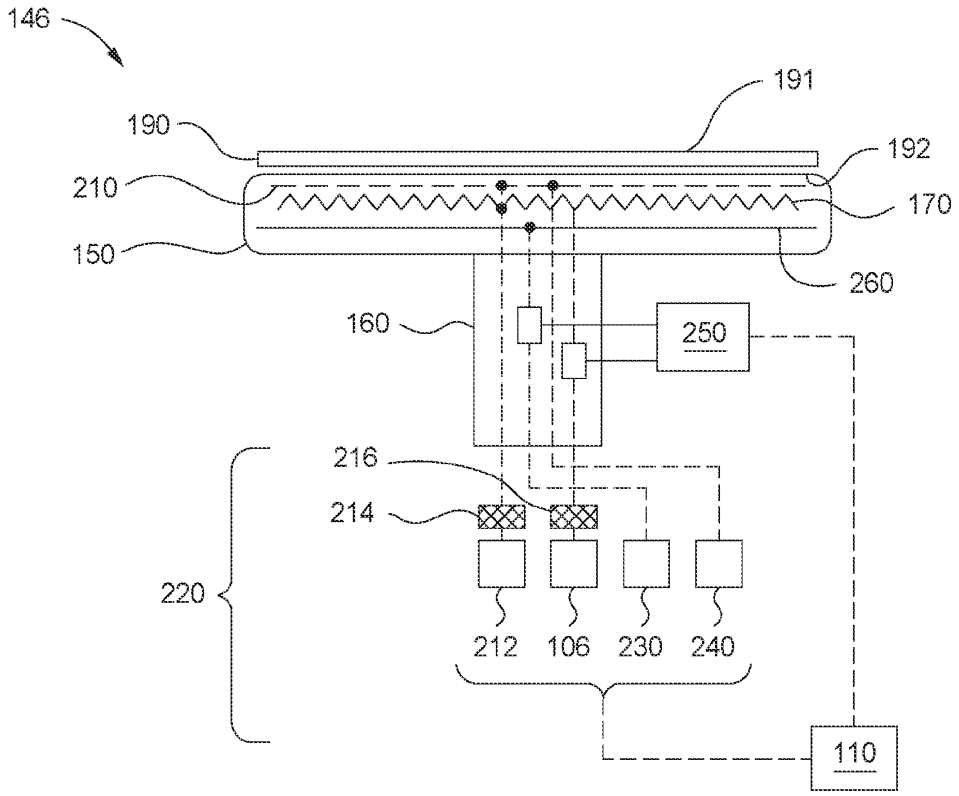
146
191
190
192
210
170
150
260
160
250
216
214
220
212
106
230
240
110

FIG. 2

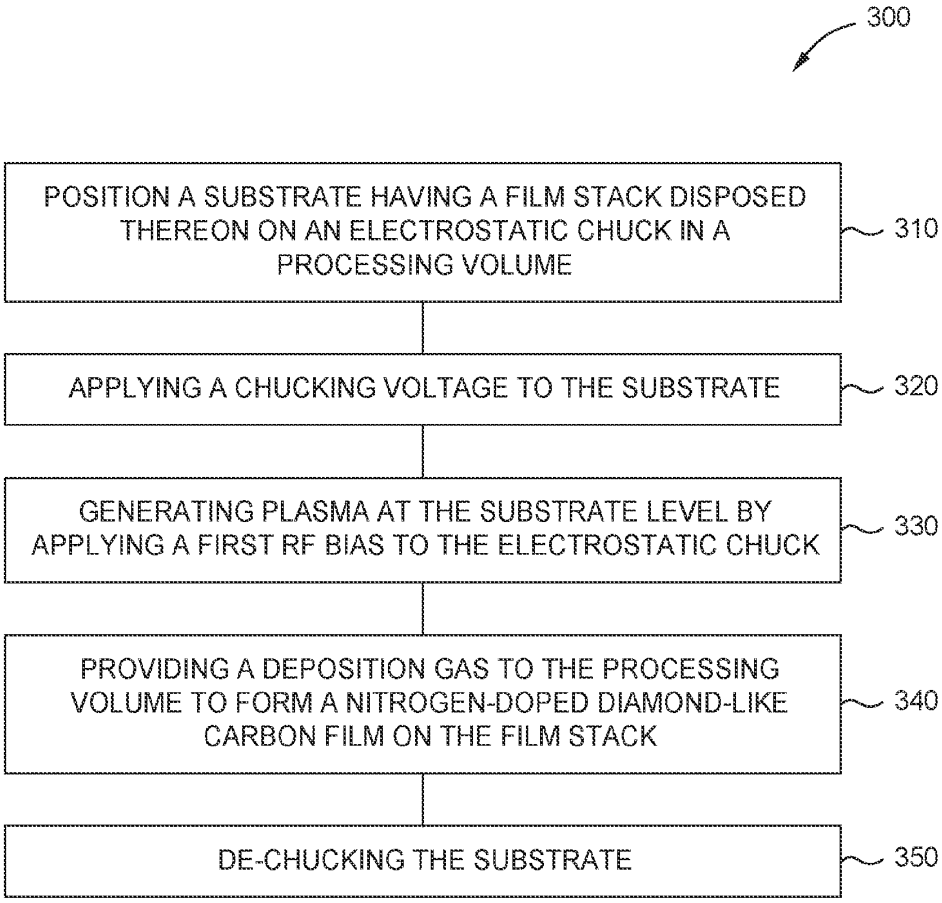
300
POSITION A SUBSTRATE HAVING A FILM STACK DISPOSED THEREON ON AN ELECTROSTATIC CHUCK IN A PROCESSING VOLUME
310
APPLYING A CHUCKING VOLTAGE TO THE SUBSTRATE
320
GENERATING PLASMA AT THE SUBSTRATE LEVEL BY APPLYING A FIRST RF BIAS TO THE ELECTROSTATIC CHUCK
330
PROVIDING A DEPOSITION GAS TO THE PROCESSING VOLUME TO FORM A NITROGEN-DOPED DIAMOND-LIKE CARBON FILM ON THE FILM STACK
340
DE-CHUCKING THE SUBSTRATE
350

FIG. 3

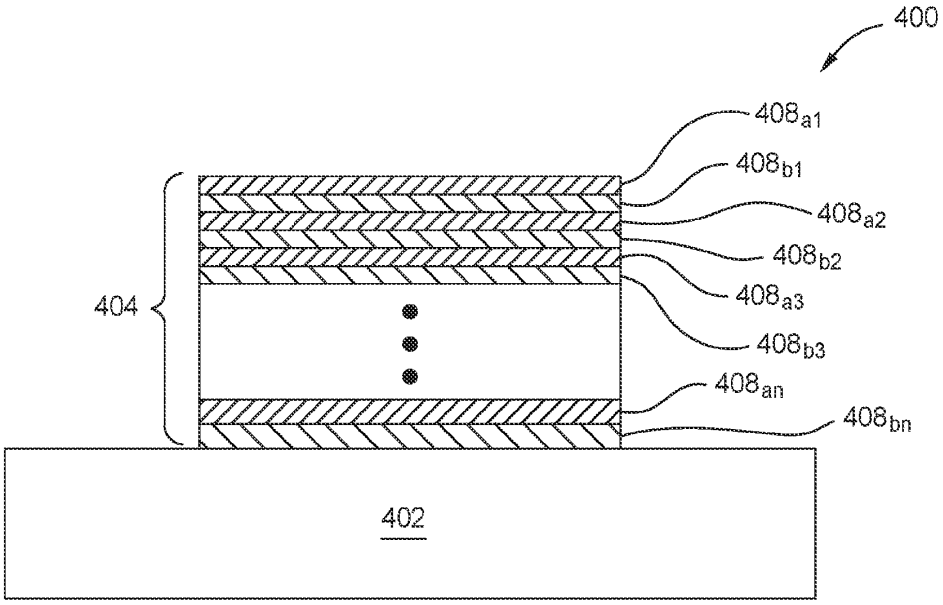
400
408_{a1}
408_{b1}
408_{a2}
408_{b2}
408_{a3}
408_{b3}
408_{an}
408_{bn}
404
402

FIG. 4A

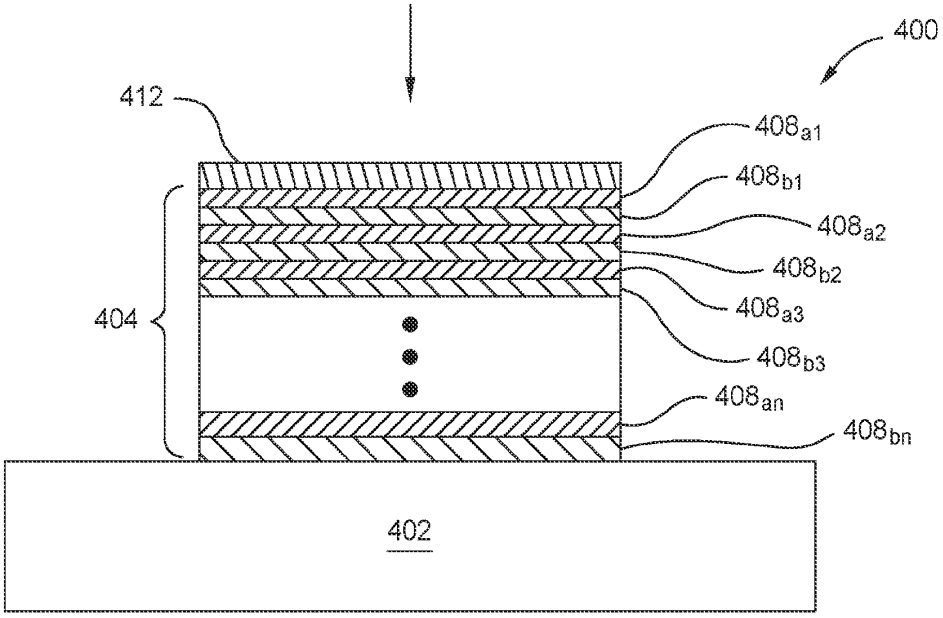
400
412
408_{a1}
408_{b1}
408_{a2}
408_{b2}
408_{a3}
408_{b3}
408_{an}
408_{bn}
404
402

FIG. 4B

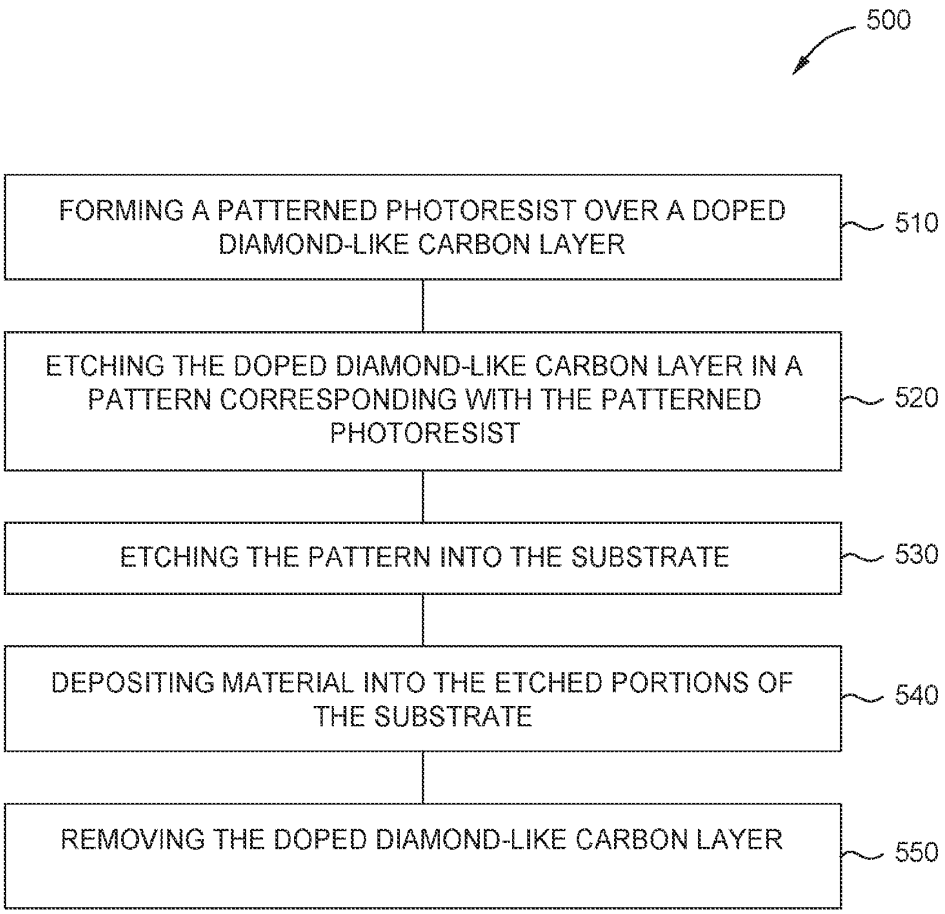
500
FORMING A PATTERNED PHOTORESIST OVER A DOPED DIAMOND-LIKE CARBON LAYER
510
ETCHING THE DOPED DIAMOND-LIKE CARBON LAYER IN A PATTERN CORRESPONDING WITH THE PATTERNED PHOTORESIST
520
ETCHING THE PATTERN INTO THE SUBSTRATE
530
DEPOSITING MATERIAL INTO THE ETCHED PORTIONS OF THE SUBSTRATE
540
REMOVING THE DOPED DIAMOND-LIKE CARBON LAYER
550

FIG. 5