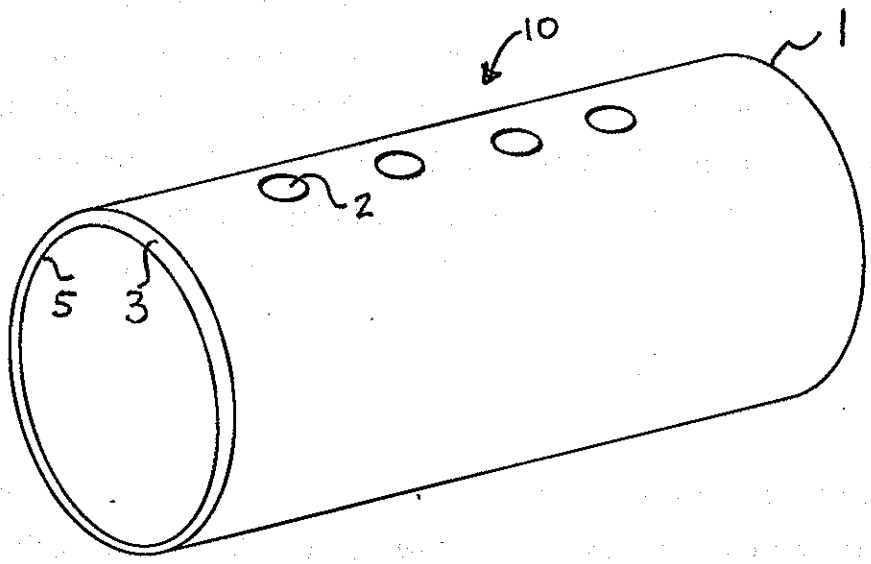

Figure 1

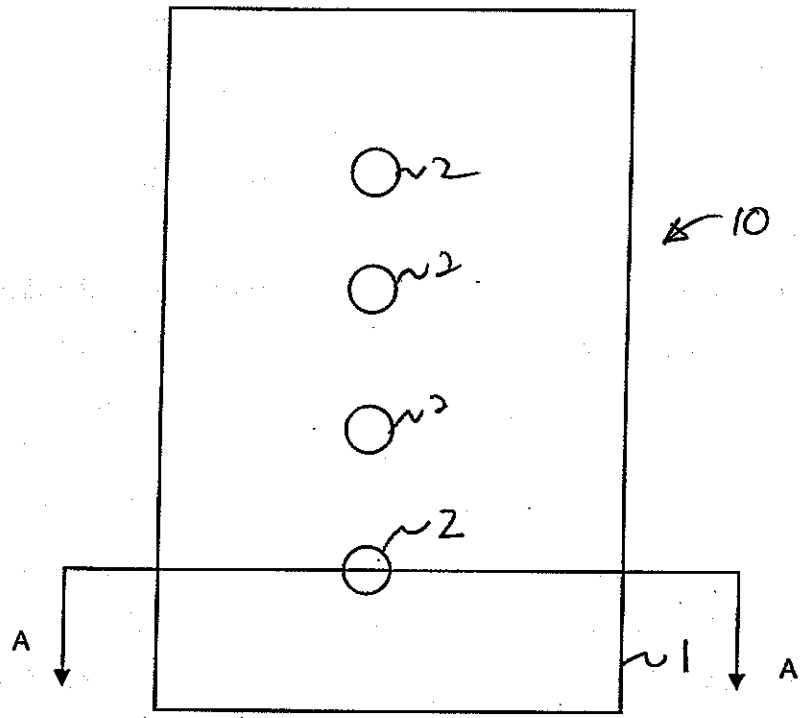

Figure 2

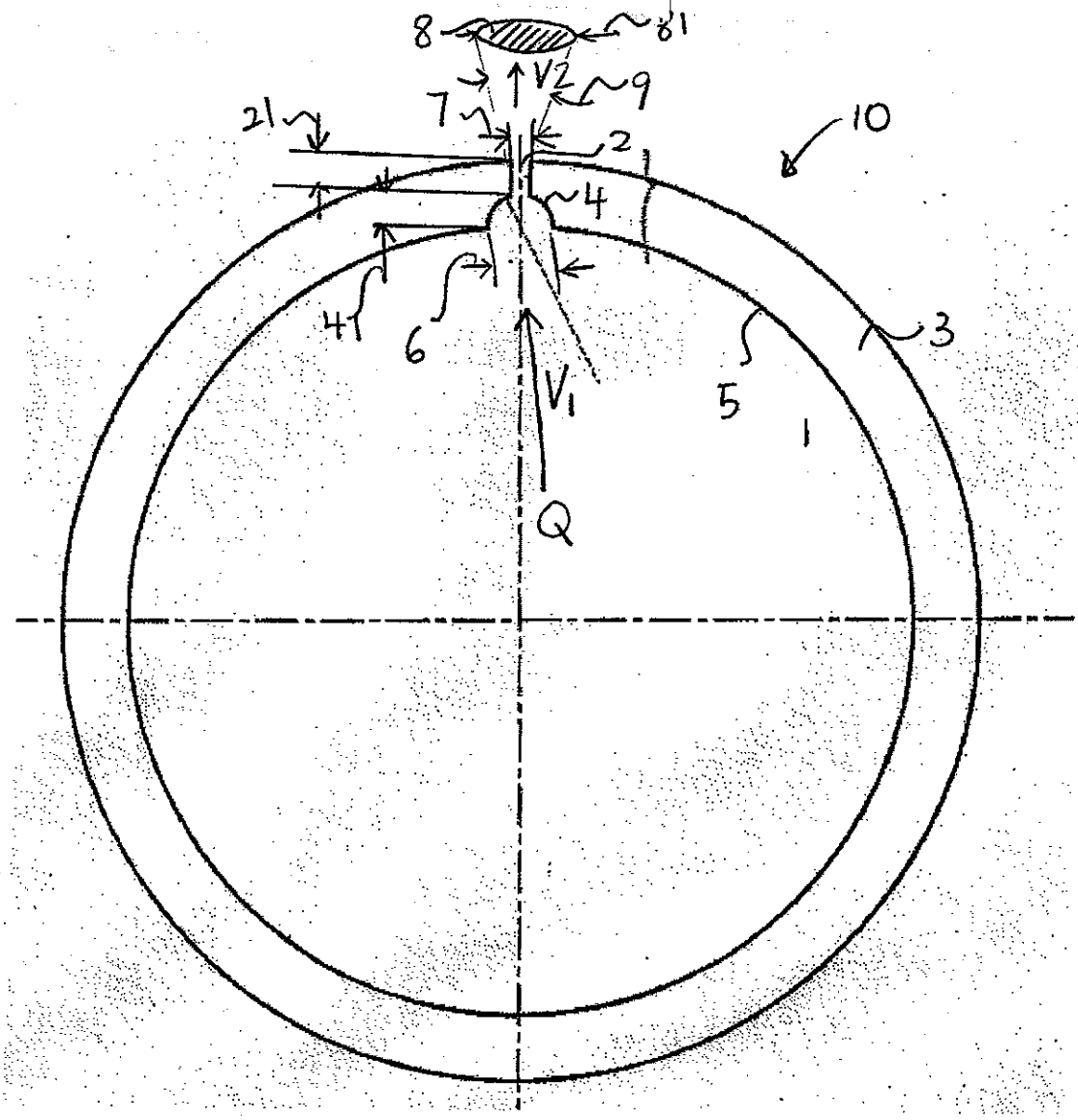

Section A - A

Figure 3

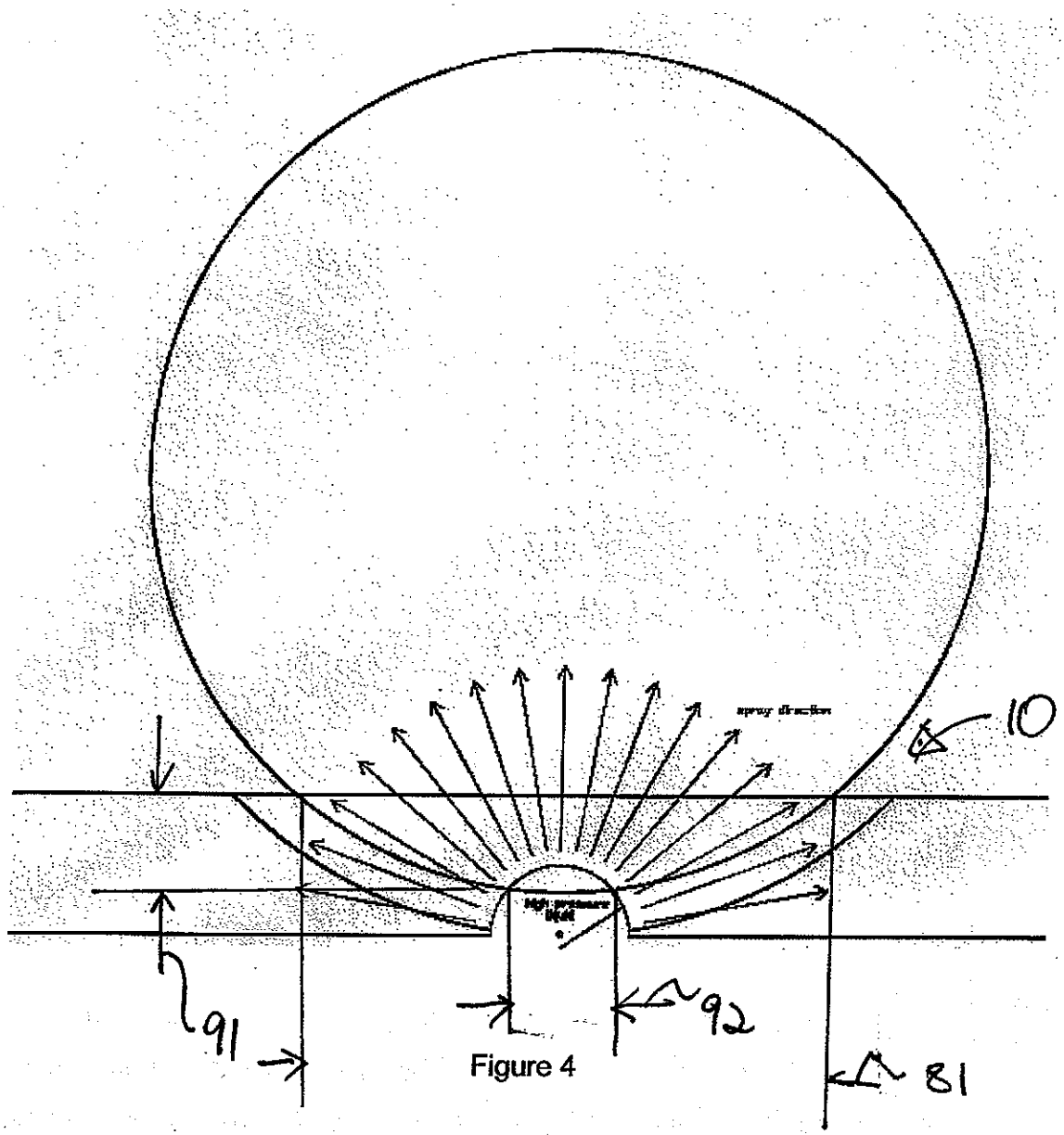

Figure 4

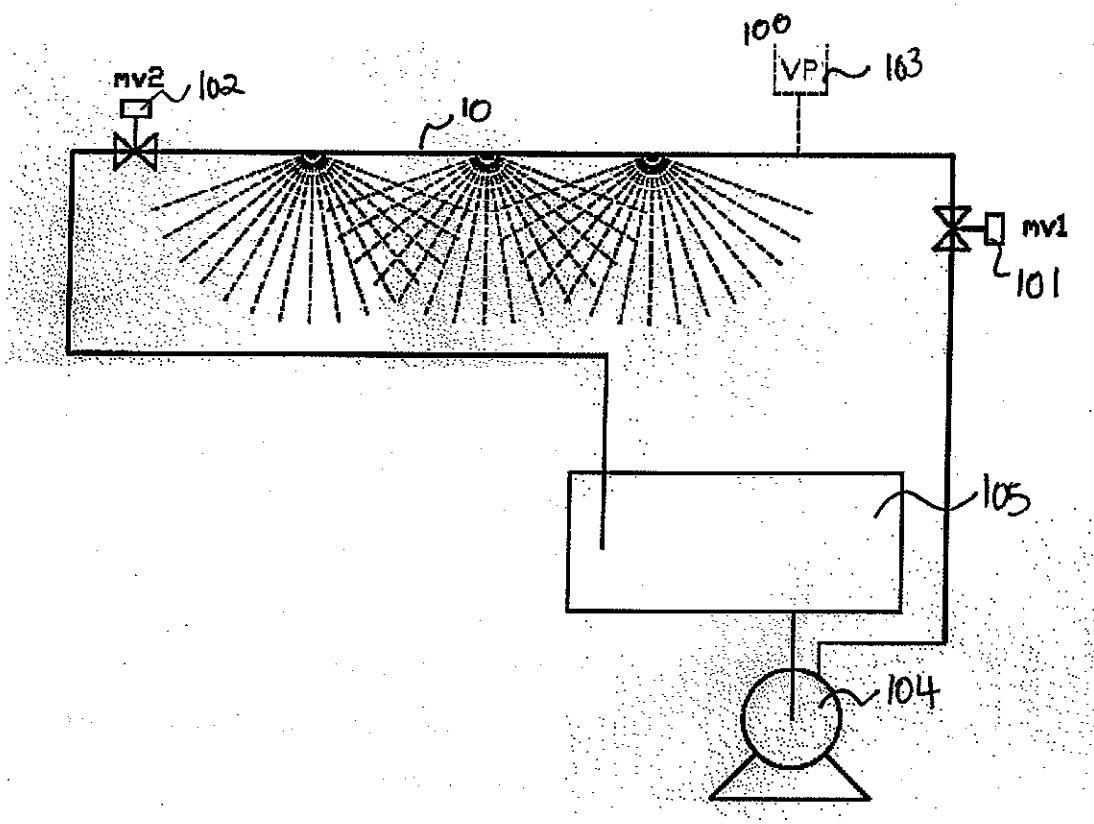

Figure 5

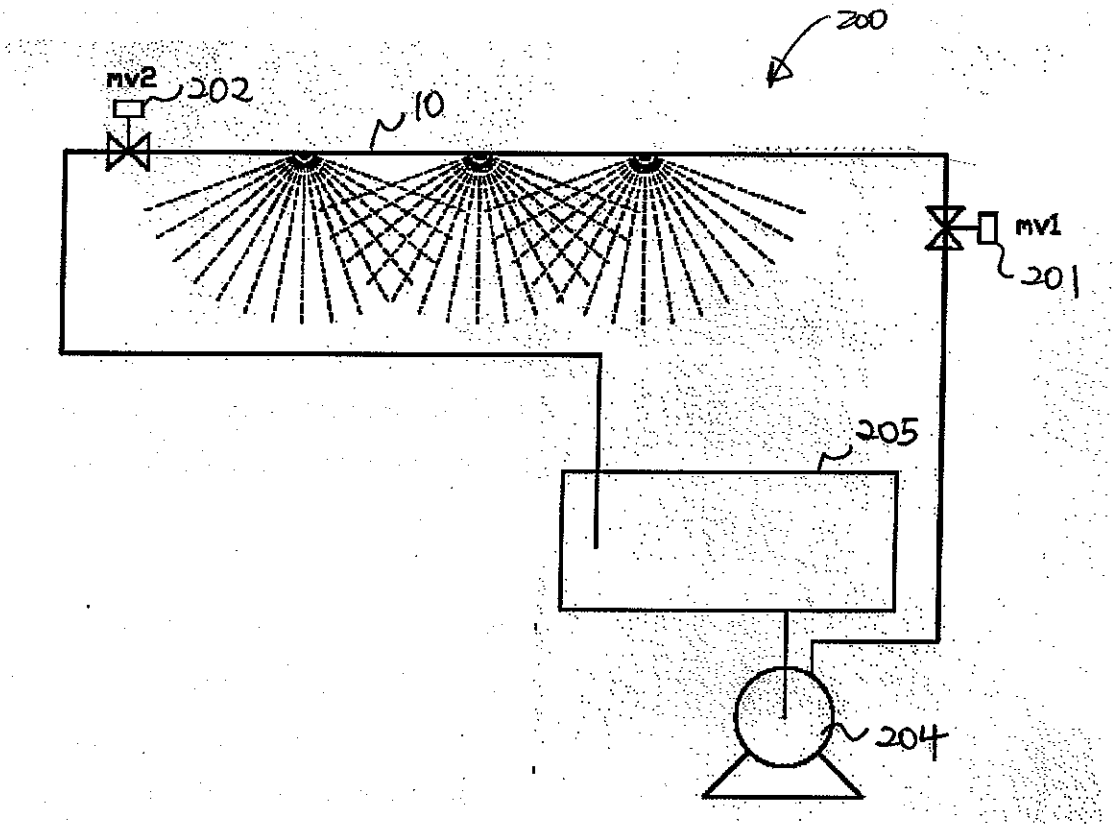

Figure 6

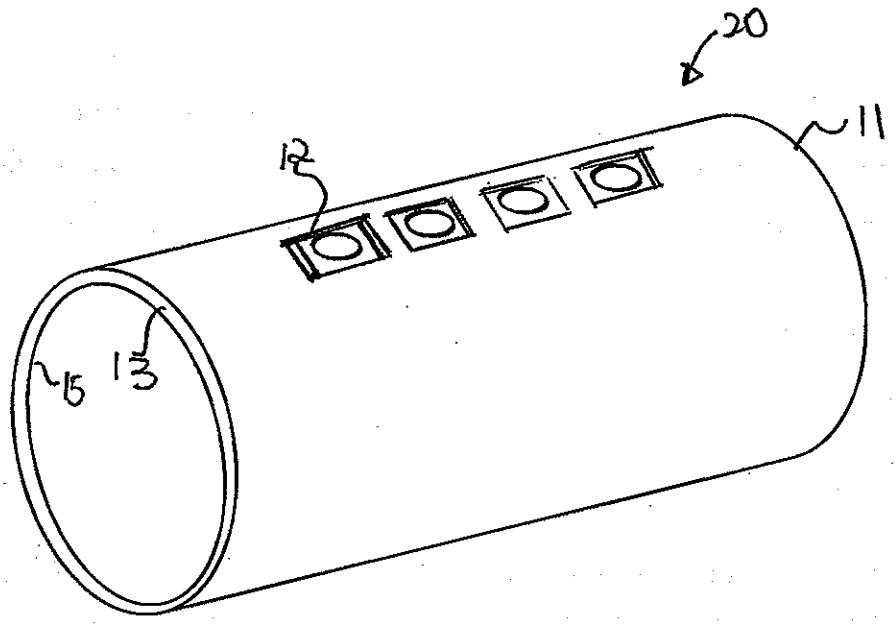

Figure 7

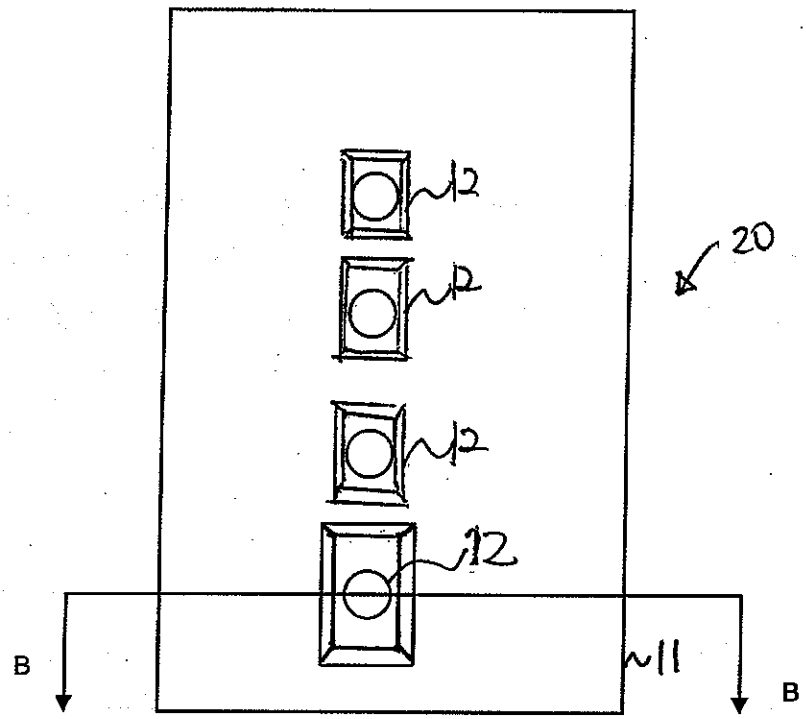

Figure 8

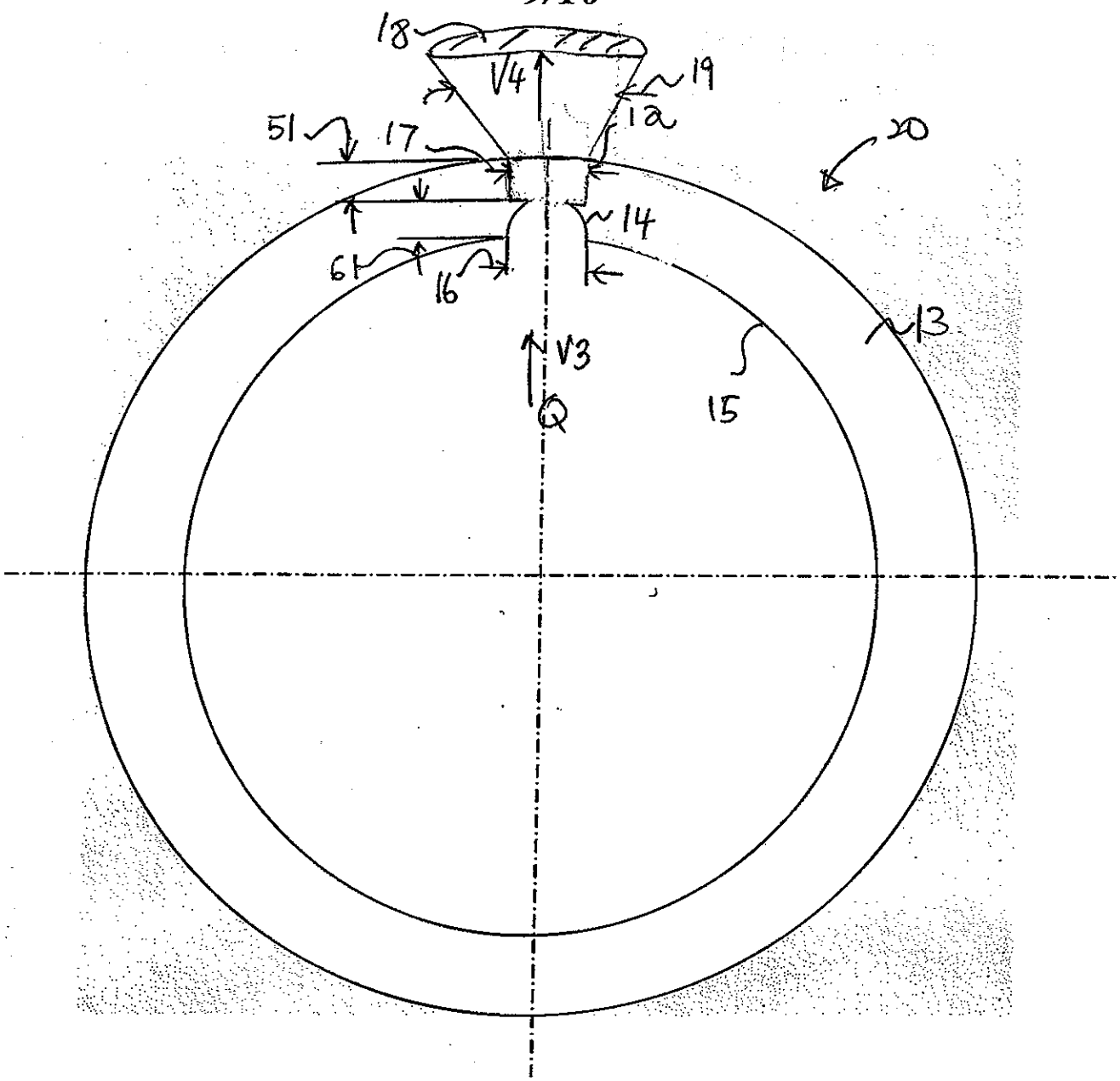

Section B-B

Figure 9

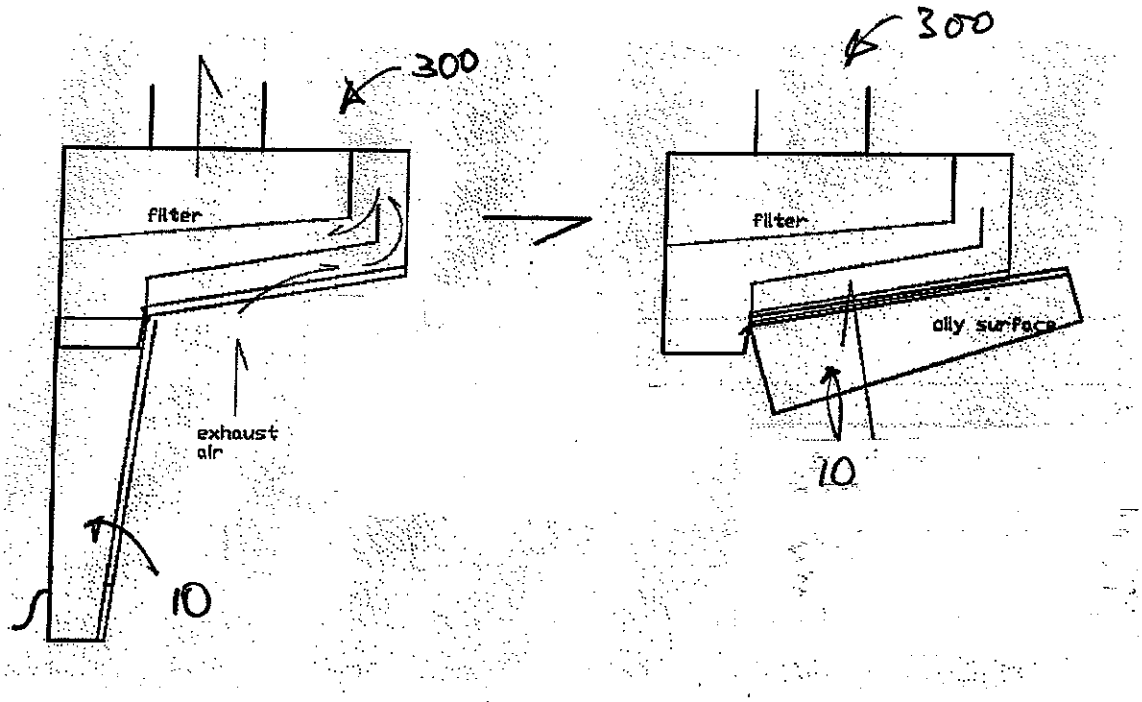

Figure 10