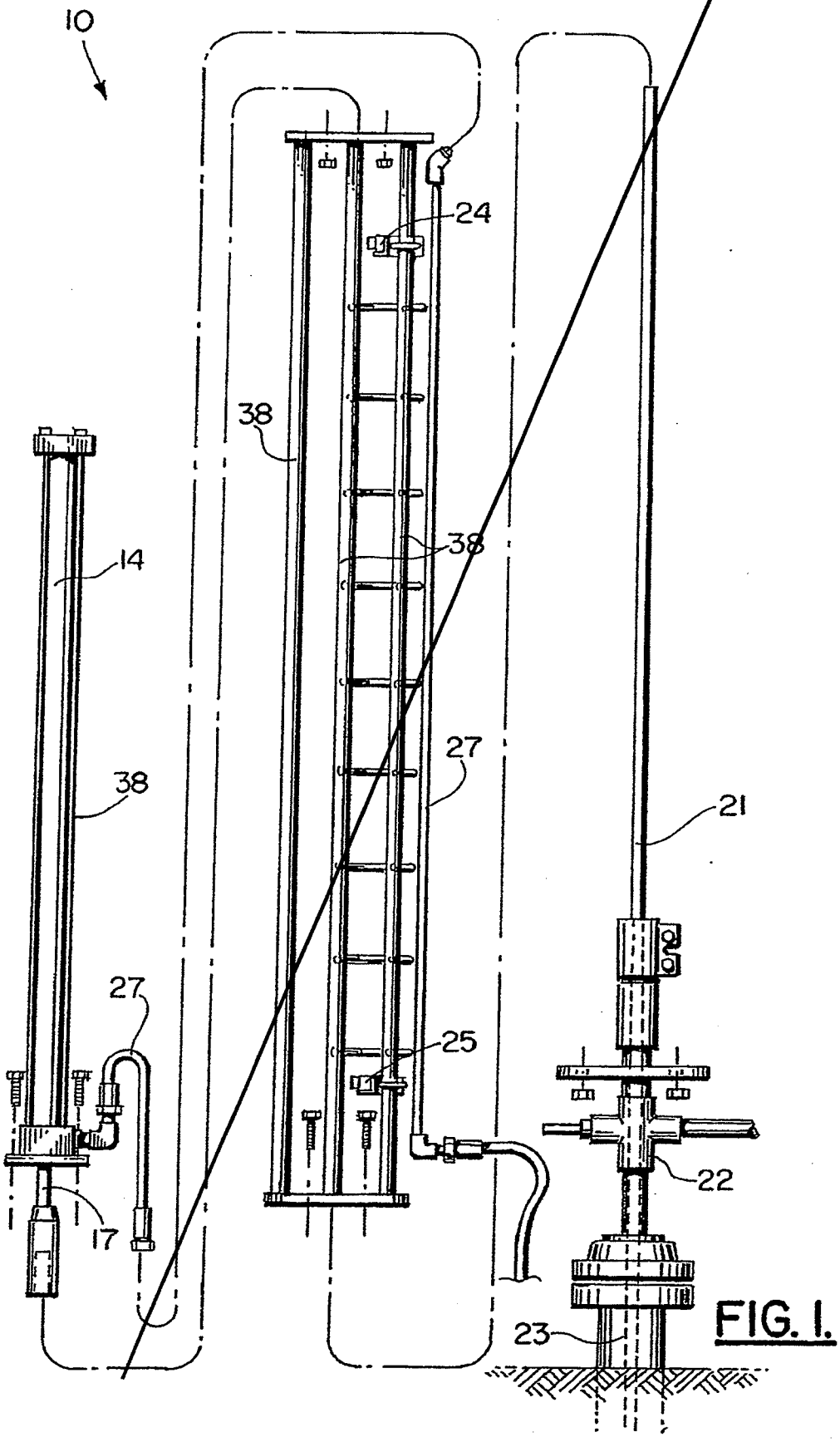

FIG. 1.

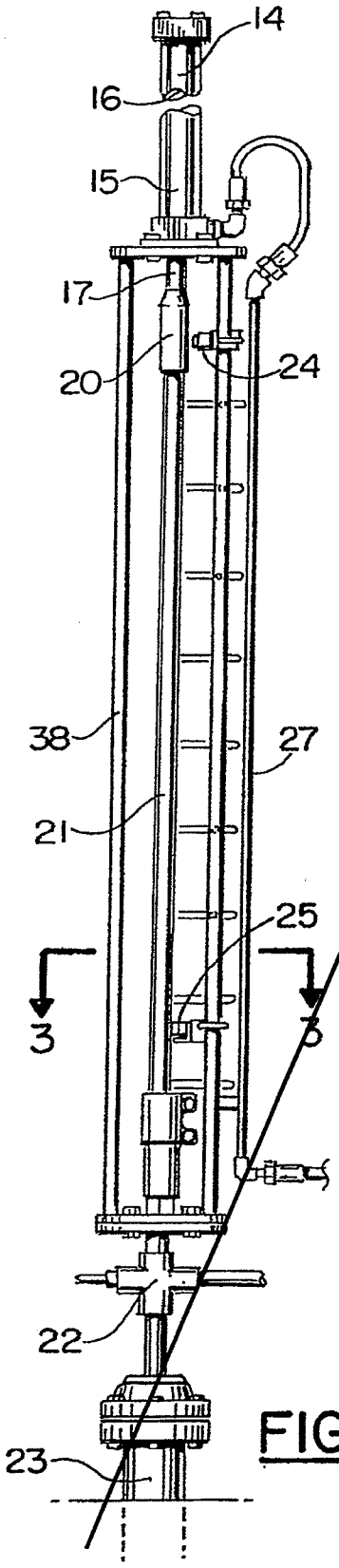

FIG. 2.

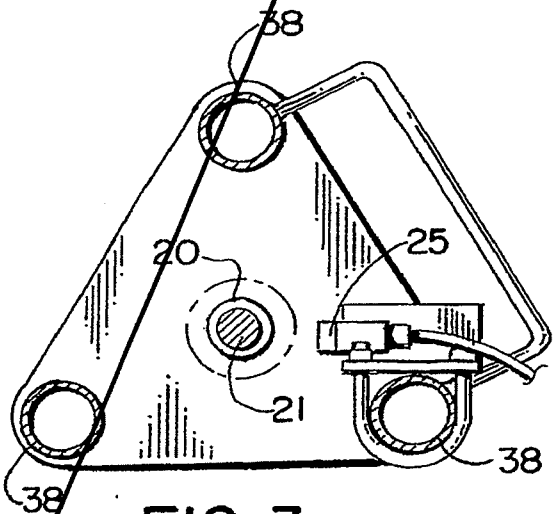

FIG. 3.

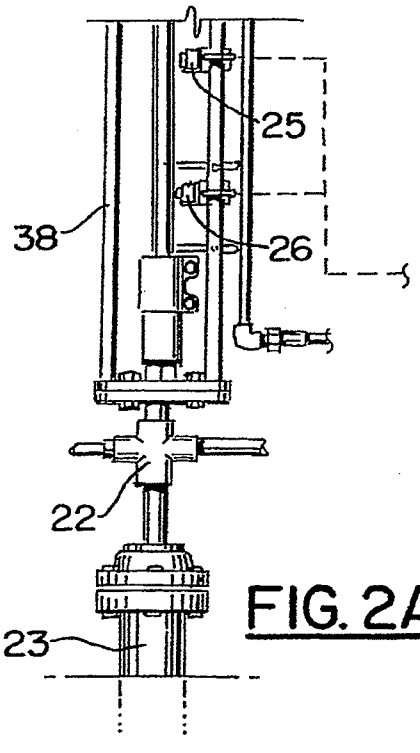

FIG. 2A.

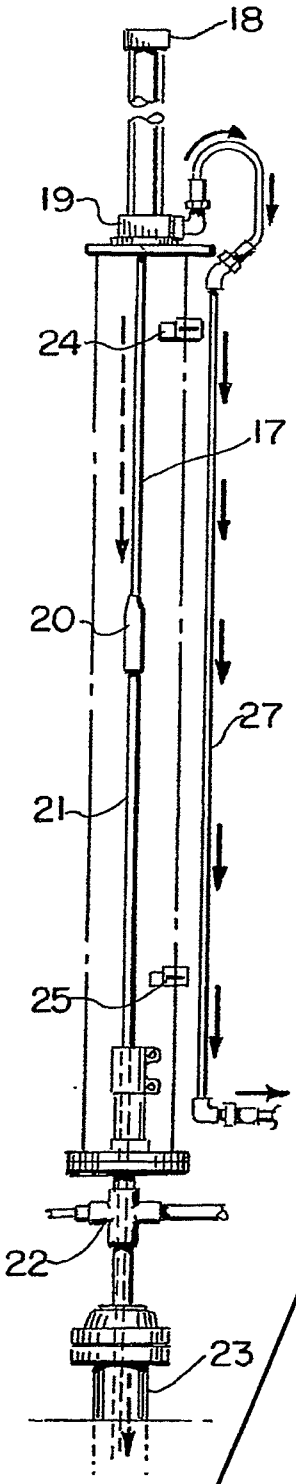

FIG. 4A.

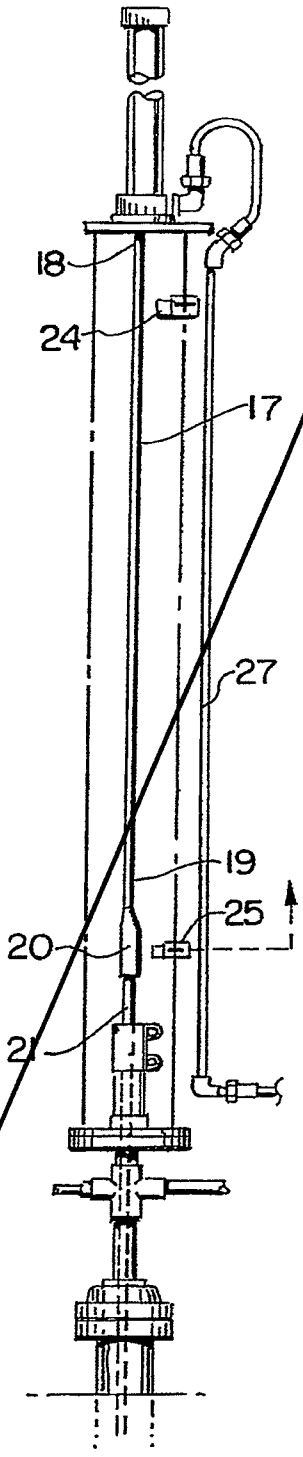

FIG. 4B.

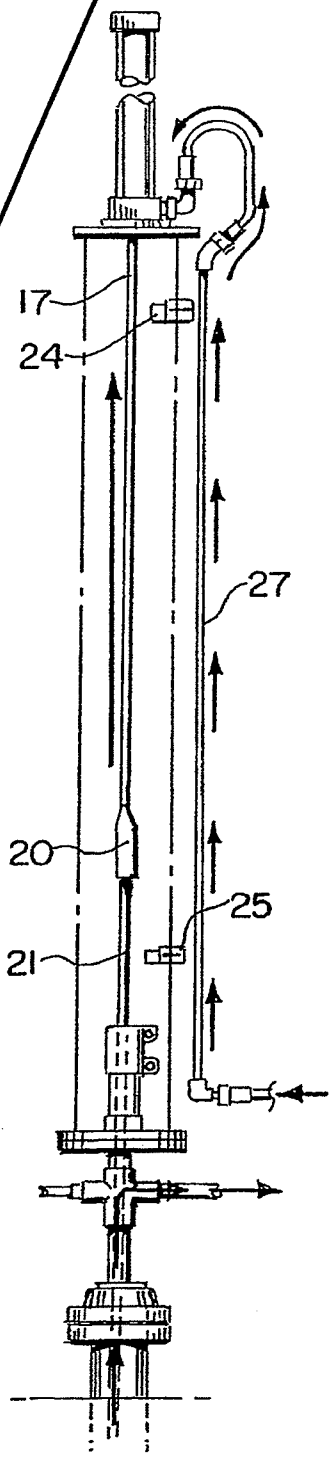

FIG. 4C.

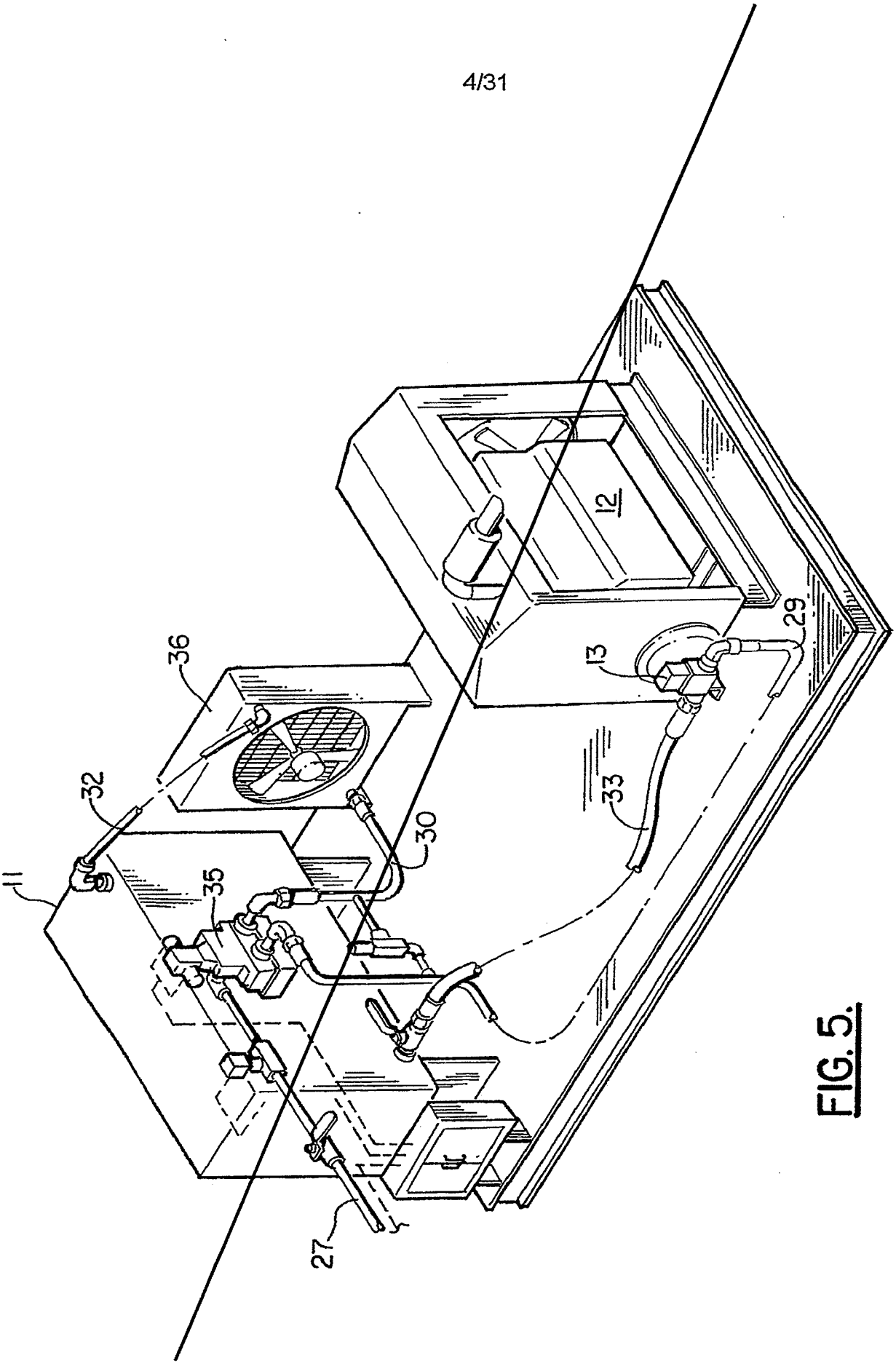

FIG. 5.

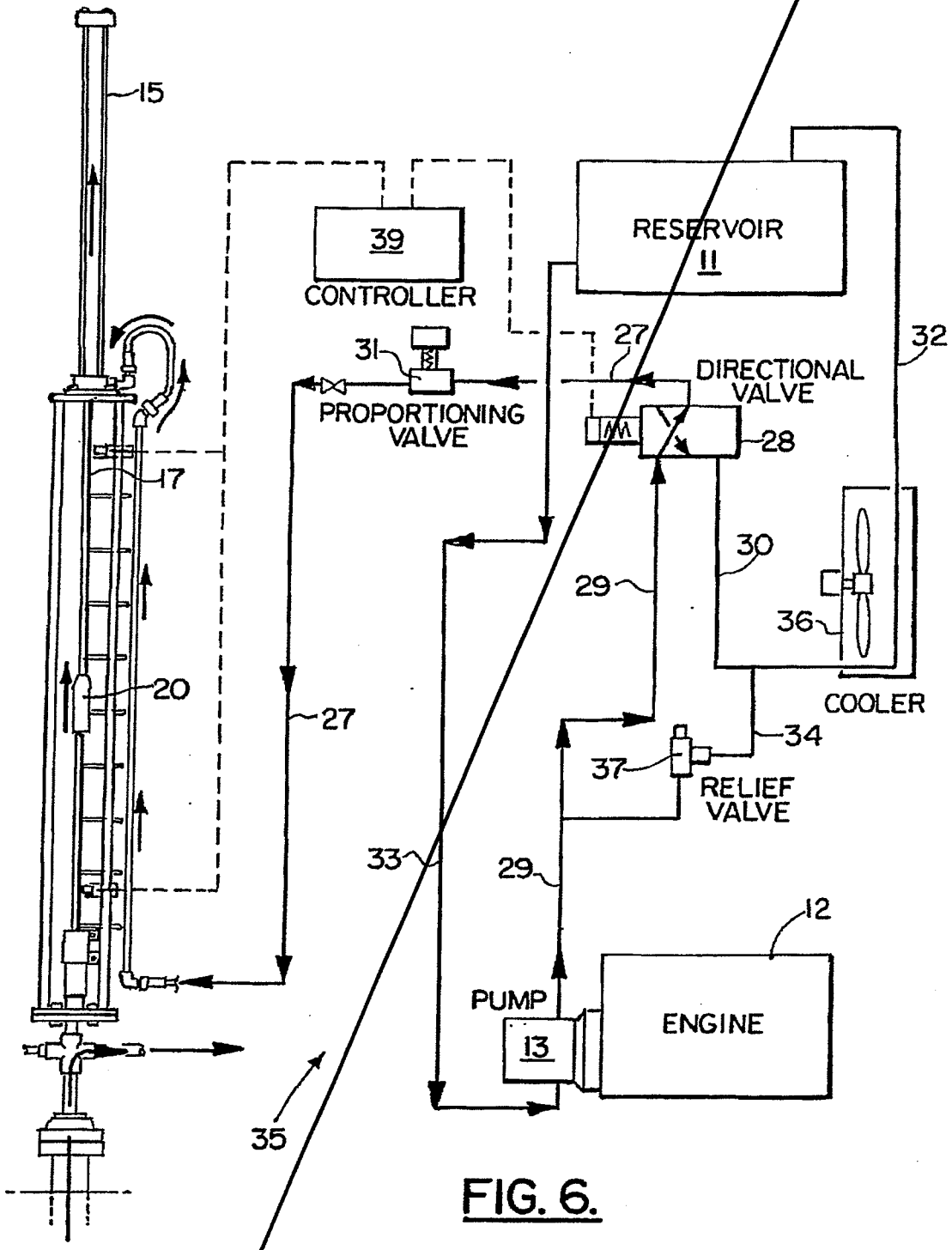
15
39
CONTROLLER
RESERVOIR
11
31
27
32
DIRECTIONAL
VALVE
PROPORTIONING
VALVE
28
17
30
29
36
20
COOLER
27
34
37
RELIEF
VALVE
33
29
12
PUMP
13
ENGINE
35

FIG. 6.

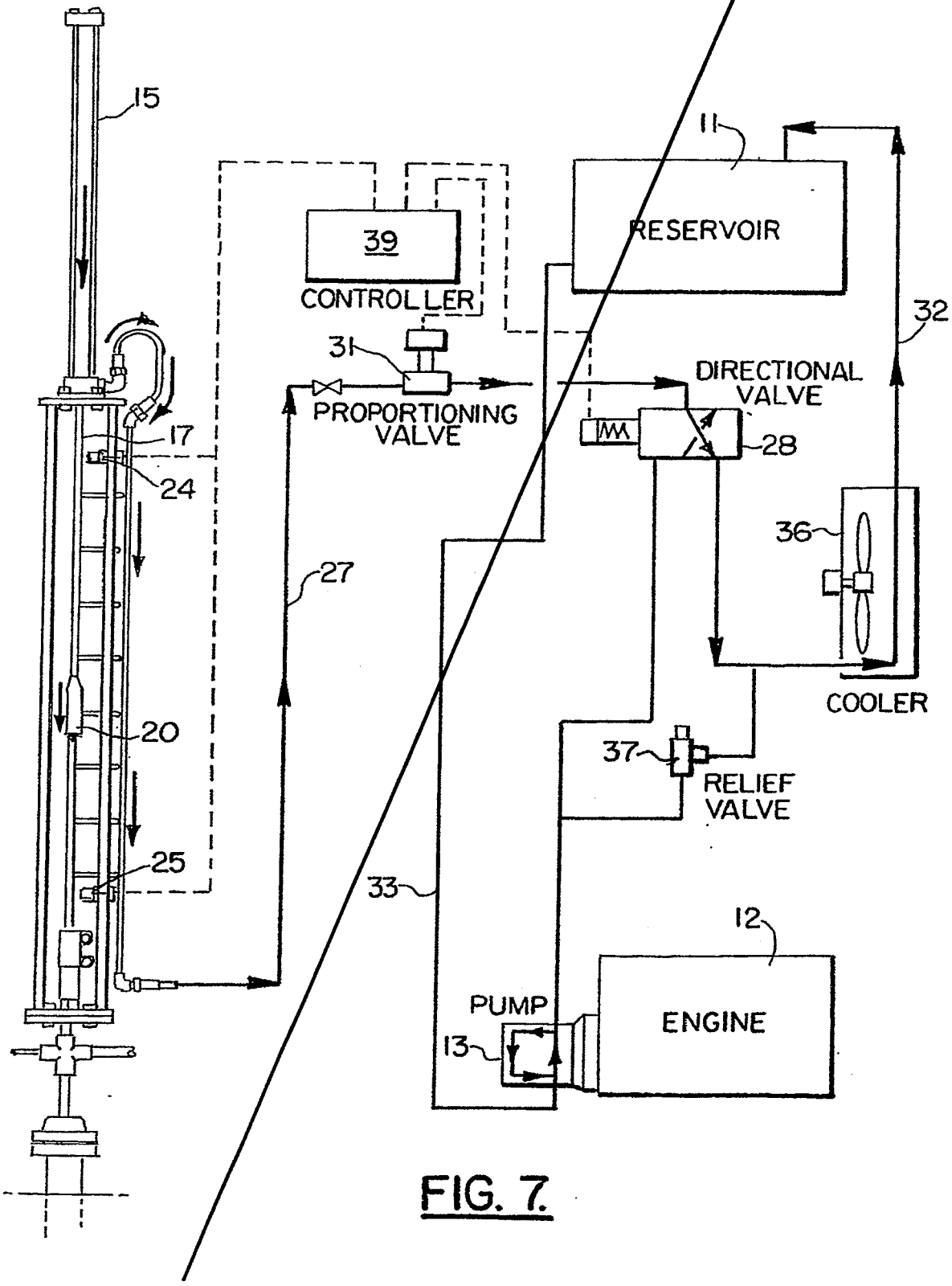
15
11
RESERVOIR
39
CONTROLLER
32
31
PROPORTIONING VALVE
DIRECTIONAL VALVE
28
17
24
36
27
COOLER
20
37
RELIEF VALVE
25
33
12
PUMP
ENGINE
13

FIG. 7.

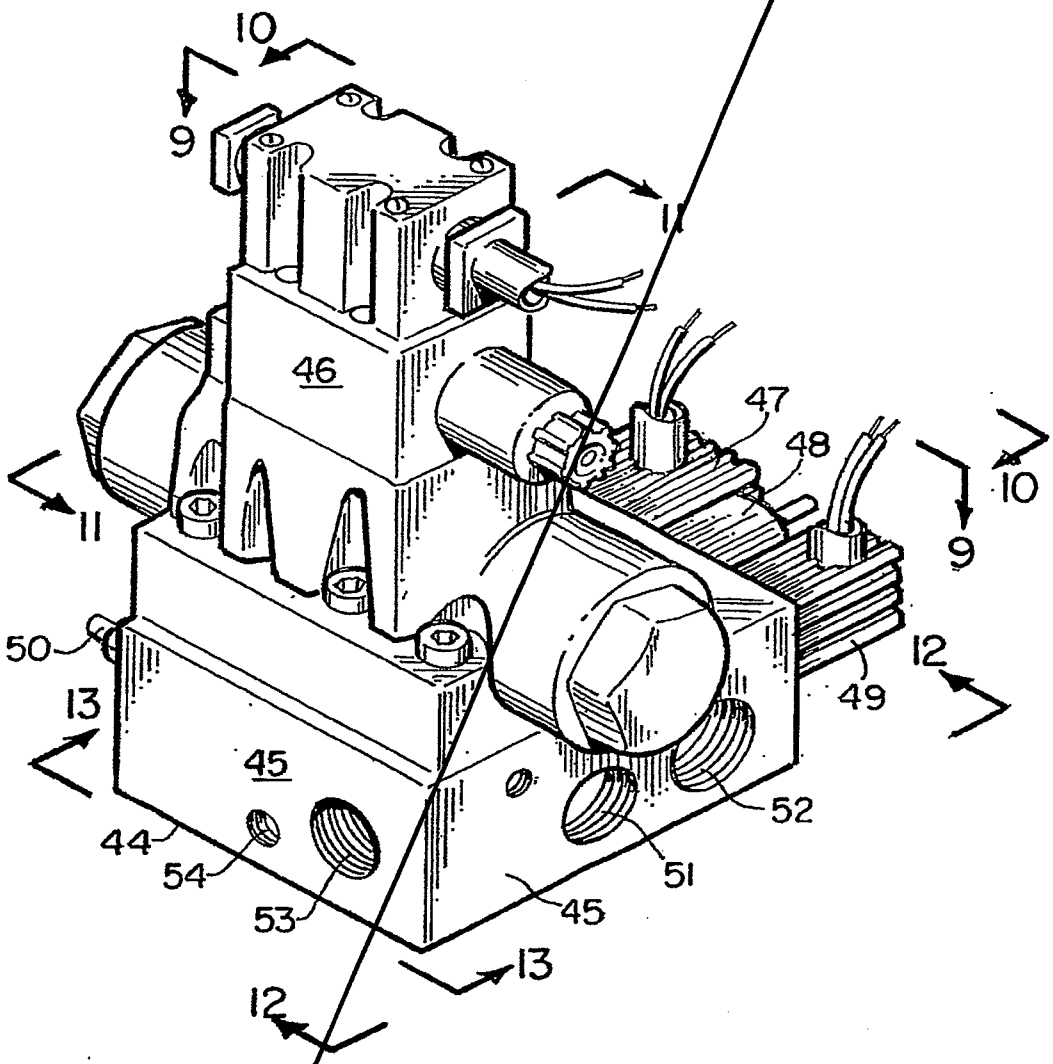

FIG. 8.

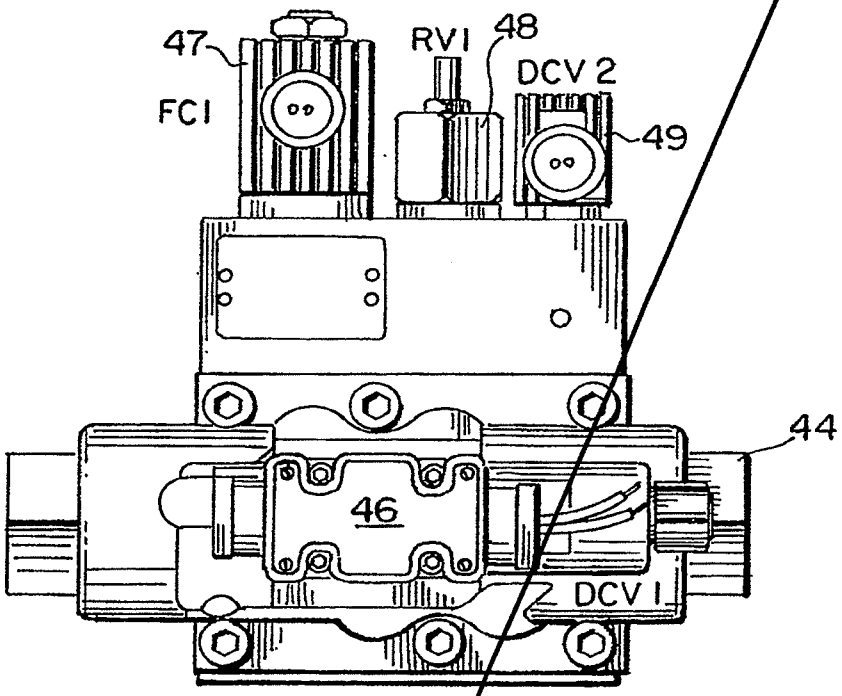
47
FC I
RV I
48
DCV 2
49
44
46
DCV I

FIG. 9.

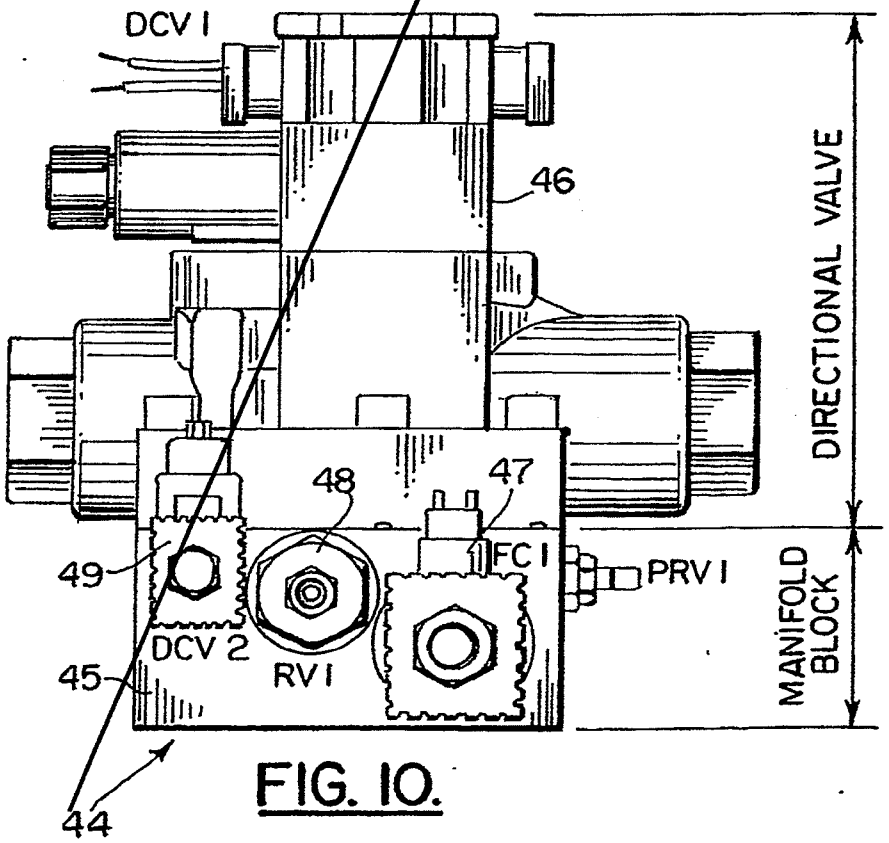
DCV I
46
DIRECTIONAL VALVE
48
47
49
FC I
PRV I
DCV 2
RV I
45
MANIFOLD BLOCK
44

FIG. 10.

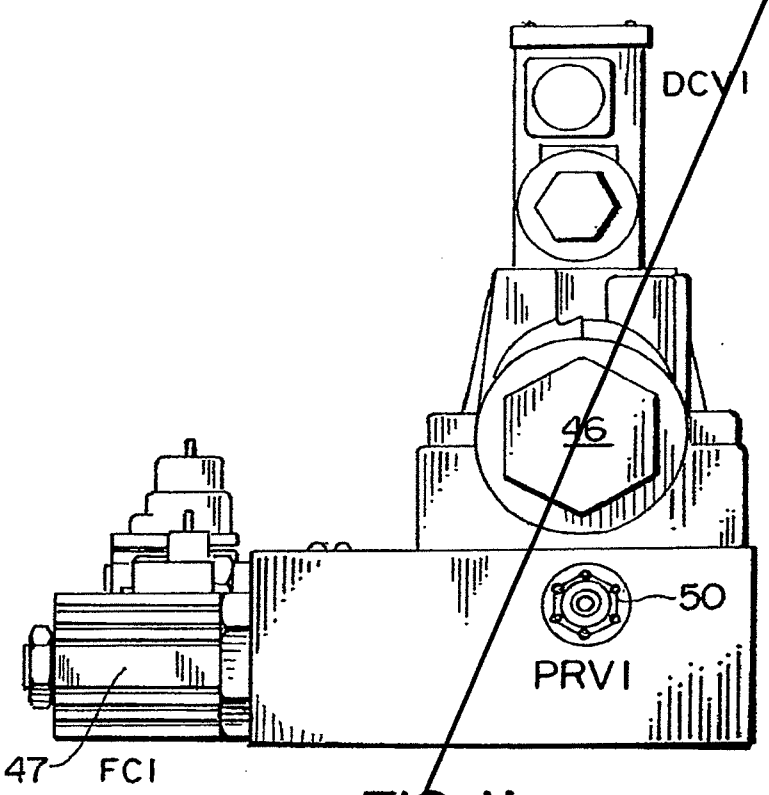

FIG. 11.

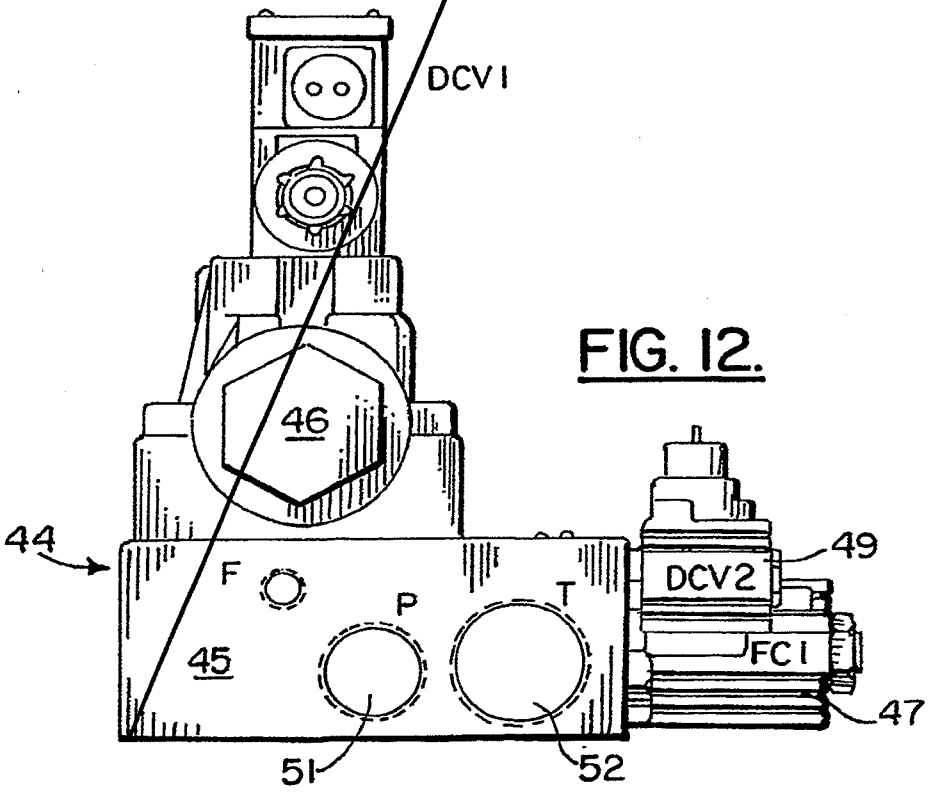

FIG. 12.

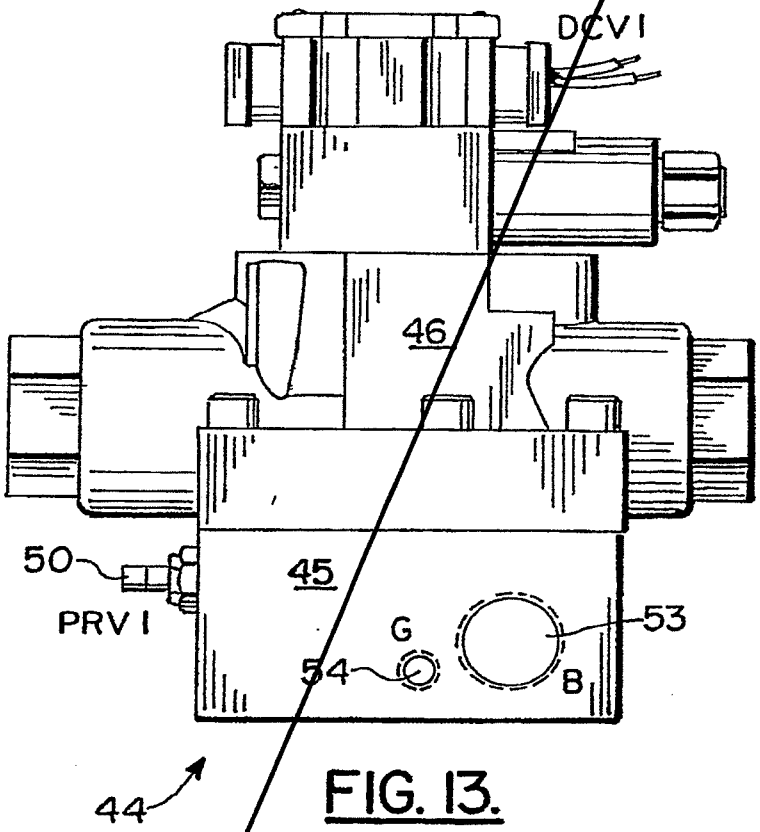

FIG. 13.

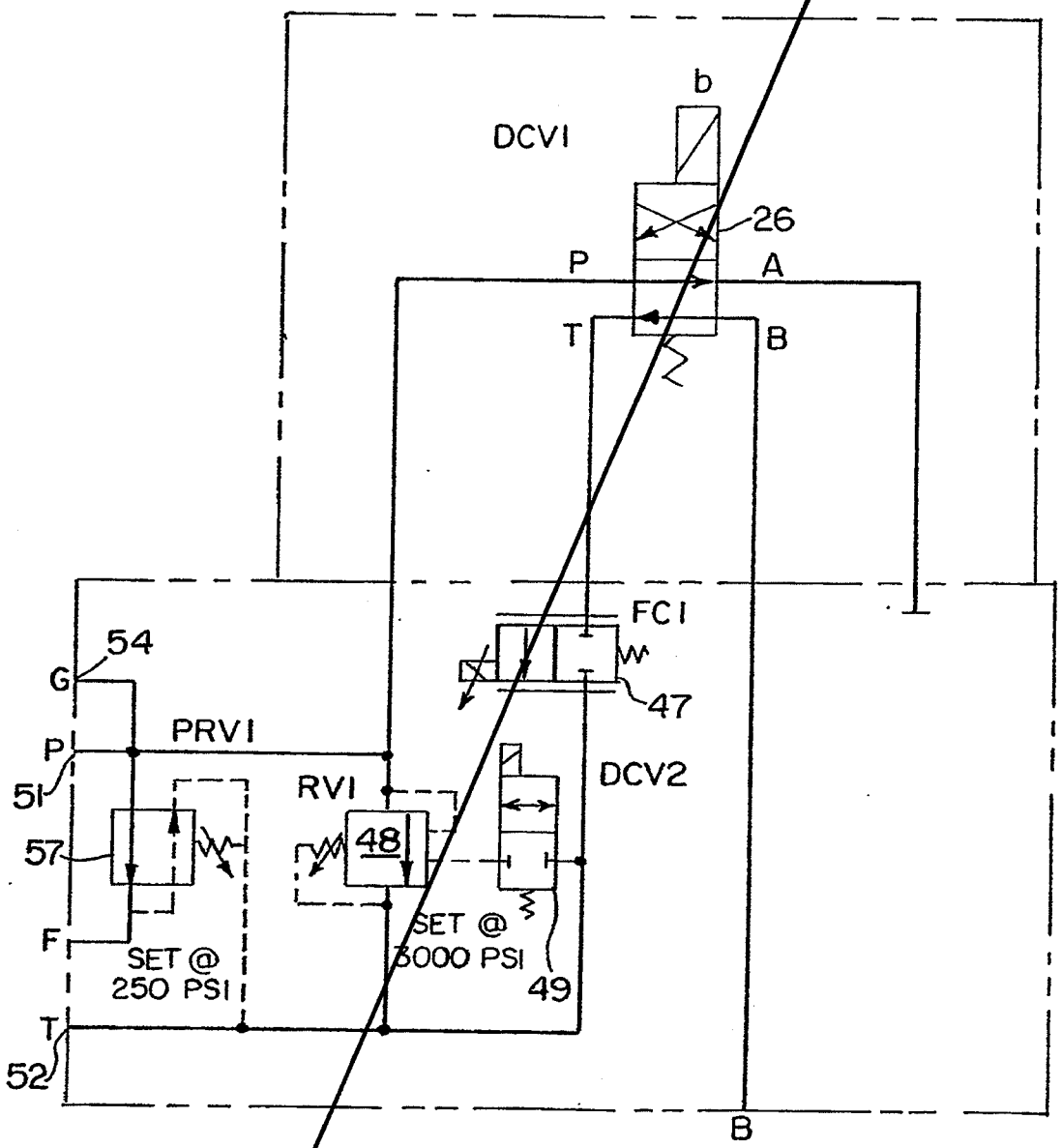
b
DCV1
26
P
A
T
B
FC1
47
54
G
PRV1
P
51
RV1
DCV2
57
48
F
SET @
250 PSI
SET @
3000 PSI
49
T
52
B

FIG. 14.

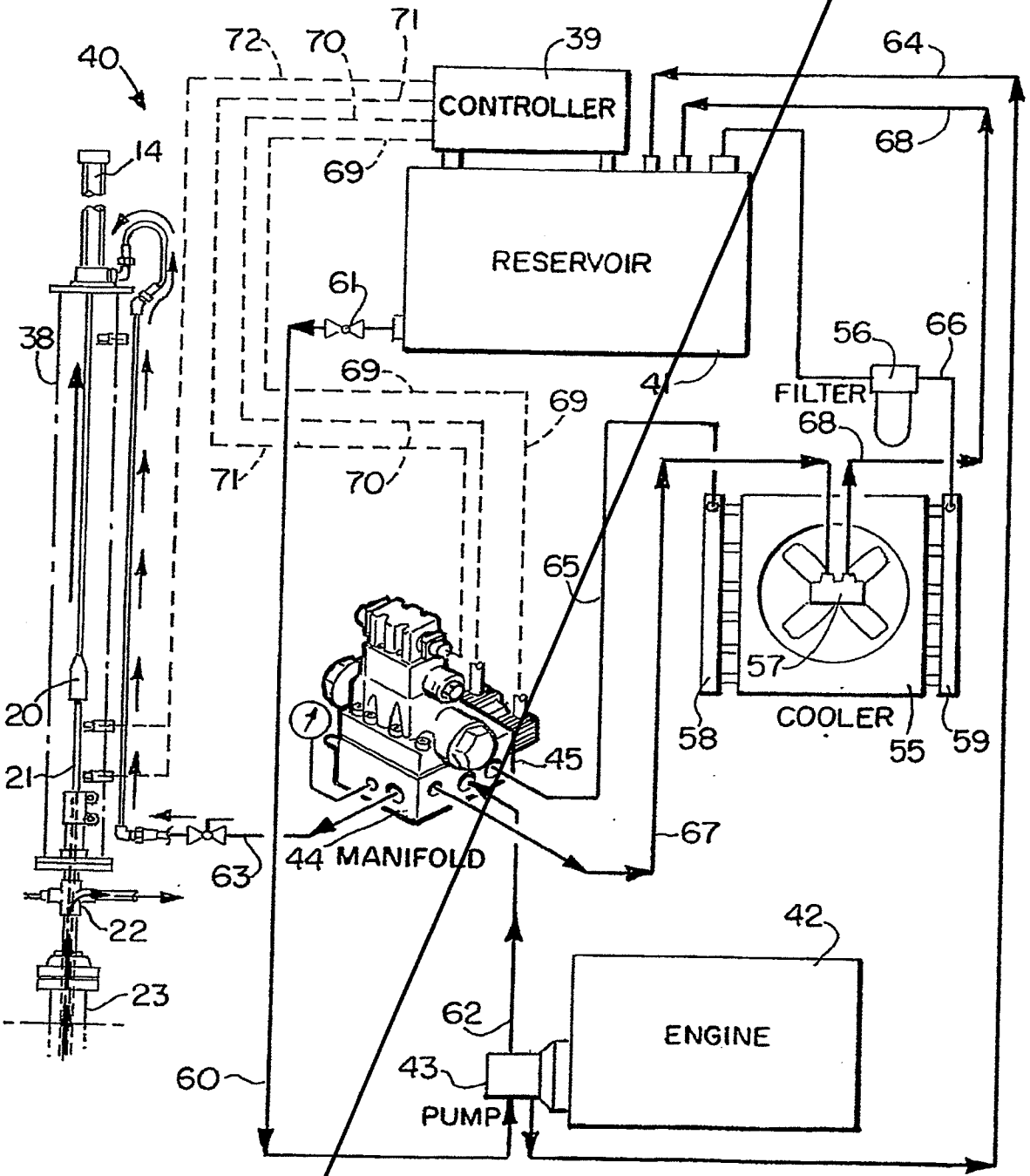
40
72
70
71
39
CONTROLLER
64
68
14
69
RESERVOIR
61
38
56
66
69
41
FILTER
69
68
71
70
65
57
20
58
COOLER
55
59
21
45
67
63
44 MANIFOLD
22
42
23
62
ENGINE
43
60
PUMP

FIG. 15.

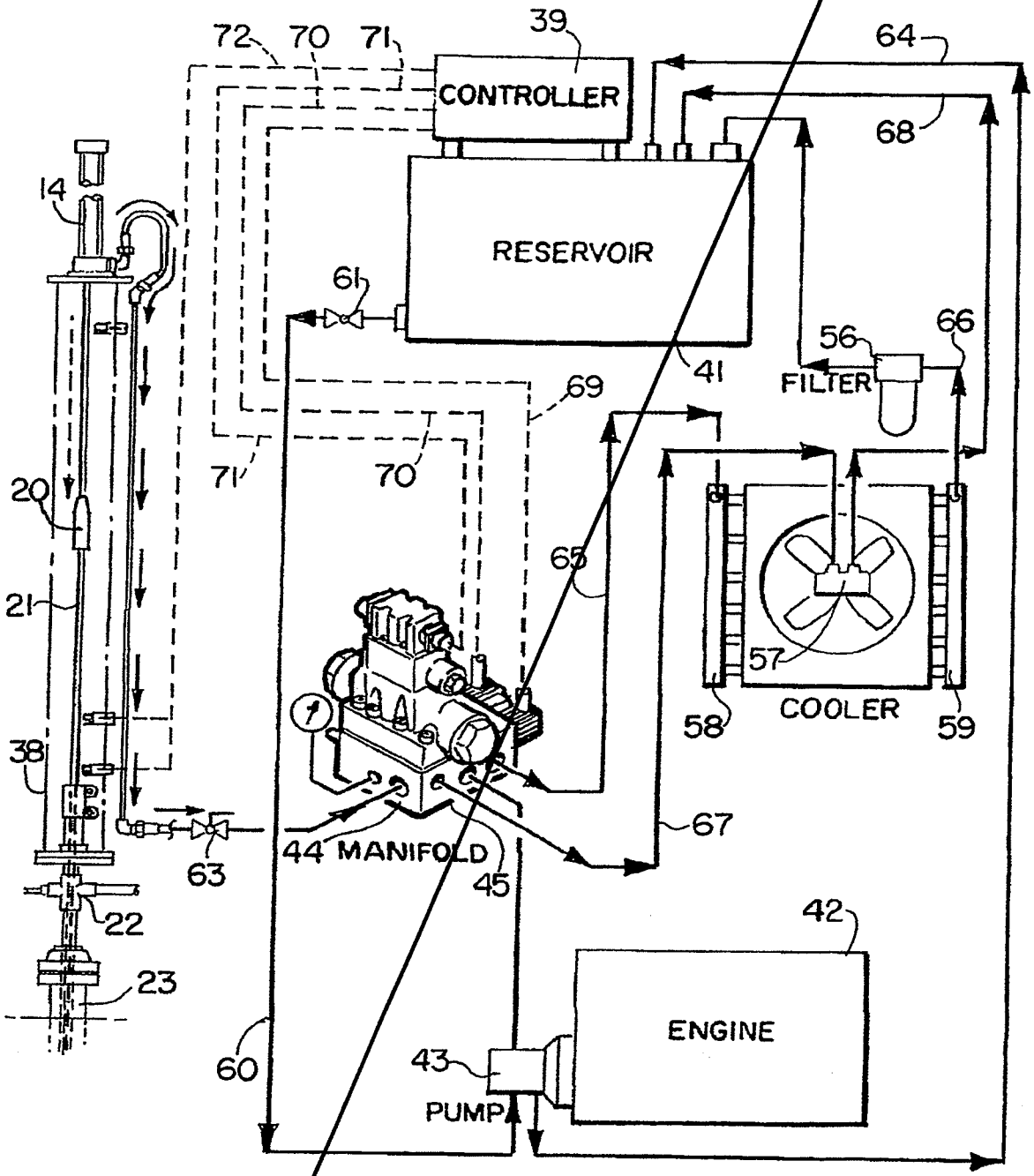
72
70
71
39
CONTROLLER
64
68
14
RESERVOIR
61
56
66
FILTER
41
69
71
70
20
65
21
57
COOLER
58
59
38
44 MANIFOLD
45
67
63
22
42
23
ENGINE
60
43
PUMP

FIG. 16.

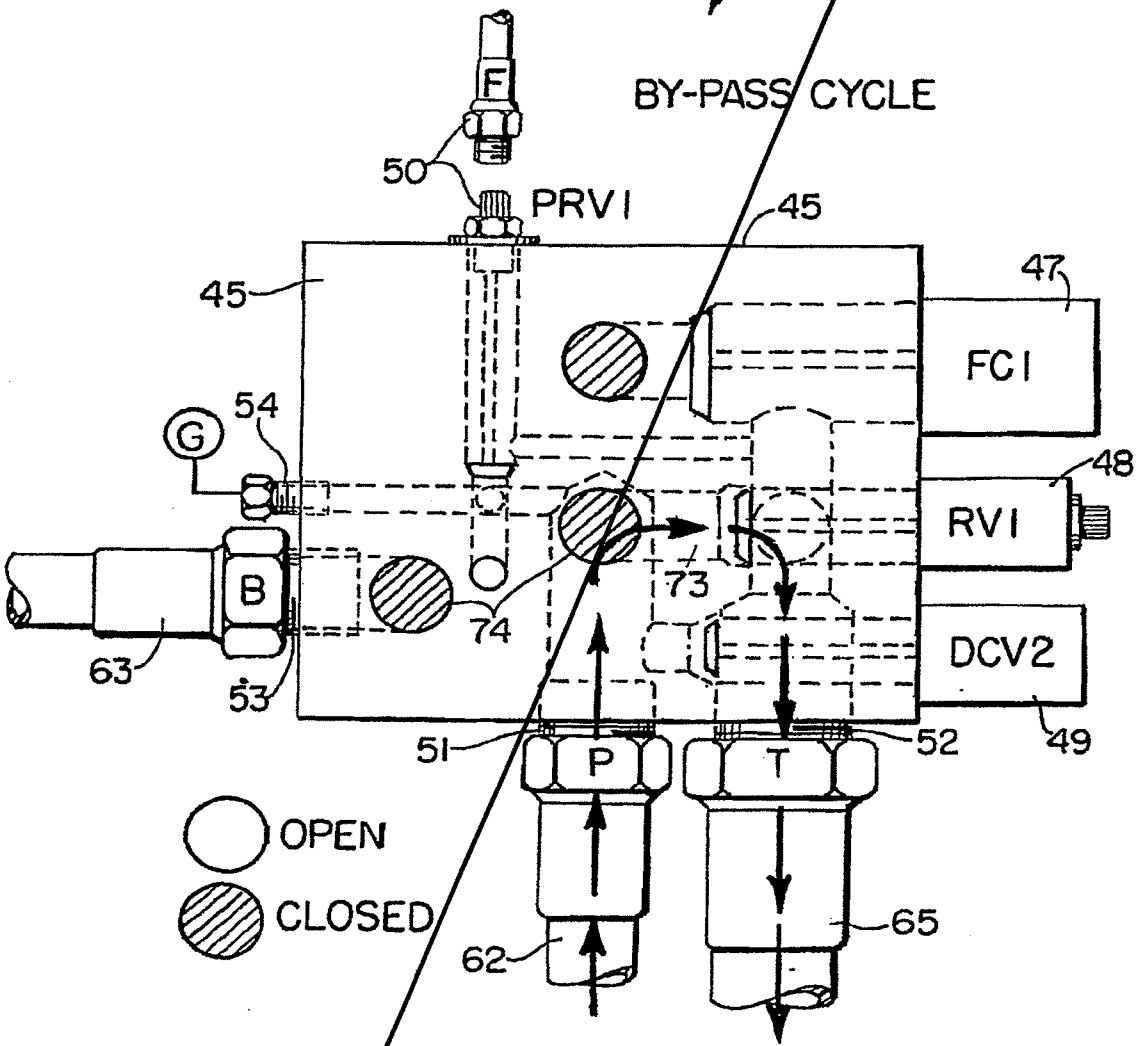
44
BY-PASS CYCLE
F
50
PRV1
45
45
47
FC1
G
54
48
RV1
B
73
74
DCV2
63
53
51
52
49
P
T
OPEN
CLOSED
62
65

FIG. 17.

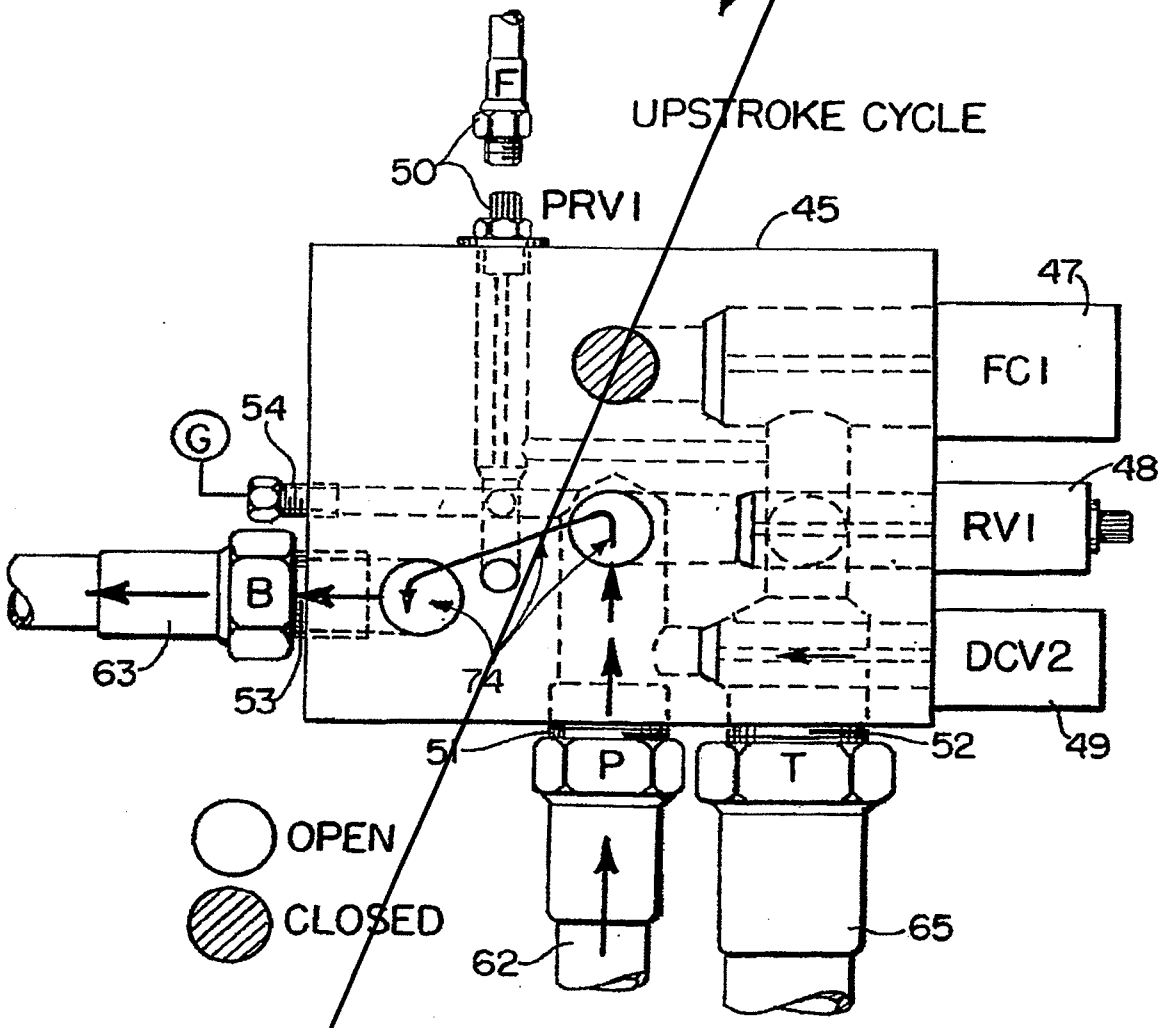
44
UPSTROKE CYCLE
F
50
PRV1
45
47
FC1
48
RV1
DCV2
49
G
54
B
63
53
74
51
52
P
T
OPEN
CLOSED
62
65

FIG. 18.

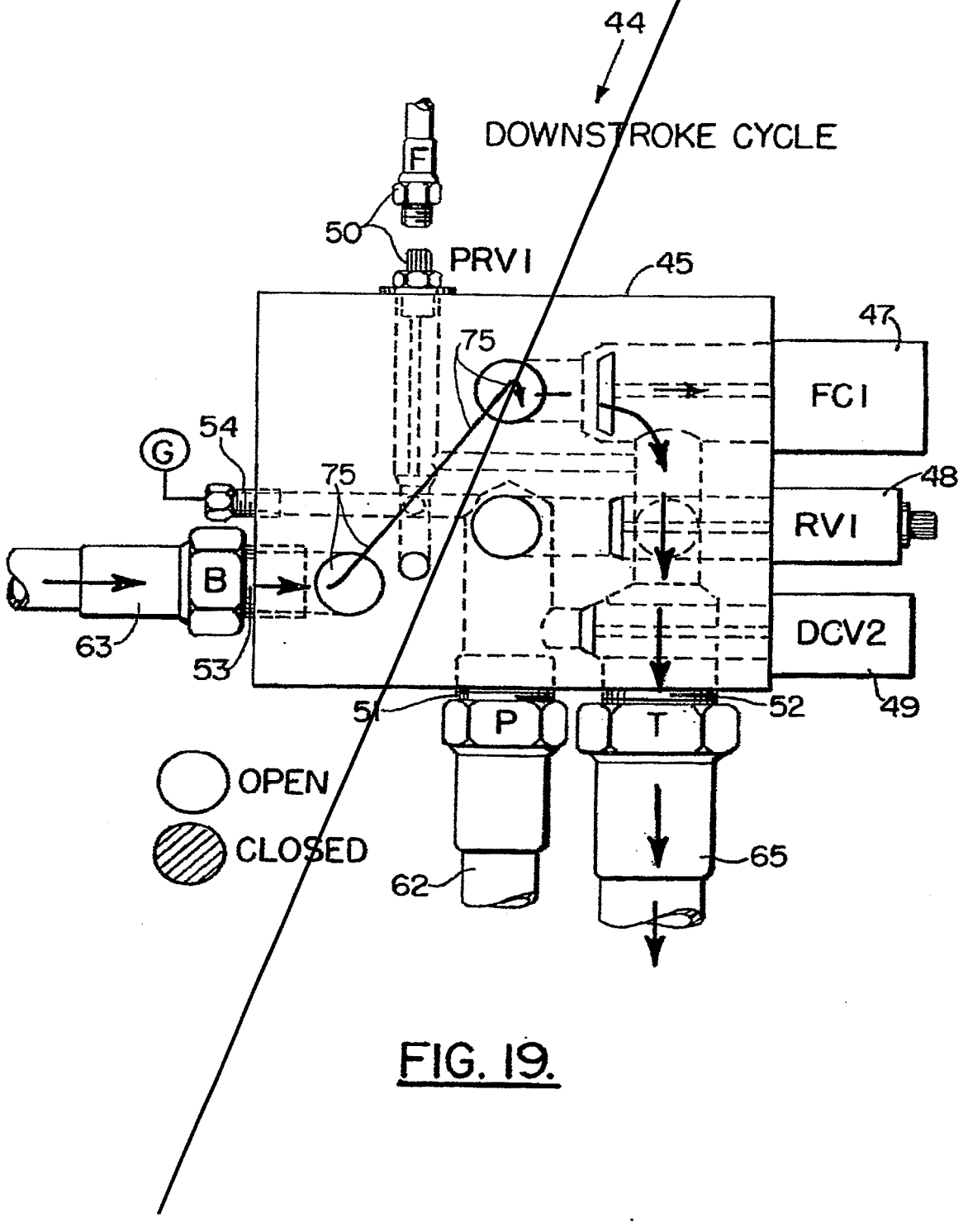
44
DOWNSTROKE CYCLE
F
50
PRV1
45
47
75
FC1
54
G
75
48
RV1
B
DCV2
63
53
51
P
T
52
49
OPEN
CLOSED
62
65

FIG. 19.

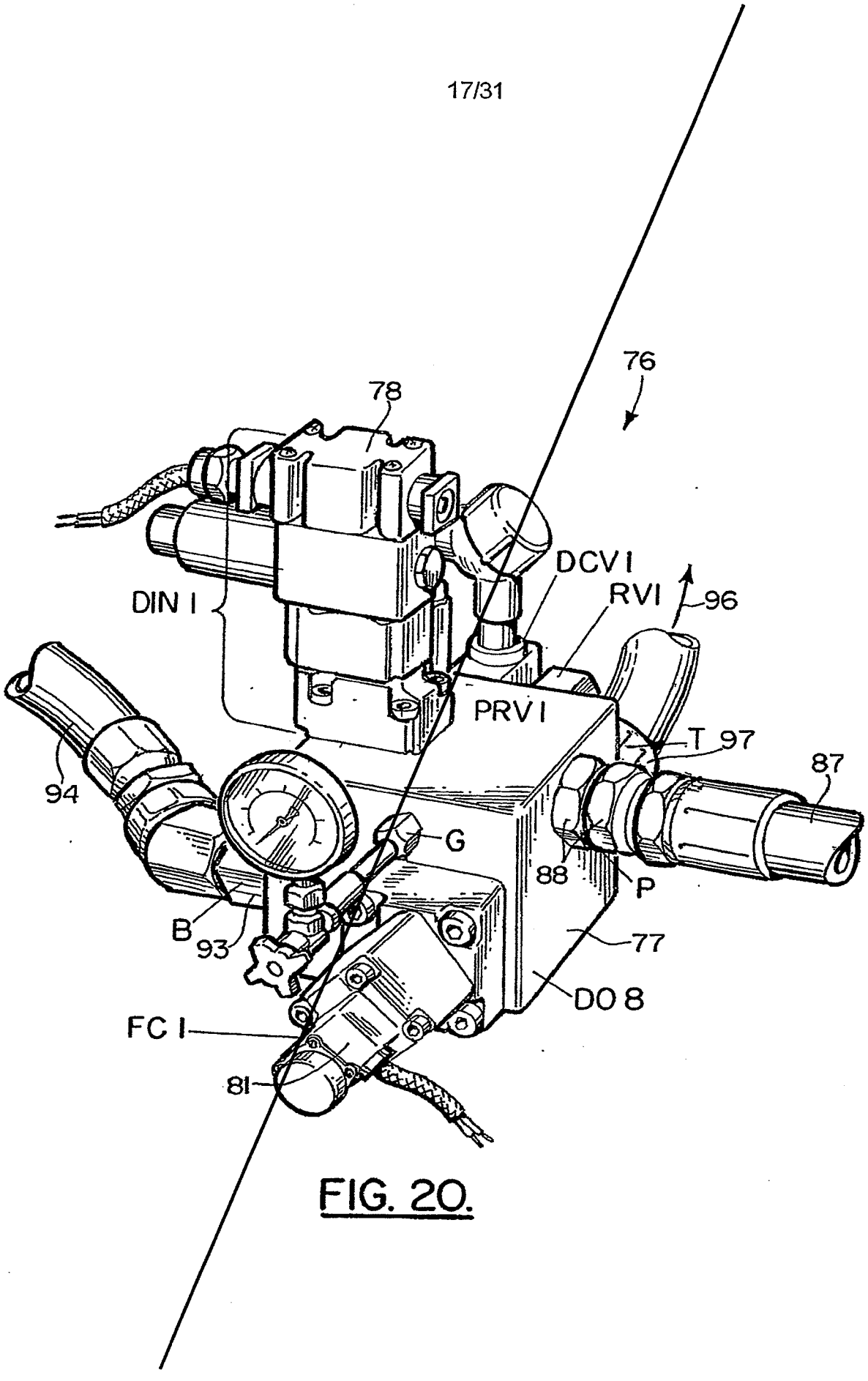

FIG. 20.

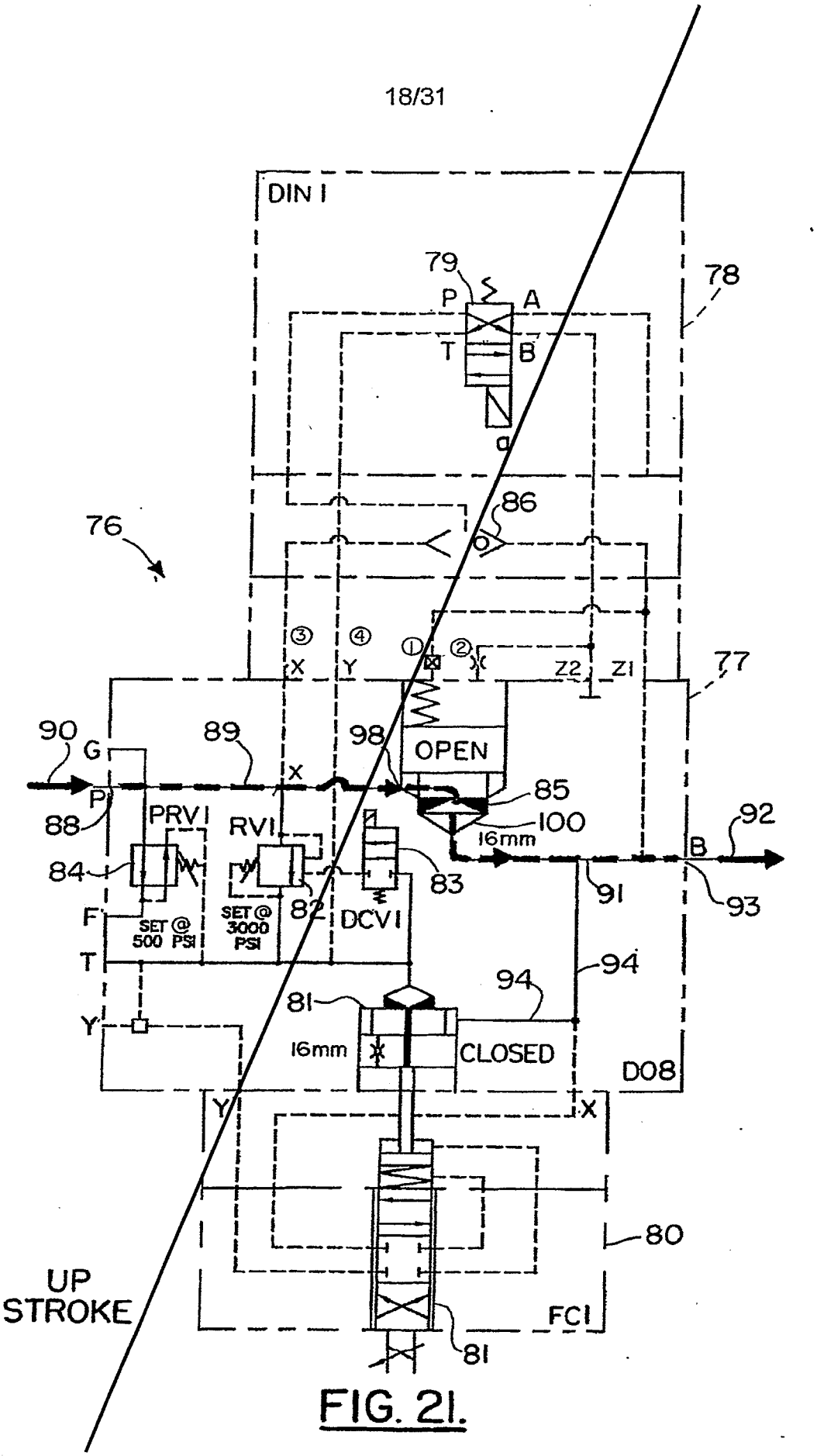
DIN I
79
P
A
T
B
a
78
86
76
③
④
①
②
X
Y
Z2
Z1
77
90
G
89
98
OPEN
X
85
P
88
PRV1
RV1
100
16mm
92
B
84
83
91
93
F
SET @ 500 PSI
SET @ 3000 PSI
82
DCV1
T
94
94
81
Y
16mm
CLOSED
D08
Y
X
80
UP STROKE
FC1
81

FIG. 21.

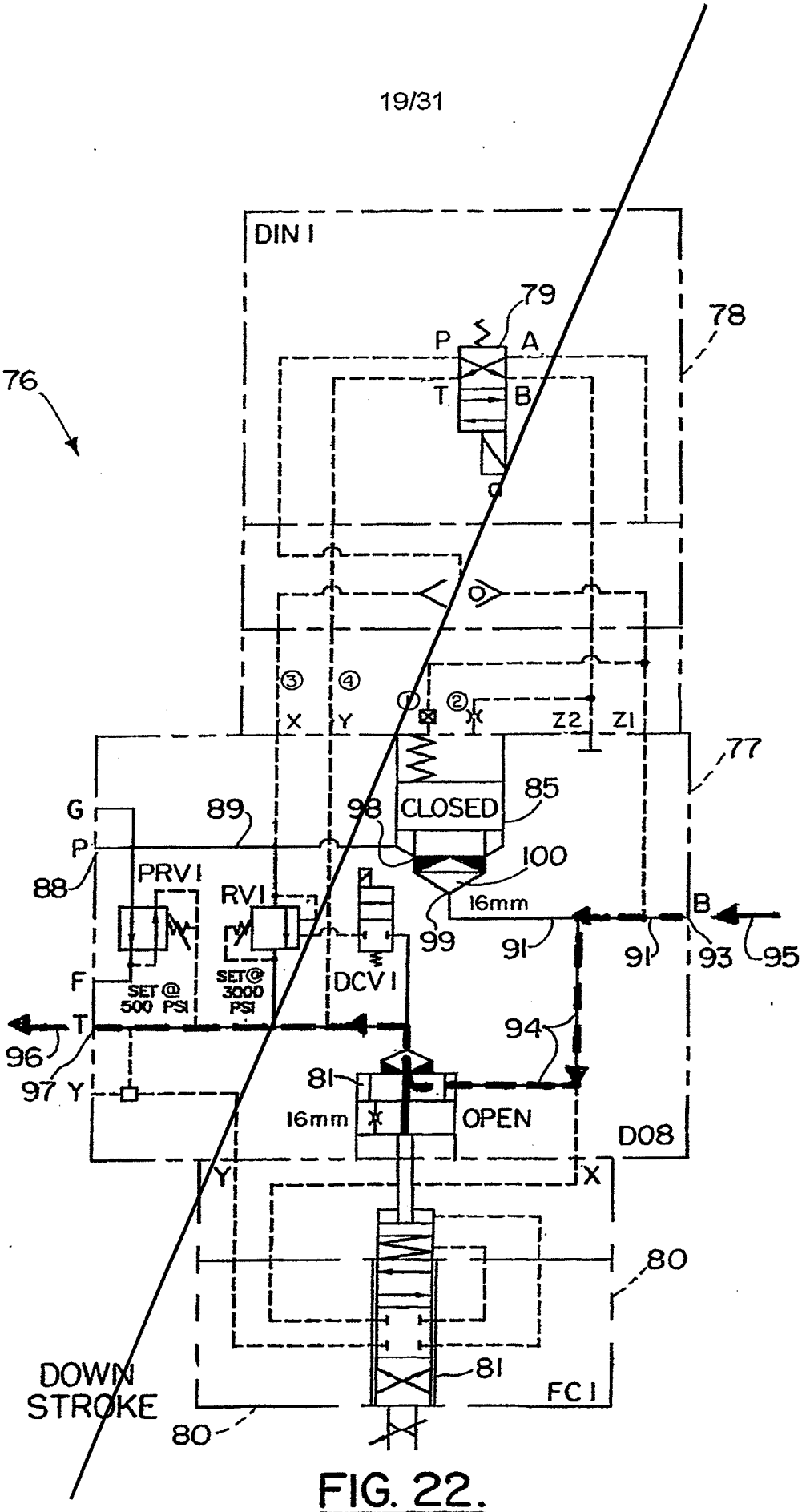
DIN I
79
78
P
A
T
B
76
77
③
④
①
②
X
Y
Z2
Z1
G
89
98
CLOSED
85
P
100
88
PRV I
RV I
16mm
B
99
91
91
93
95
F
SET @ 500 PSI
SET @ 3000 PSI
DCV I
94
T
96
97
Y
81
16mm
OPEN
D08
Y
X
80
81
DOWN STROKE
FC I
80

FIG. 22.

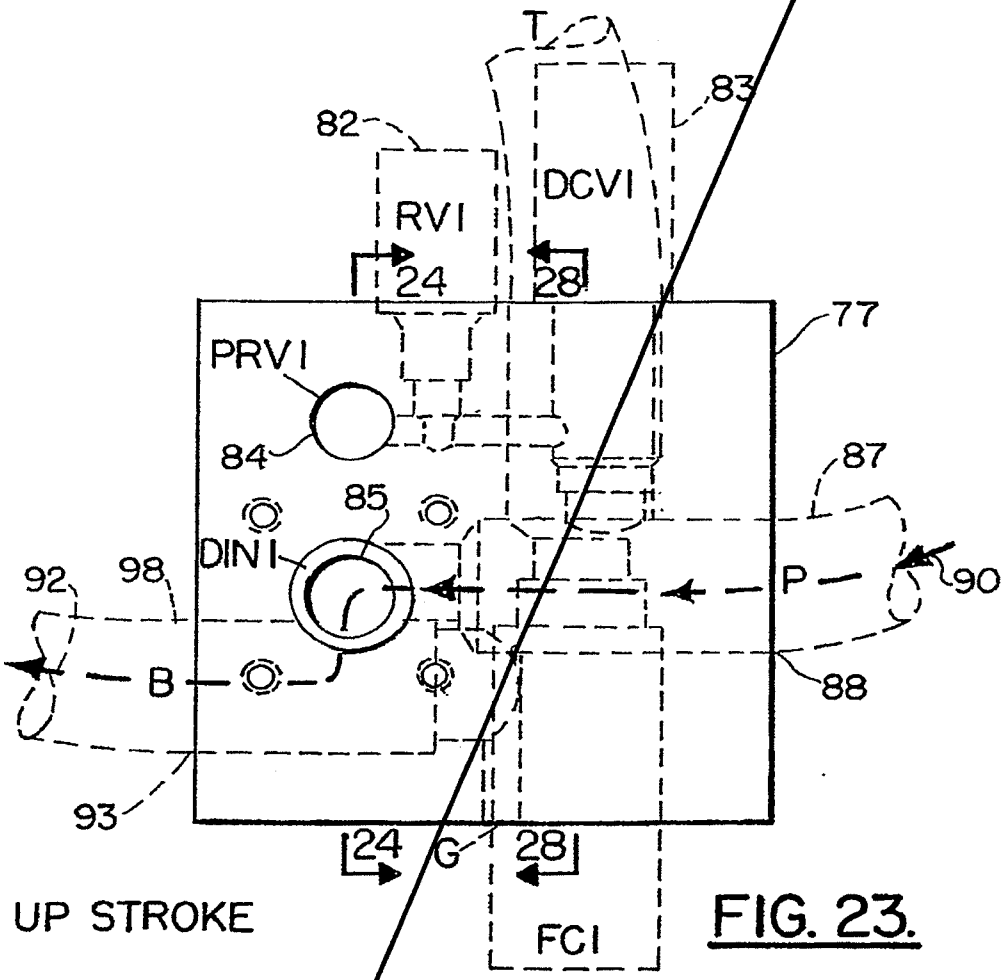
T
82
83
RVI
DCVI
24
28
77
PRVI
84
87
85
DIN I
92
98
P
90
B
88
93
24
G
28
UP STROKE
FCI

FIG. 23.

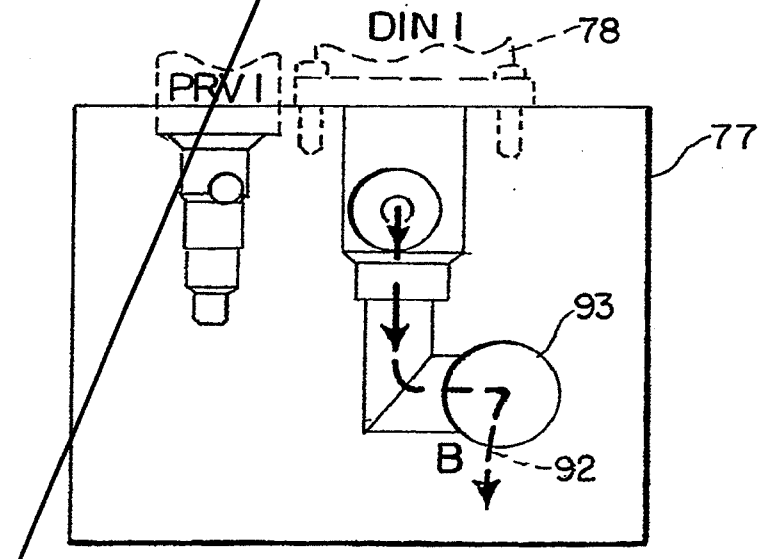
DIN I
78
PRVI
77
93
B
92

FIG. 24.

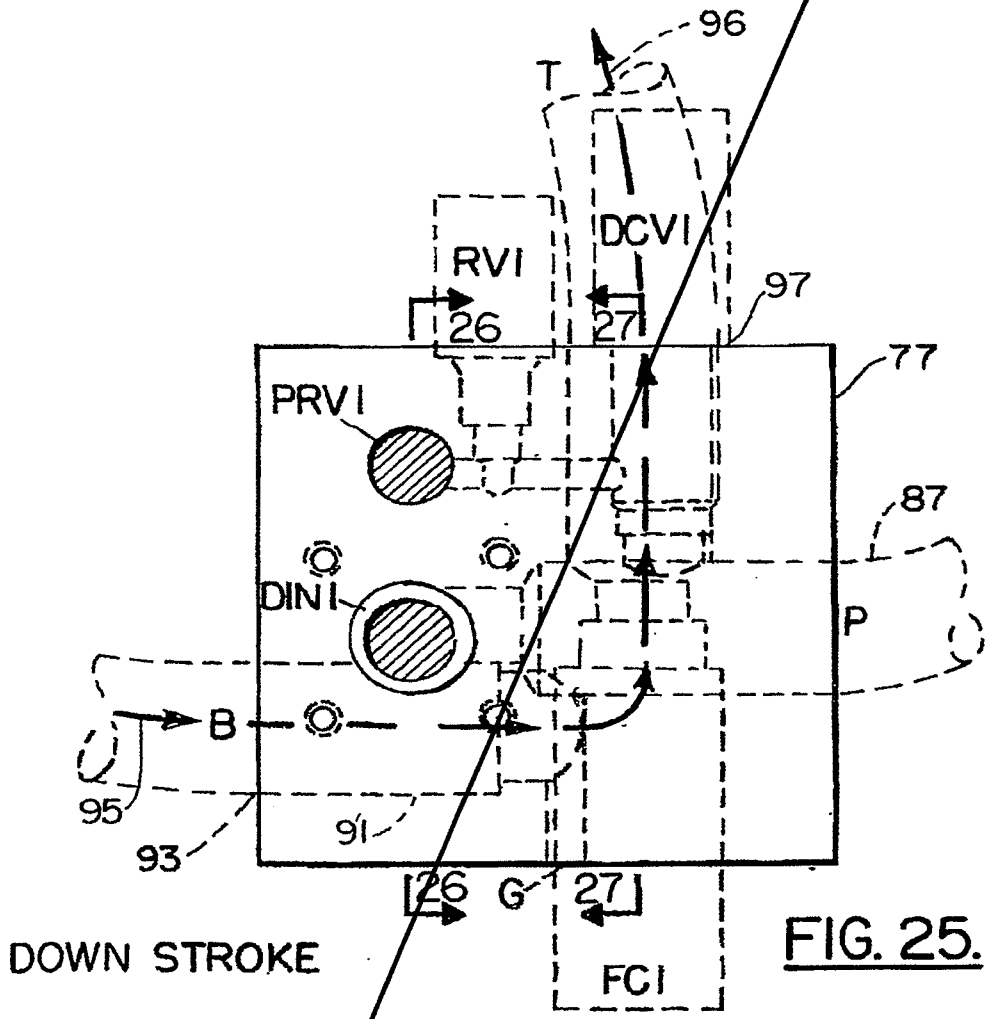
96
T
DCVI
RVI
26
27
97
77
PRVI
87
DIN I
P
B
95
93
91
26
G
27
FCI
DOWN STROKE

FIG. 25.

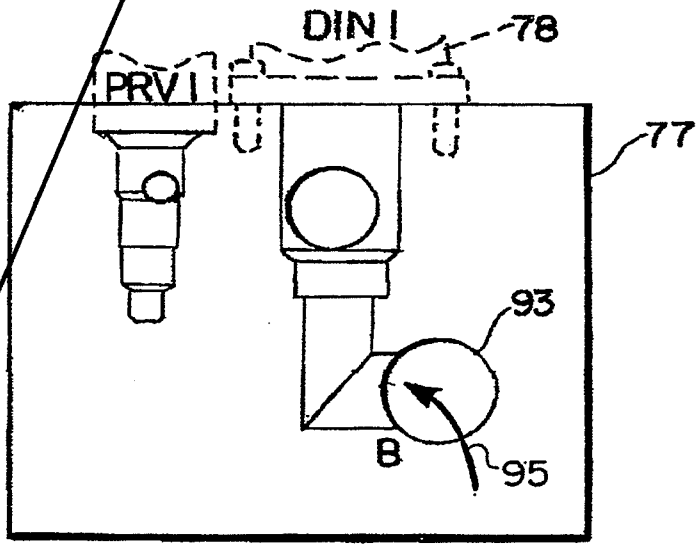
DIN I
78
PRVI
77
93
B
95

FIG. 26.

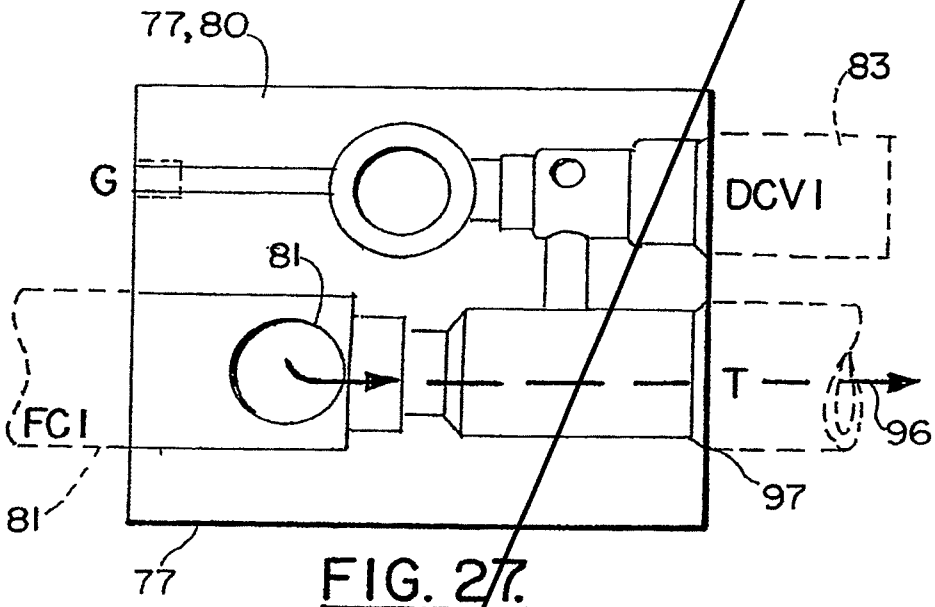

FIG. 27.

DOWN STROKE

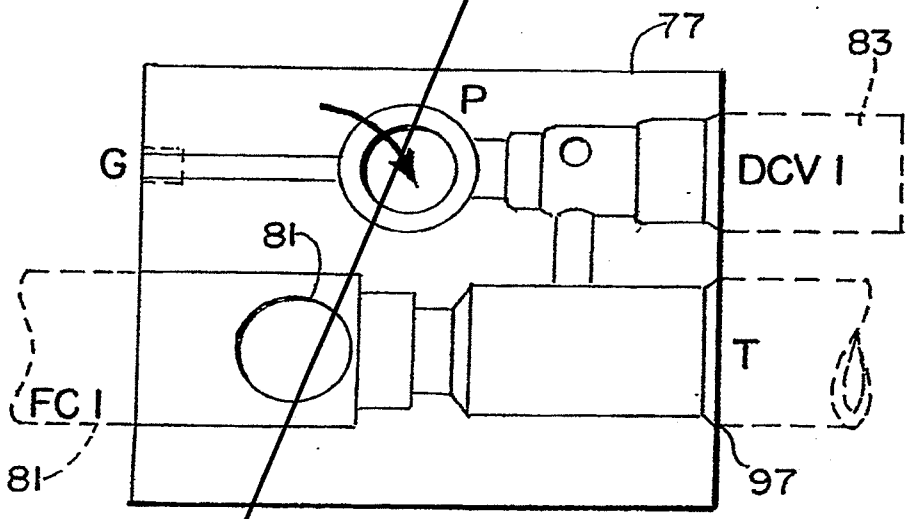

FIG. 28.

UP STROKE

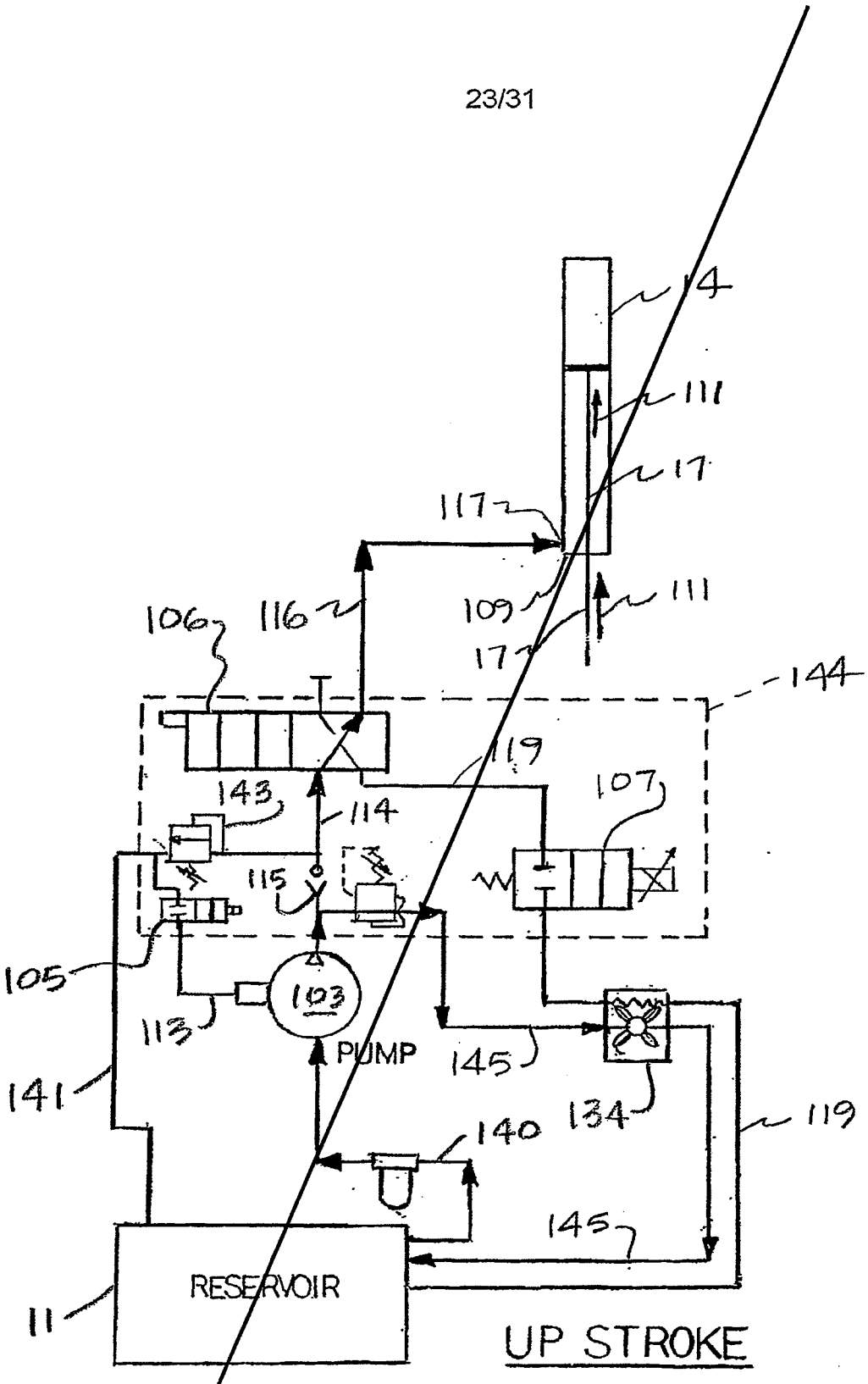
4
111
17
117
111
109
17
106
116
144
119
143
114
107
115
105
103
113
PUMP
145
141
134
119
140
145
RESERVOIR
11
UP STROKE

FIG. 29.

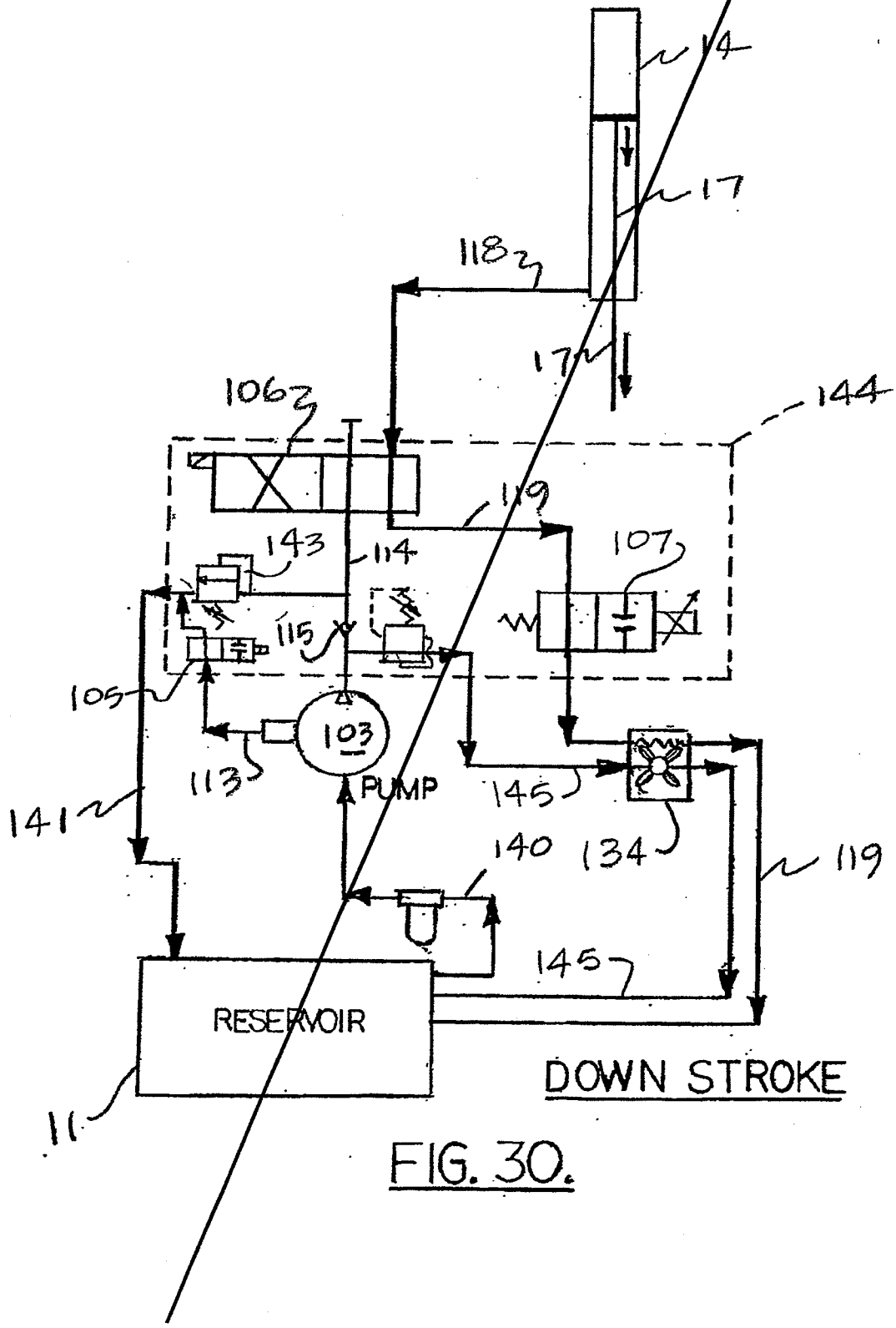
14
17
118
17
106
144
119
143
114
107
115
105
103
PUMP
113
145
141
140
134
119
145
RESERVOIR
11
DOWN STROKE

FIG. 30.

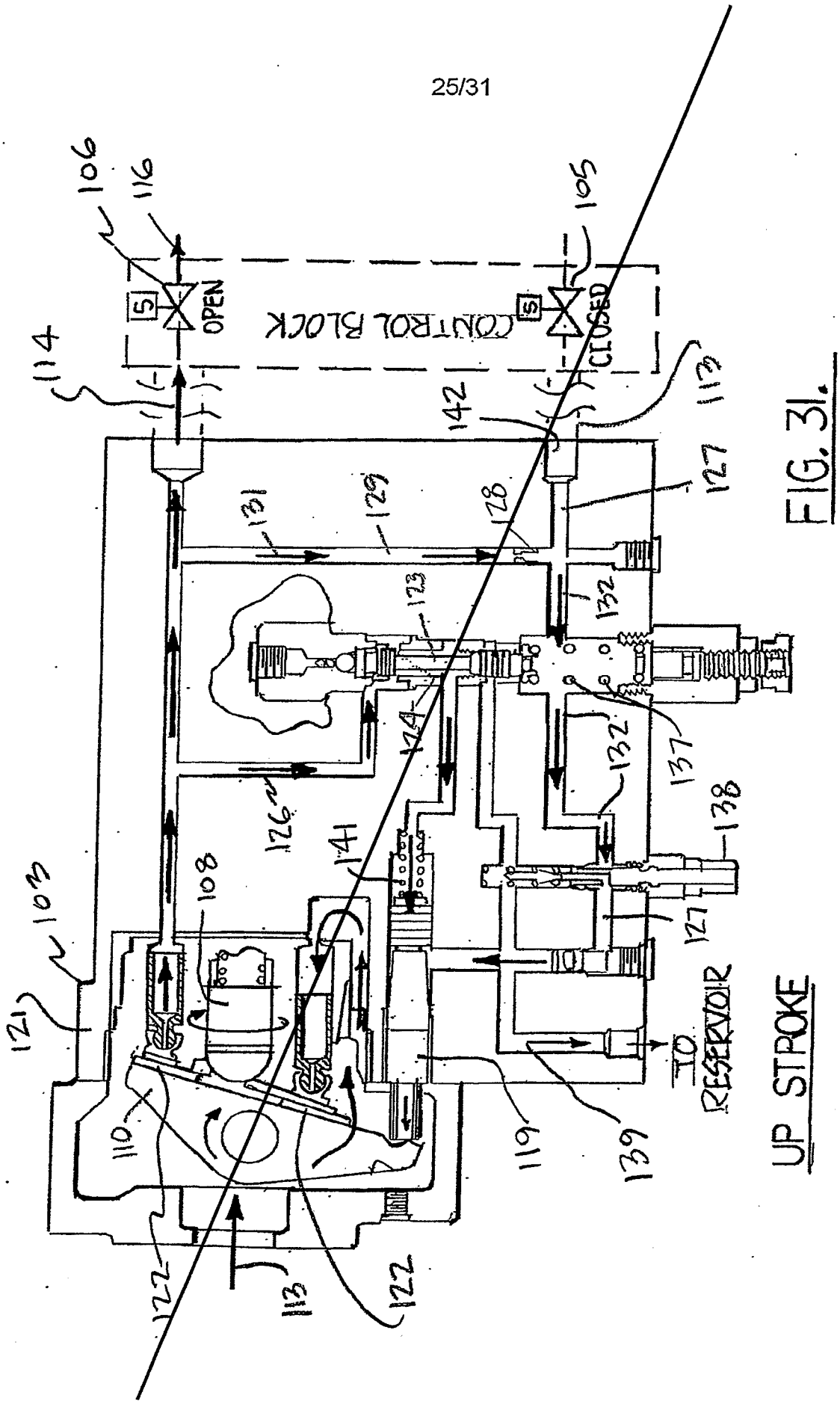

FIG. 31.

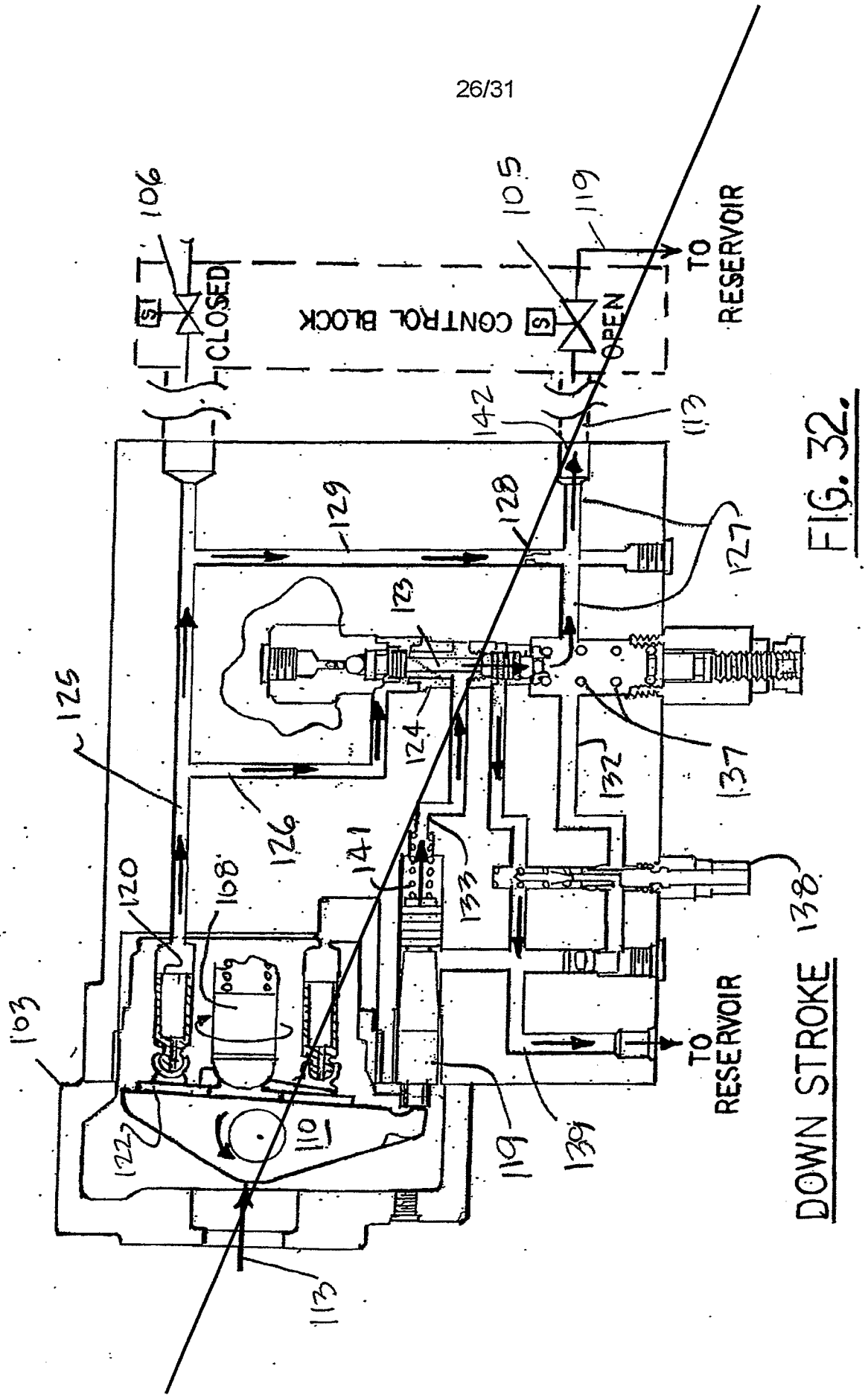
106
105
119
TO RESERVOIR
CLOSED
CONTROL BLOCK
OPEN
142
113
129
128
127
123
125
124
137
132
126
141
133
120
108
138
103
TO RESERVOIR
122
110
119
139
117
DOWN STROKE

FIG. 32.

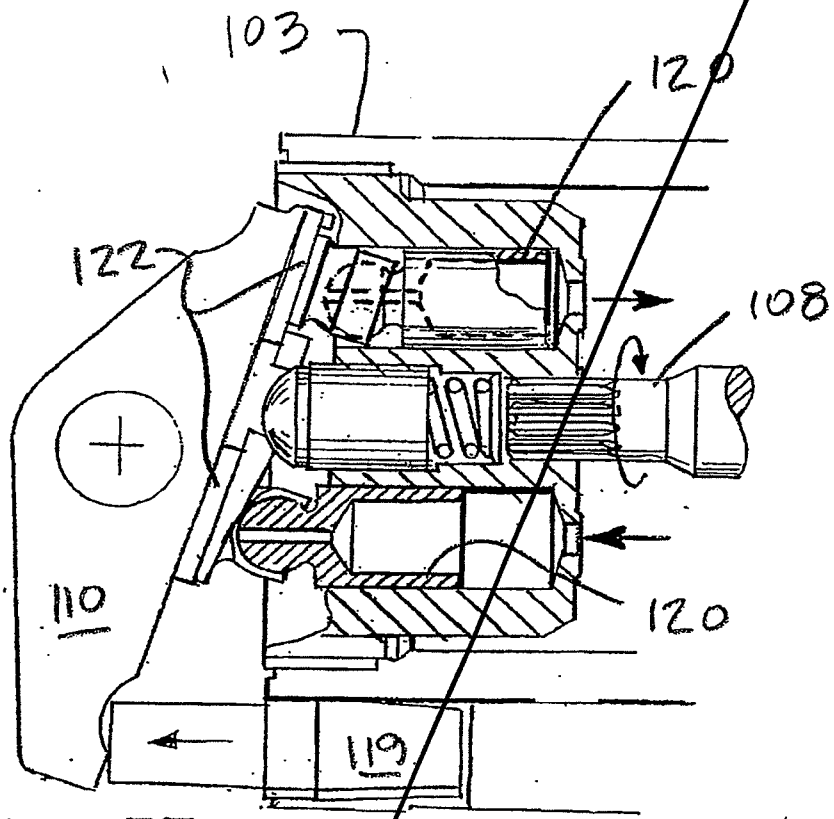
103
120
122
108
110
120
119

FIG. 33.

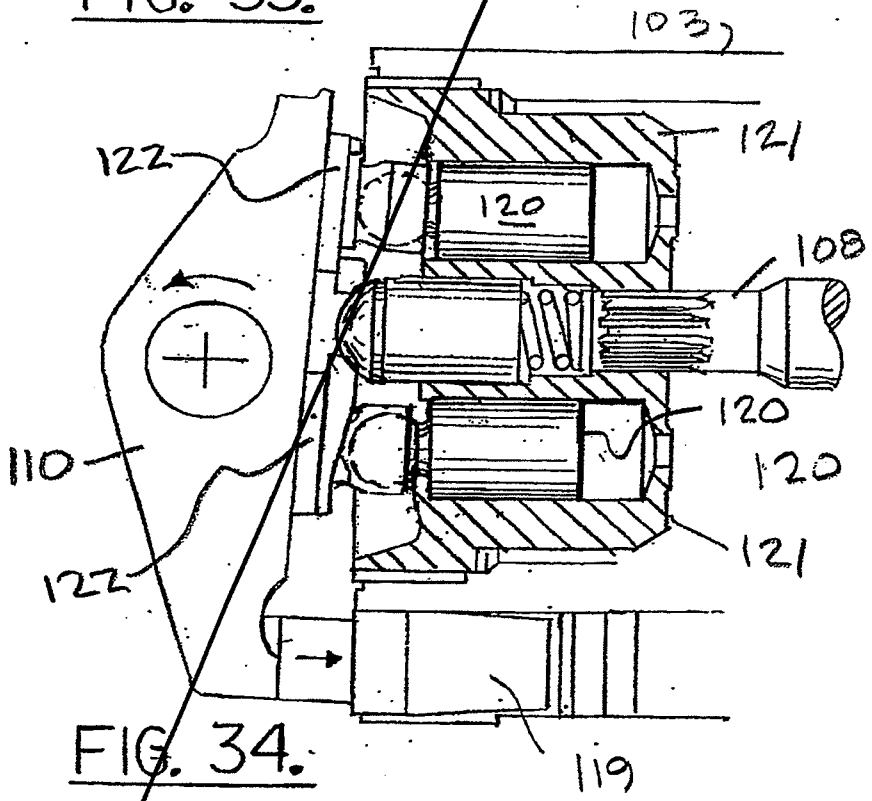
103
121
122
120
108
110
120
120
122
121
119

FIG. 34.

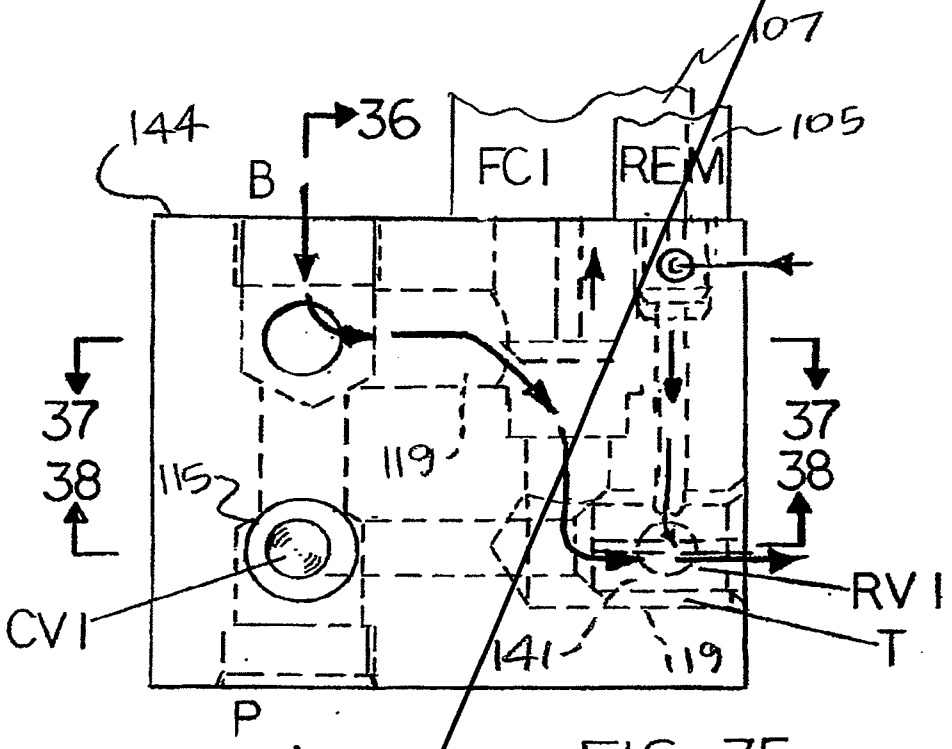

FIG. 35.
DOWN STROKE

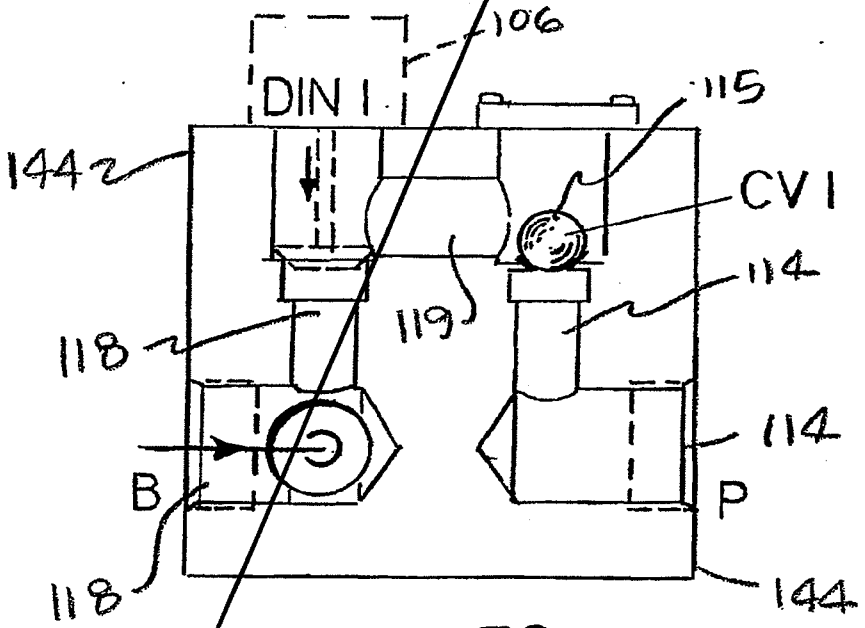

FIG. 36.
DOWN STROKE

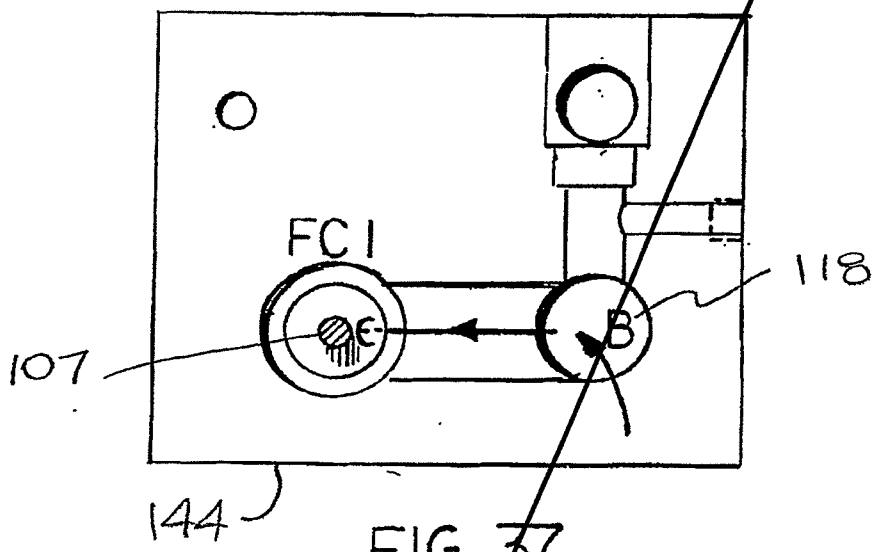

FIG. 37.
DOWN STROKE

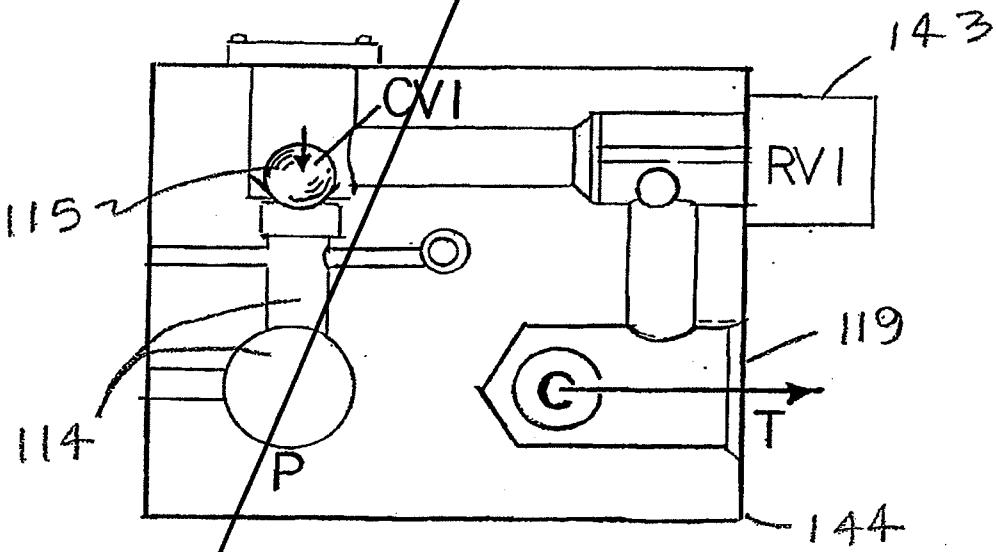

FIG. 38
DOWN STROKE

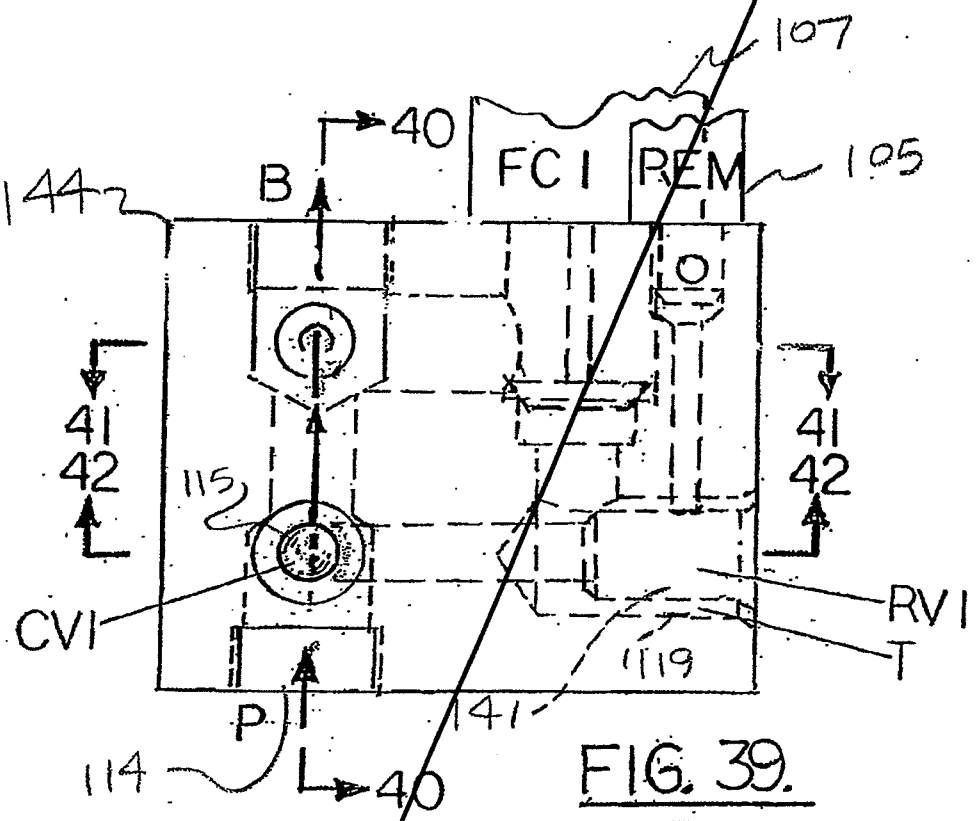

FIG. 39.
UP STROKE

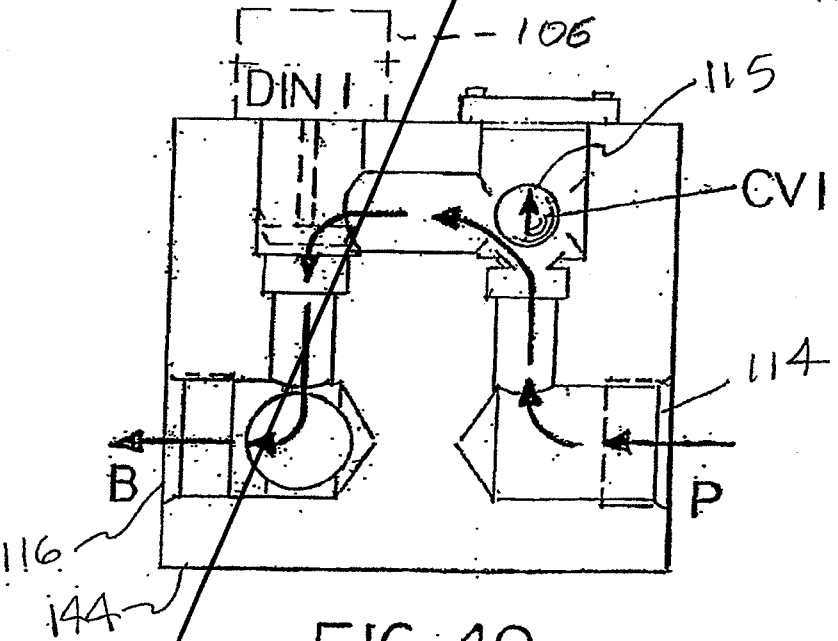

FIG. 40.
UP STROKE

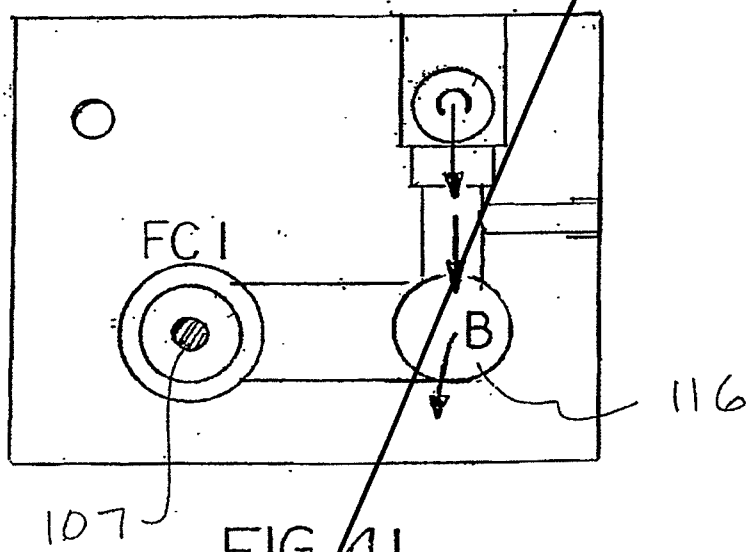

FIG. 41.
UP STROKE

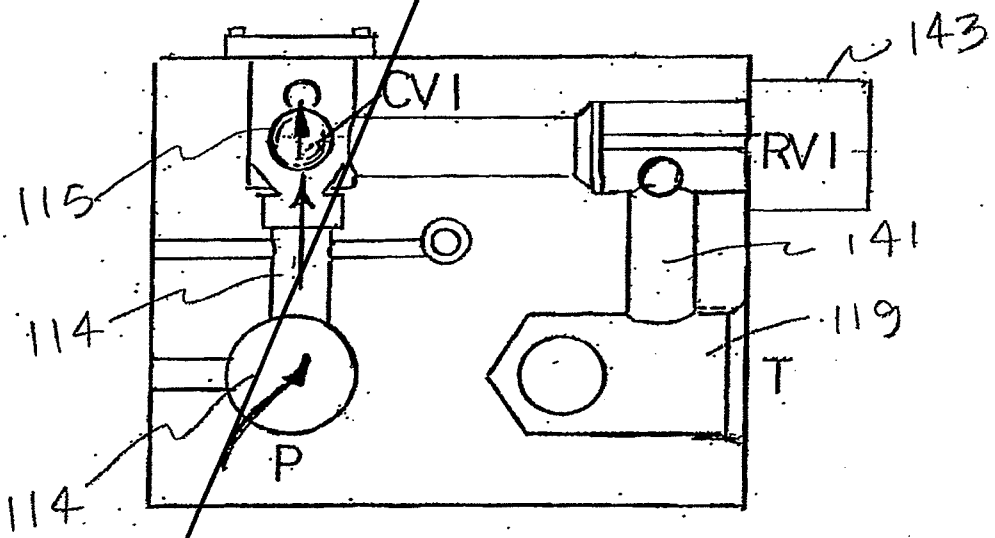

FIG. 42.
UP STROKE

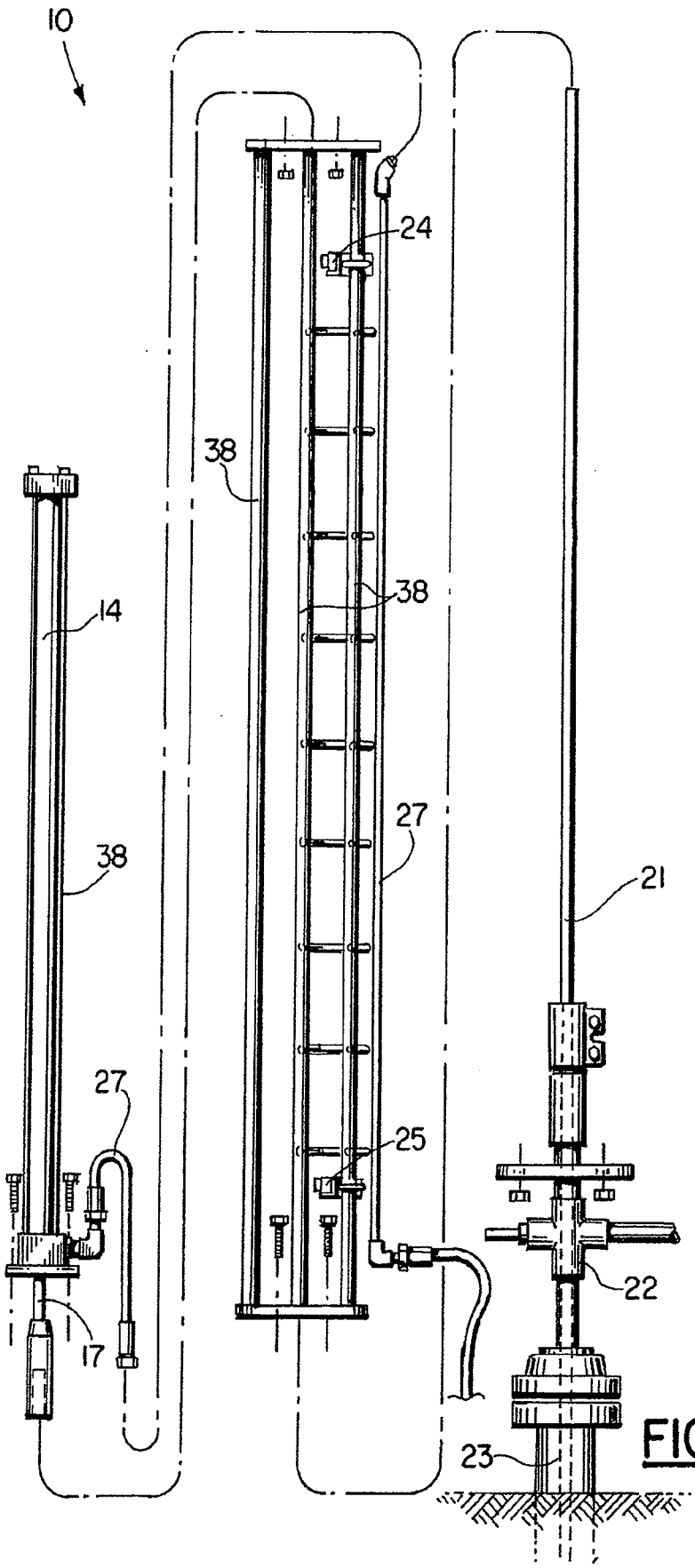

FIG. 1.

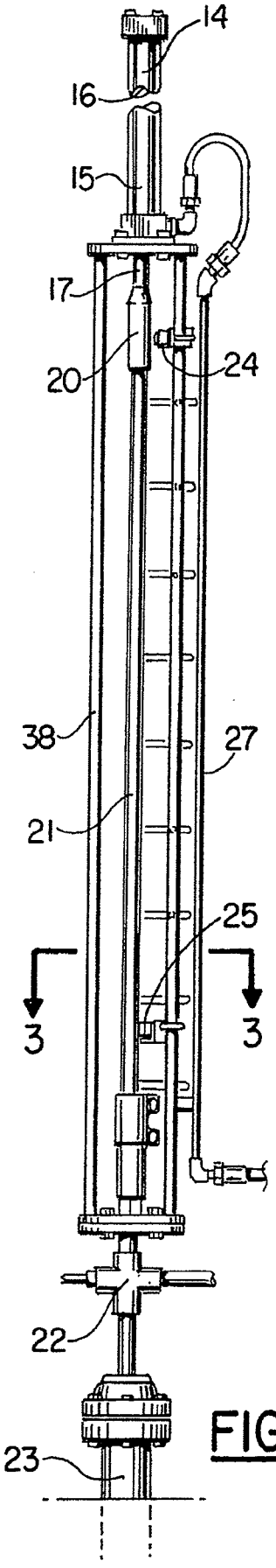

FIG. 2.

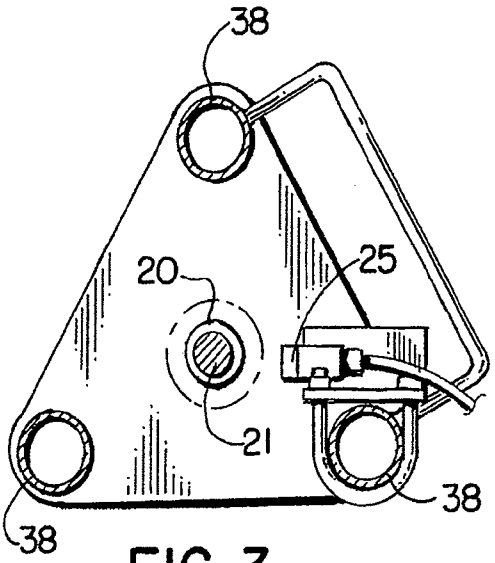

FIG. 3.

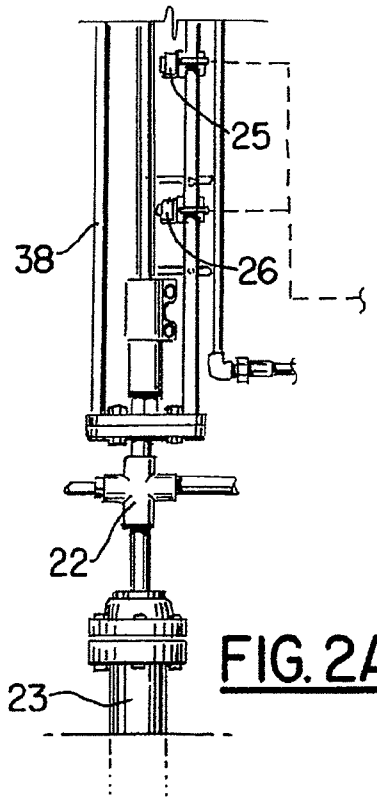

FIG. 2A.

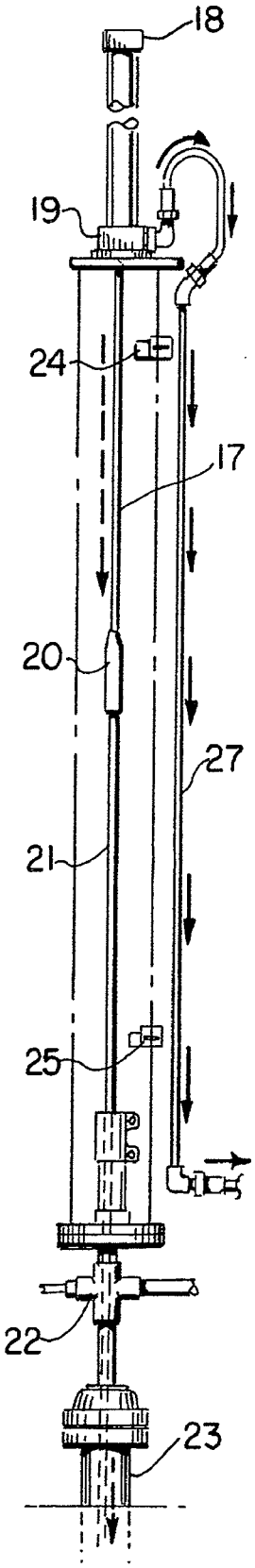

FIG. 4A.

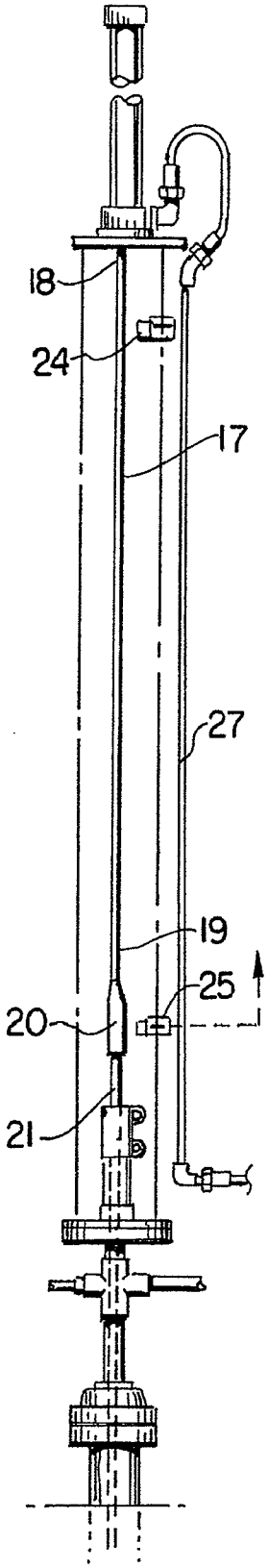

FIG. 4B.

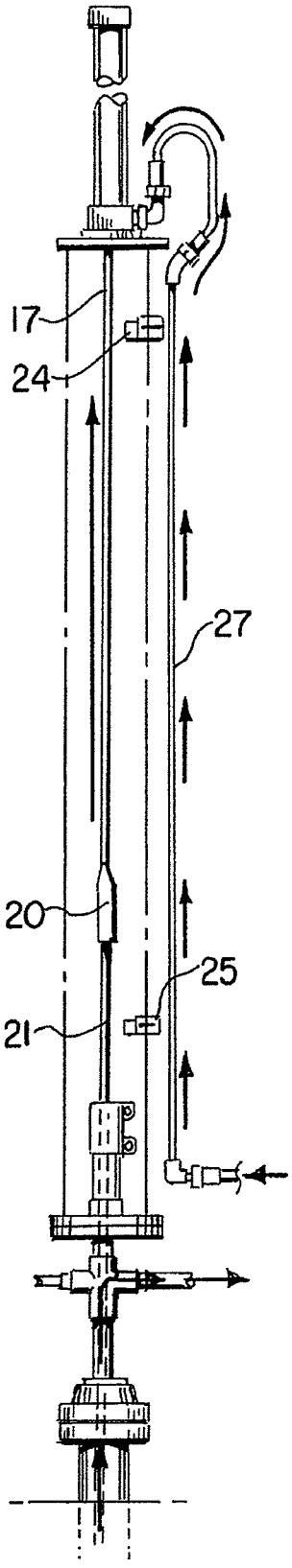

FIG. 4C.

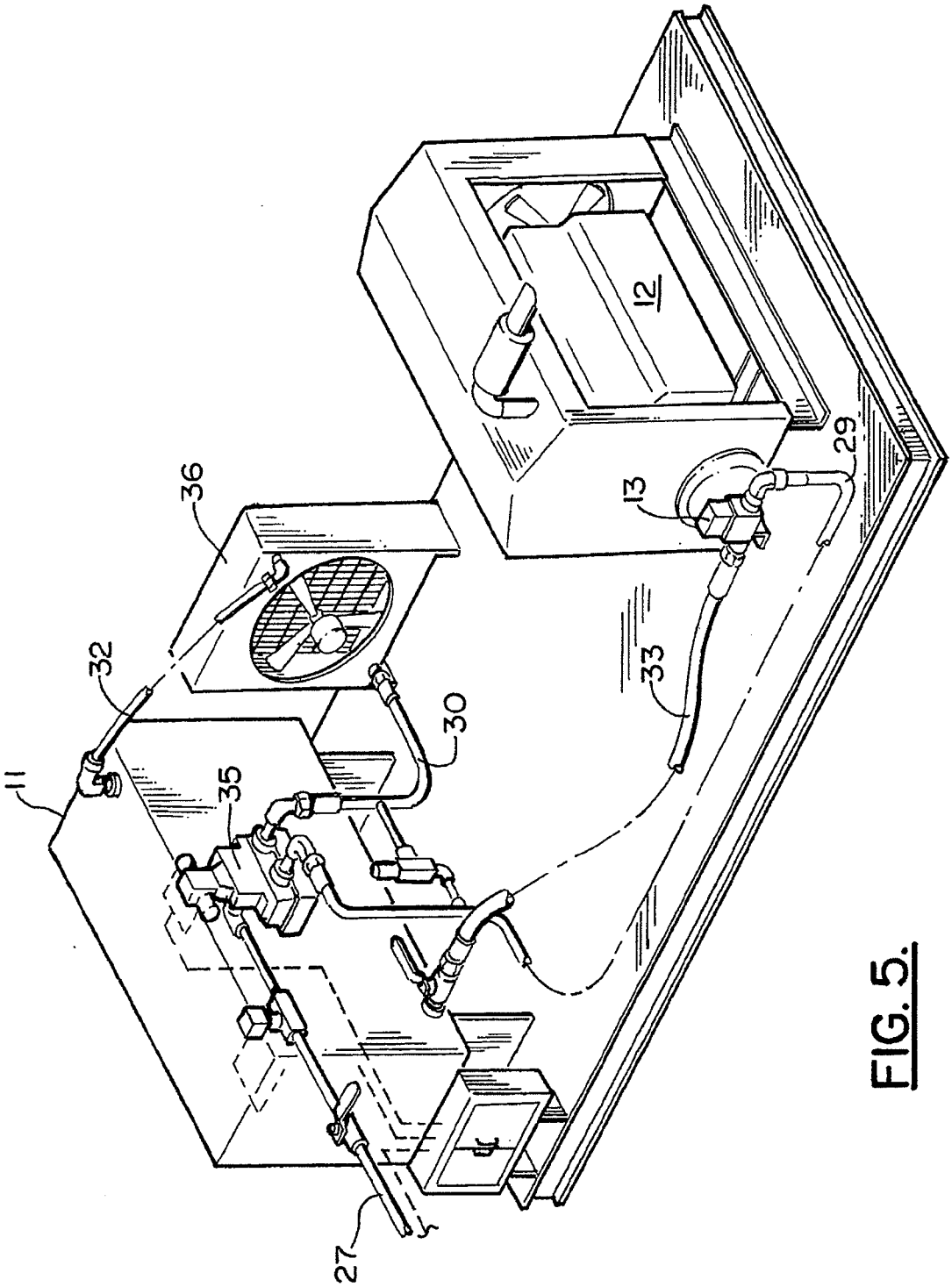

FIG. 5.

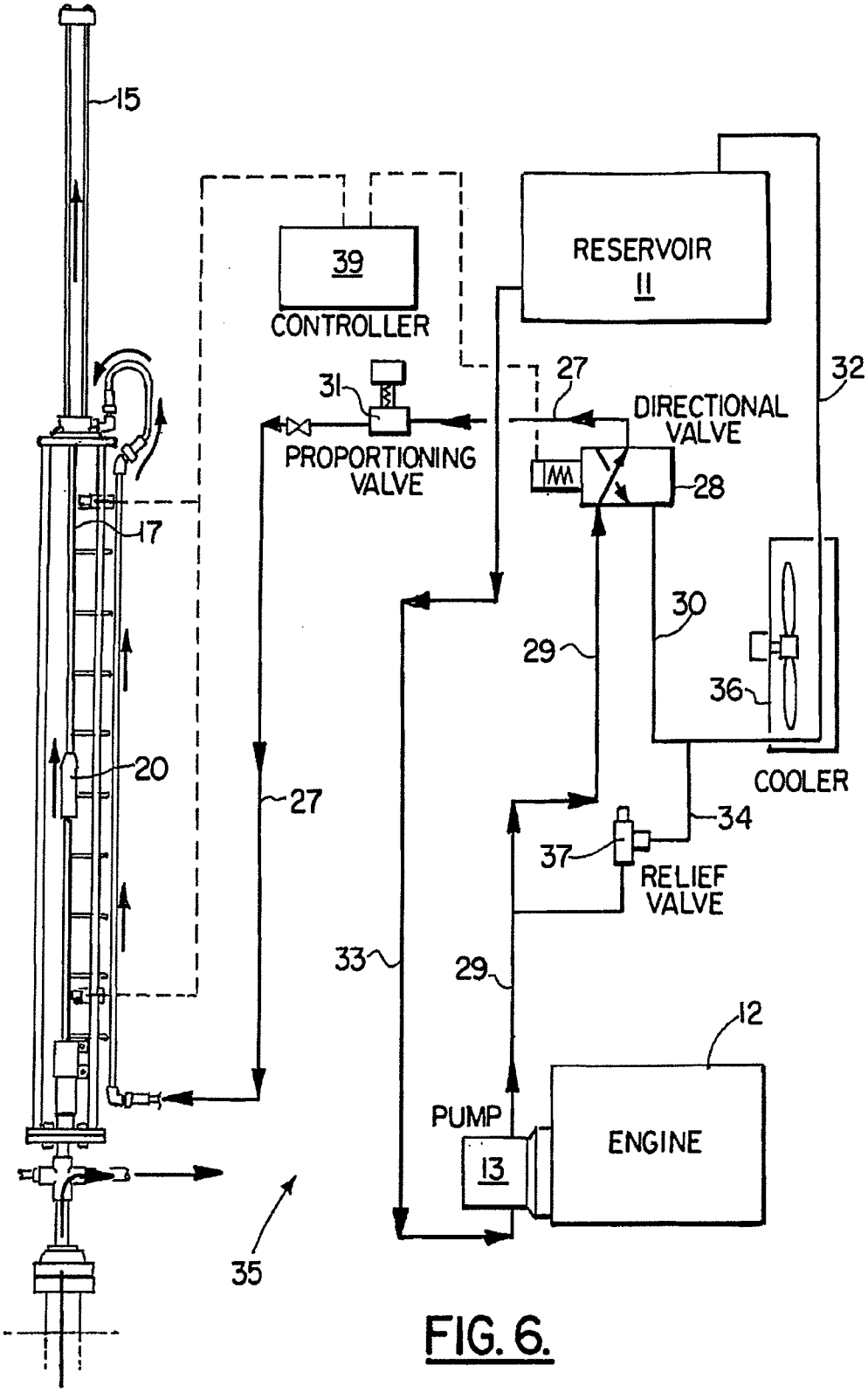
15
39
CONTROLLER
RESERVOIR
11
32
31
27
DIRECTIONAL
VALVE
PROPORTIONING
VALVE
28
17
30
29
36
20
27
COOLER
34
37
RELIEF
VALVE
33
29
12
PUMP
13
ENGINE
35

FIG. 6.

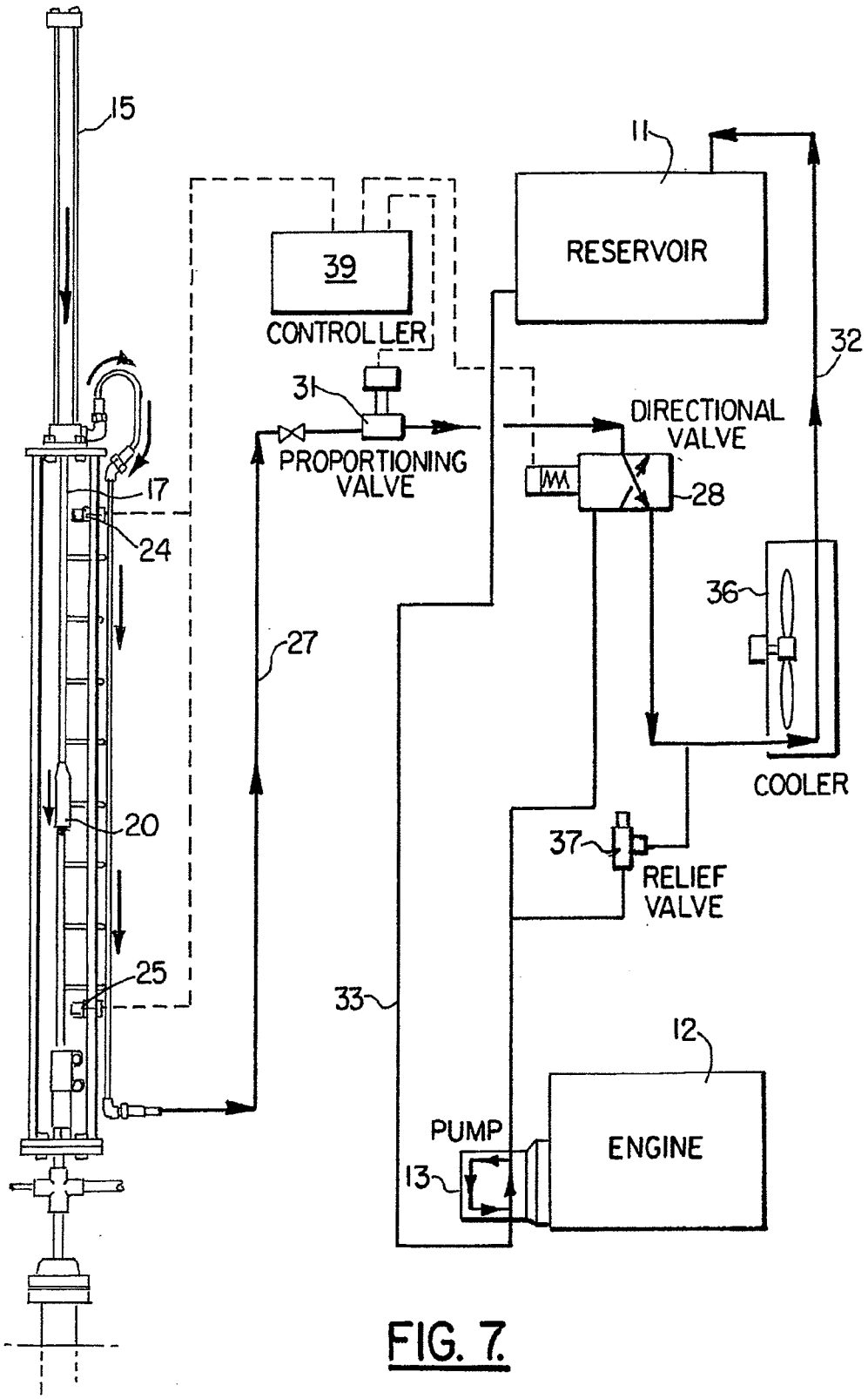
15
11
RESERVOIR
39
CONTROLLER
32
31
PROPORTIONING VALVE
DIRECTIONAL VALVE
17
28
24
36
27
COOLER
20
37
RELIEF VALVE
25
33
12
PUMP
ENGINE
13

FIG. 7.

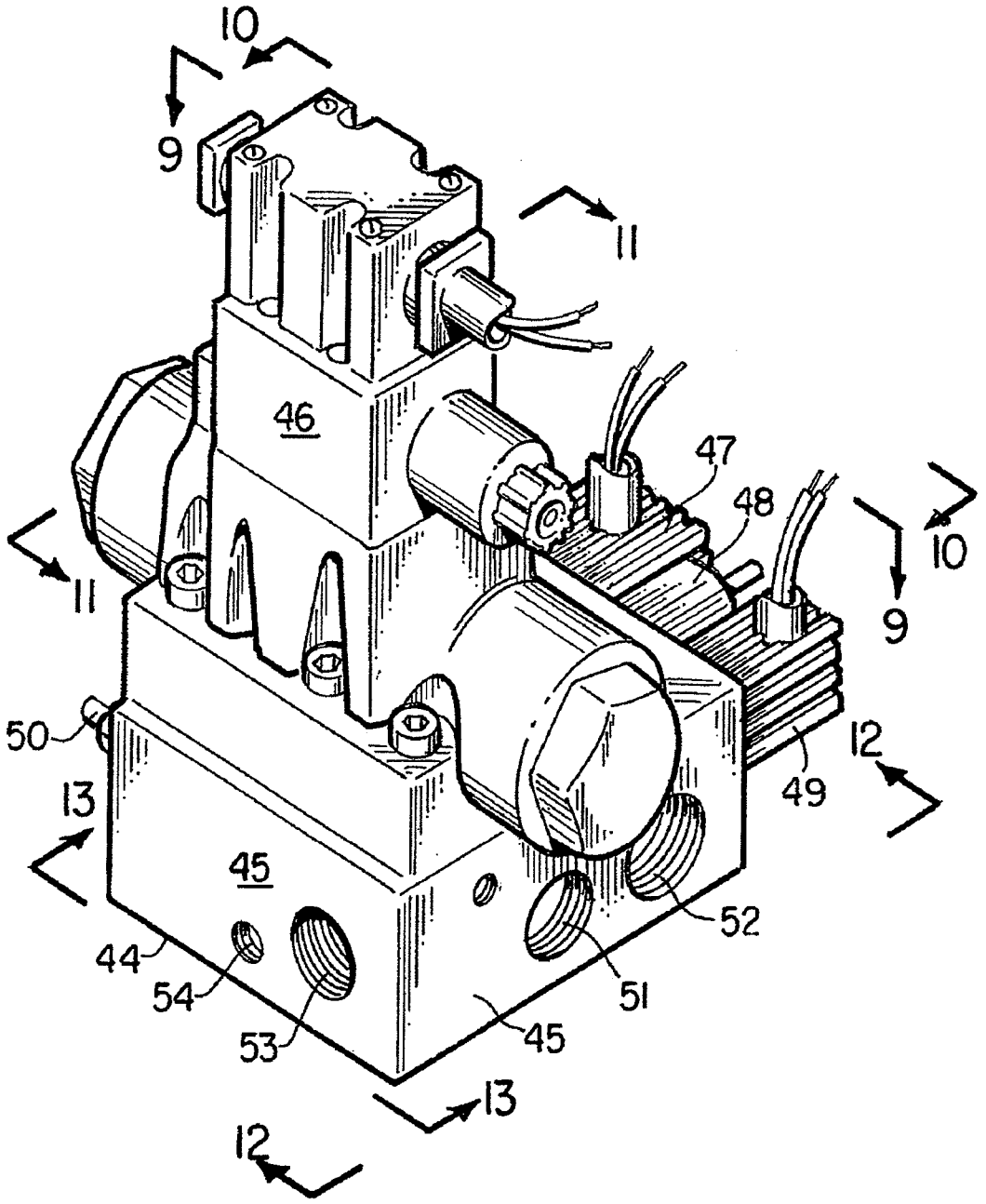

FIG. 8.

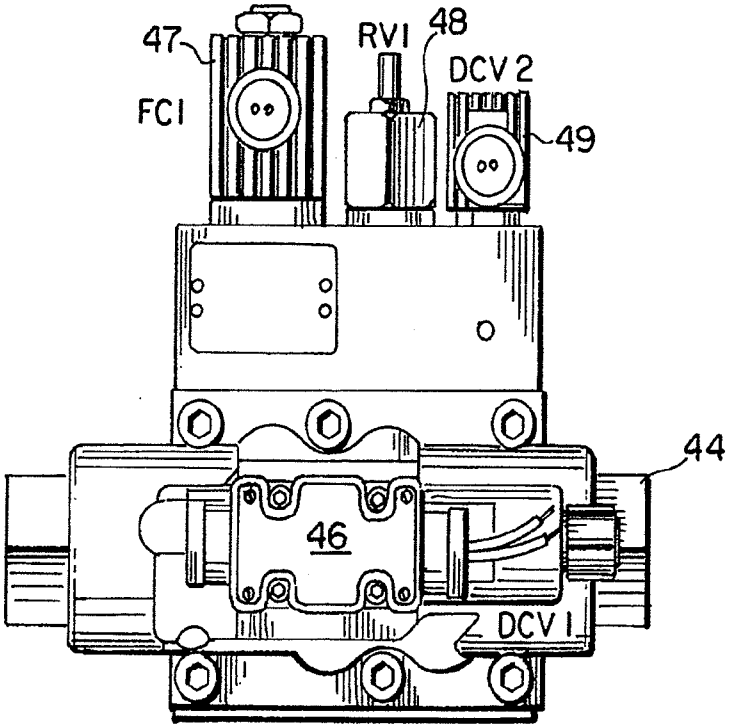
47
RV1
48
DCV 2
FC1
49
44
46
DCV 1

FIG. 9.

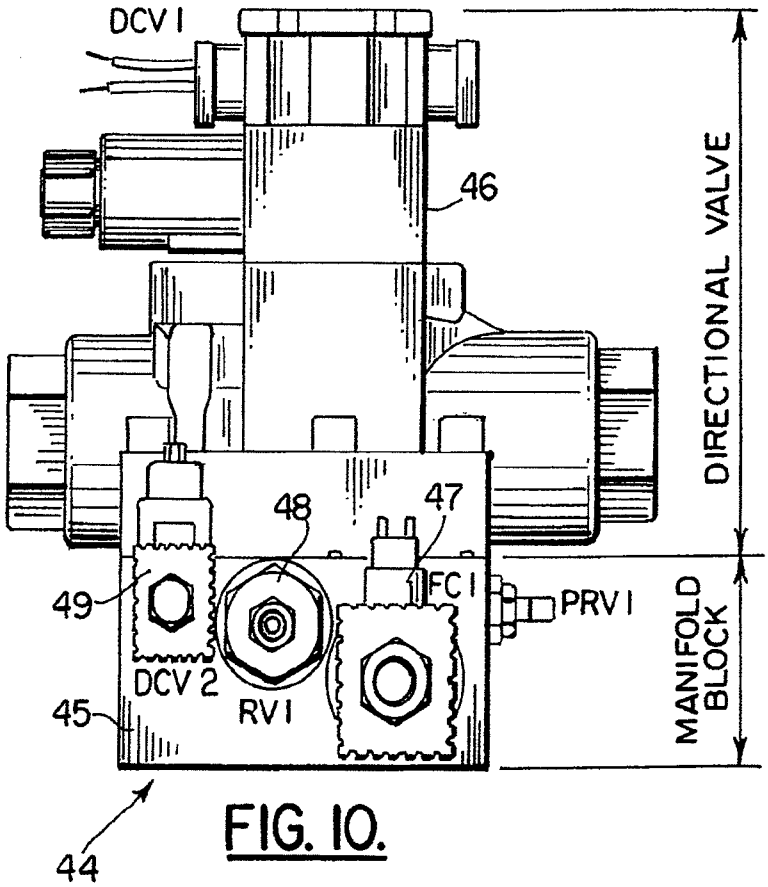
DCV 1
46
DIRECTIONAL VALVE
48
47
49
FC1
PRV1
DCV 2
RV1
45
MANIFOLD BLOCK
44

FIG. 10.

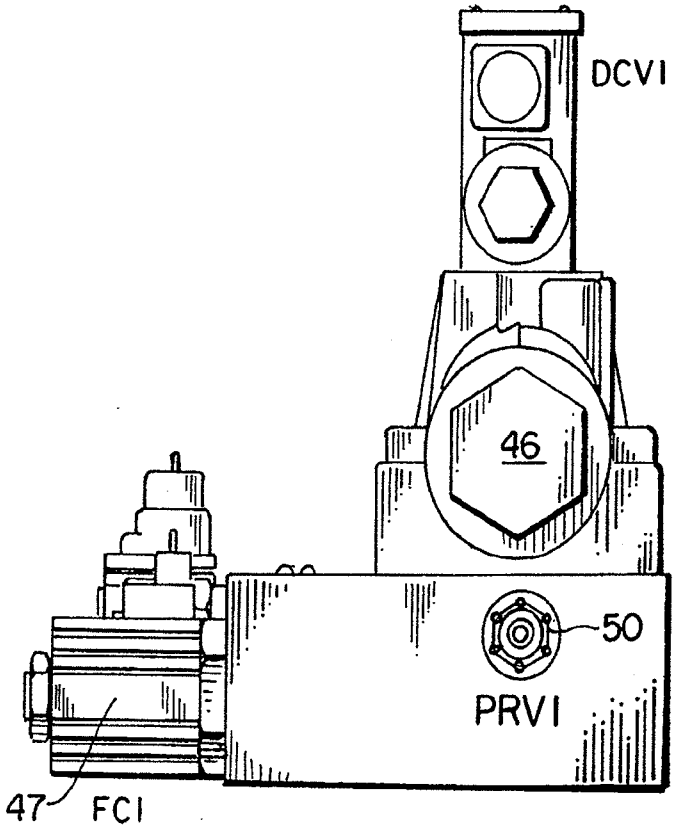

FIG. 11.

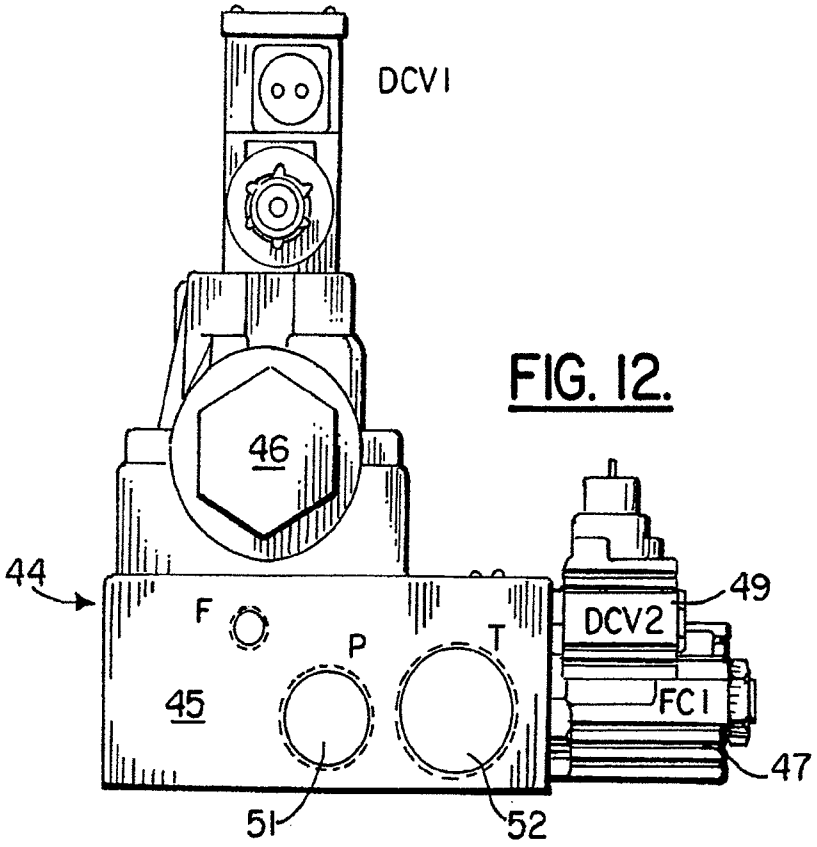

FIG. 12.

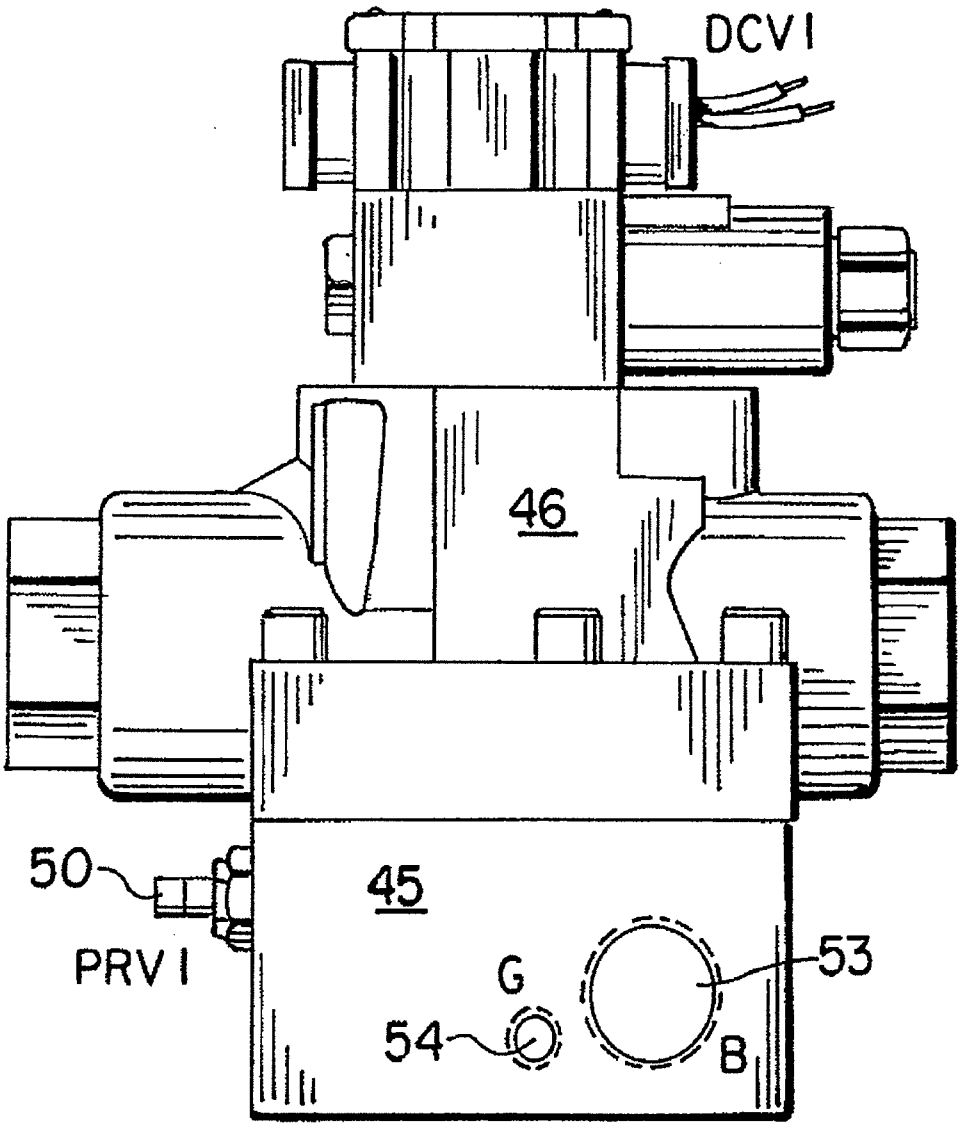

FIG. 13.

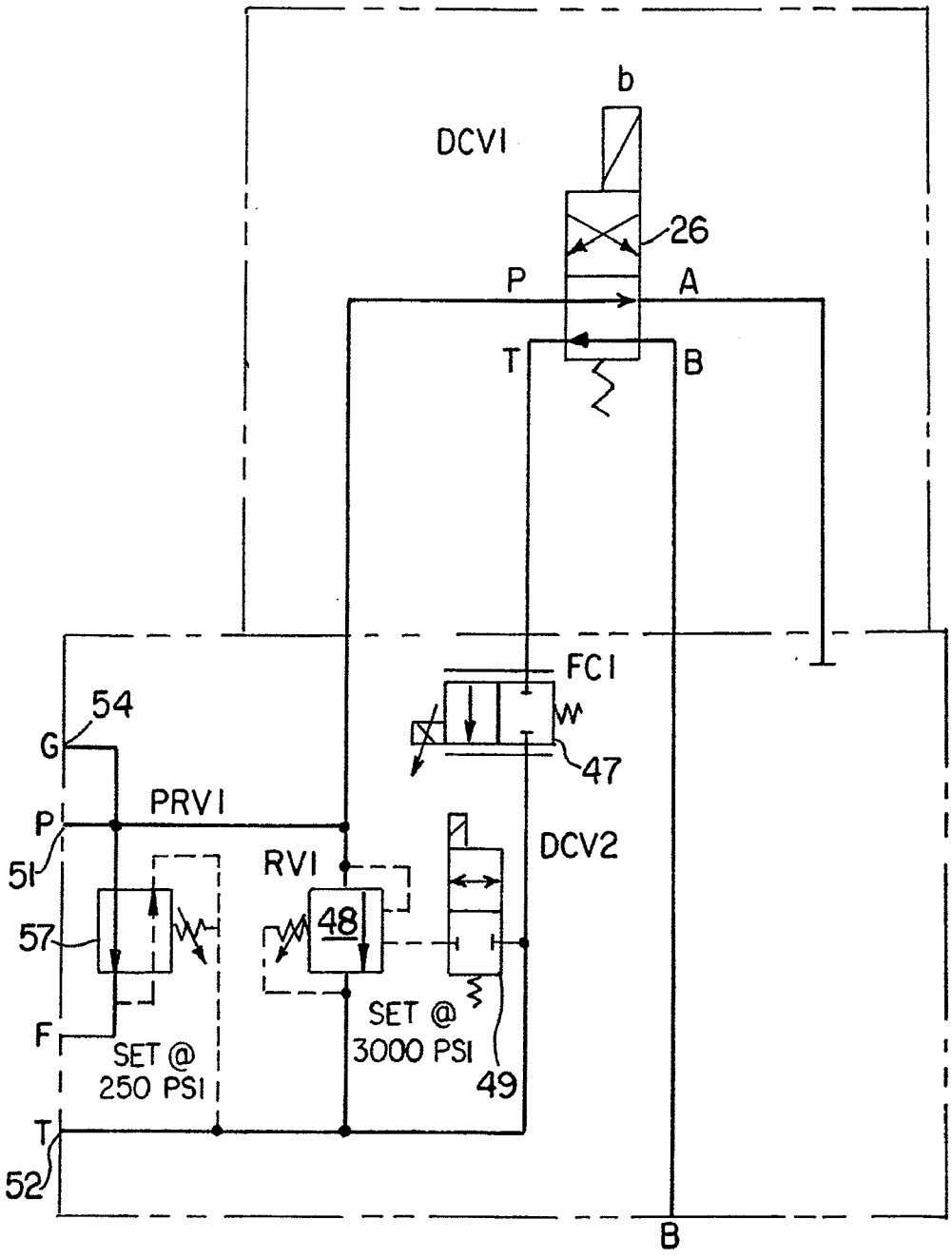
b
DCV1
26
P
A
T
B
FC1
47
54
G
PRV1
P
51
RV1
48
DCV2
57
F
SET @
250 PSI
SET @
3000 PSI
49
T
52
B

FIG. 14.

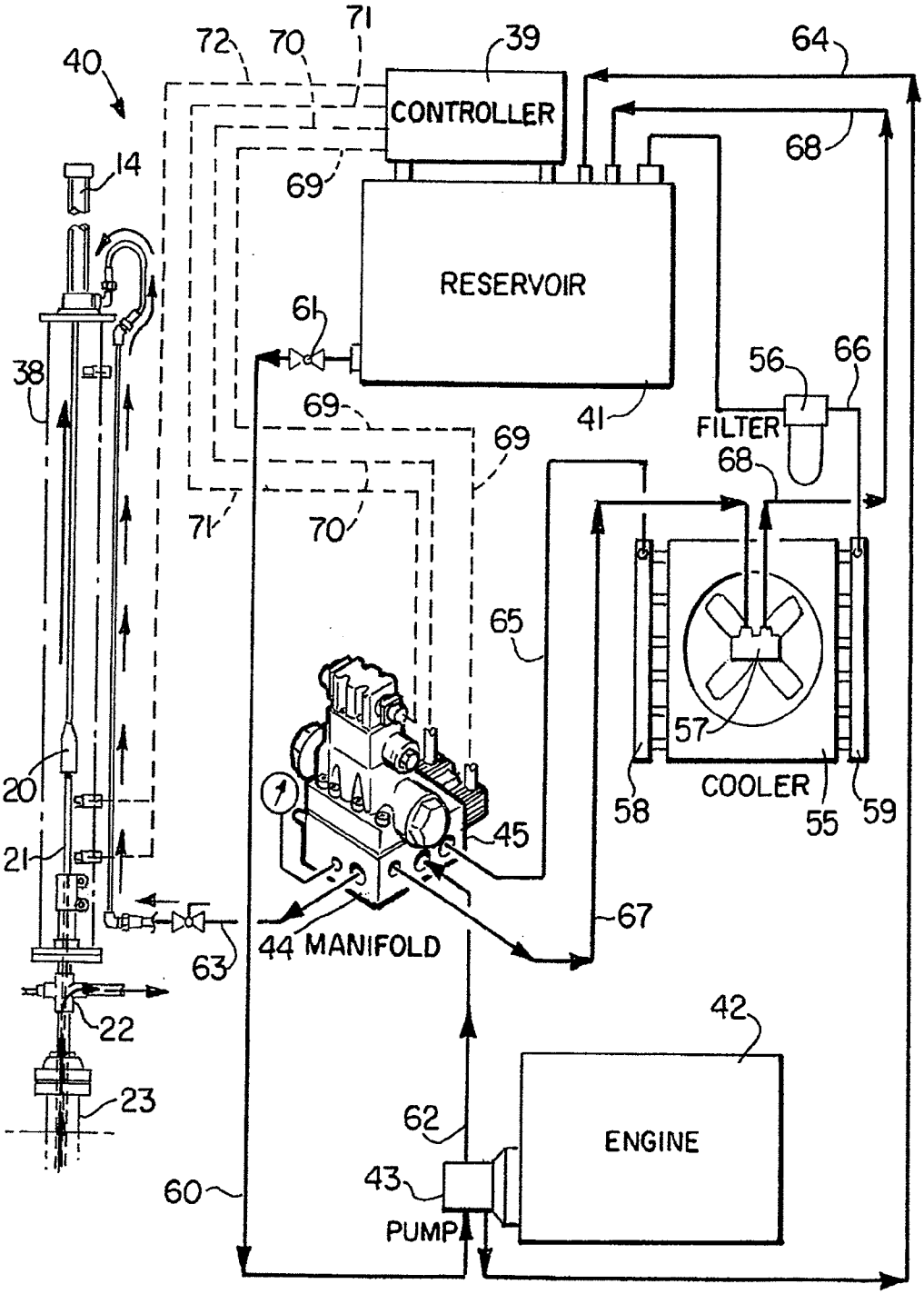
40
72
70
71
39
64
CONTROLLER
68
14
69
RESERVOIR
61
38
56
66
69
41
FILTER
69
68
71
70
65
57
20
COOLER
58
55
59
45
21
67
44 MANIFOLD
63
42
22
23
62
ENGINE
43
60
PUMP

FIG. 15.

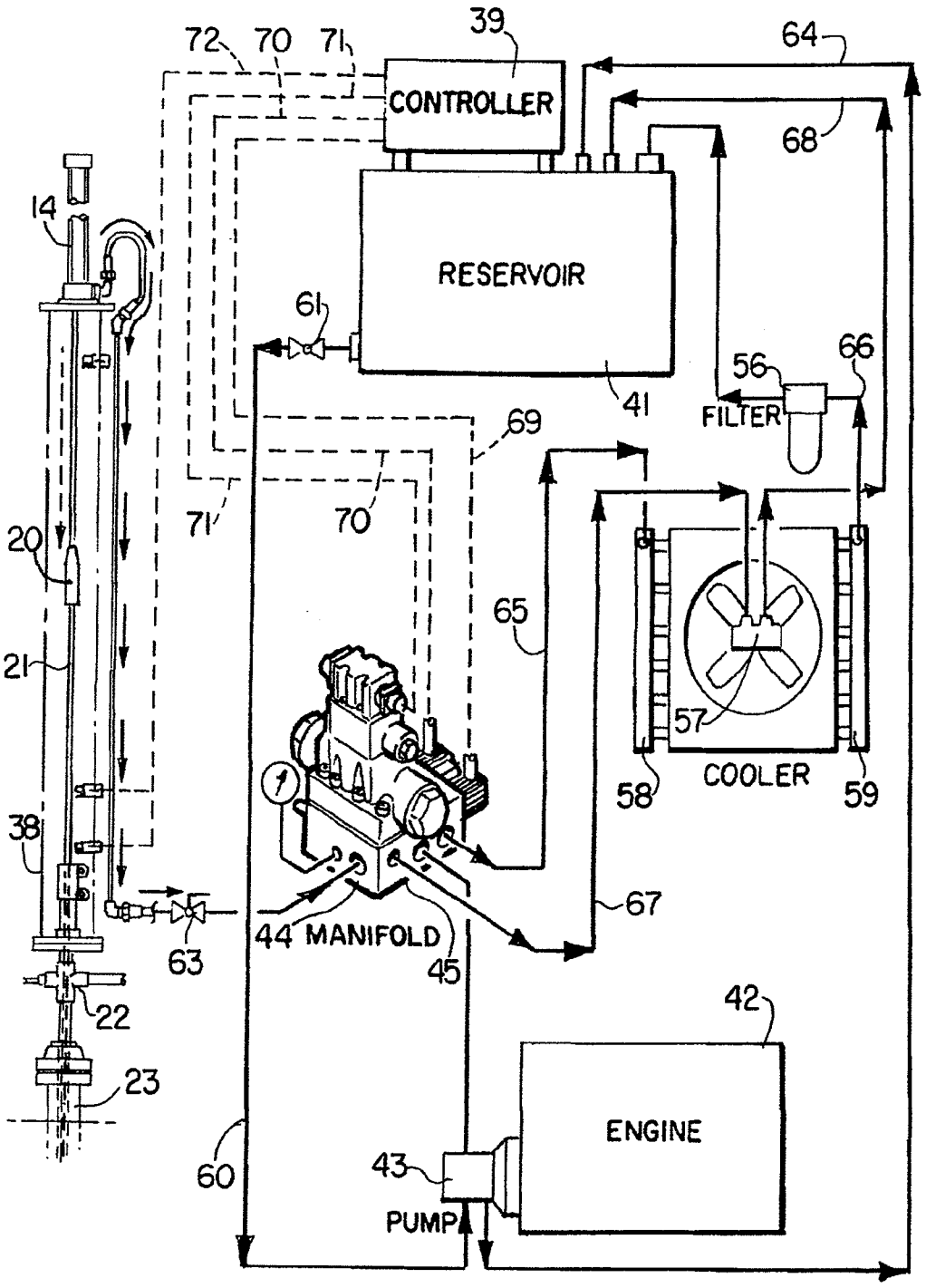
72
70
71
39
CONTROLLER
64
68
14
RESERVOIR
61
56
66
FILTER
41
69
71
70
20
65
21
57
COOLER
58
59
38
67
44
MANIFOLD
45
63
22
42
23
ENGINE
60
43
PUMP

FIG. 16.

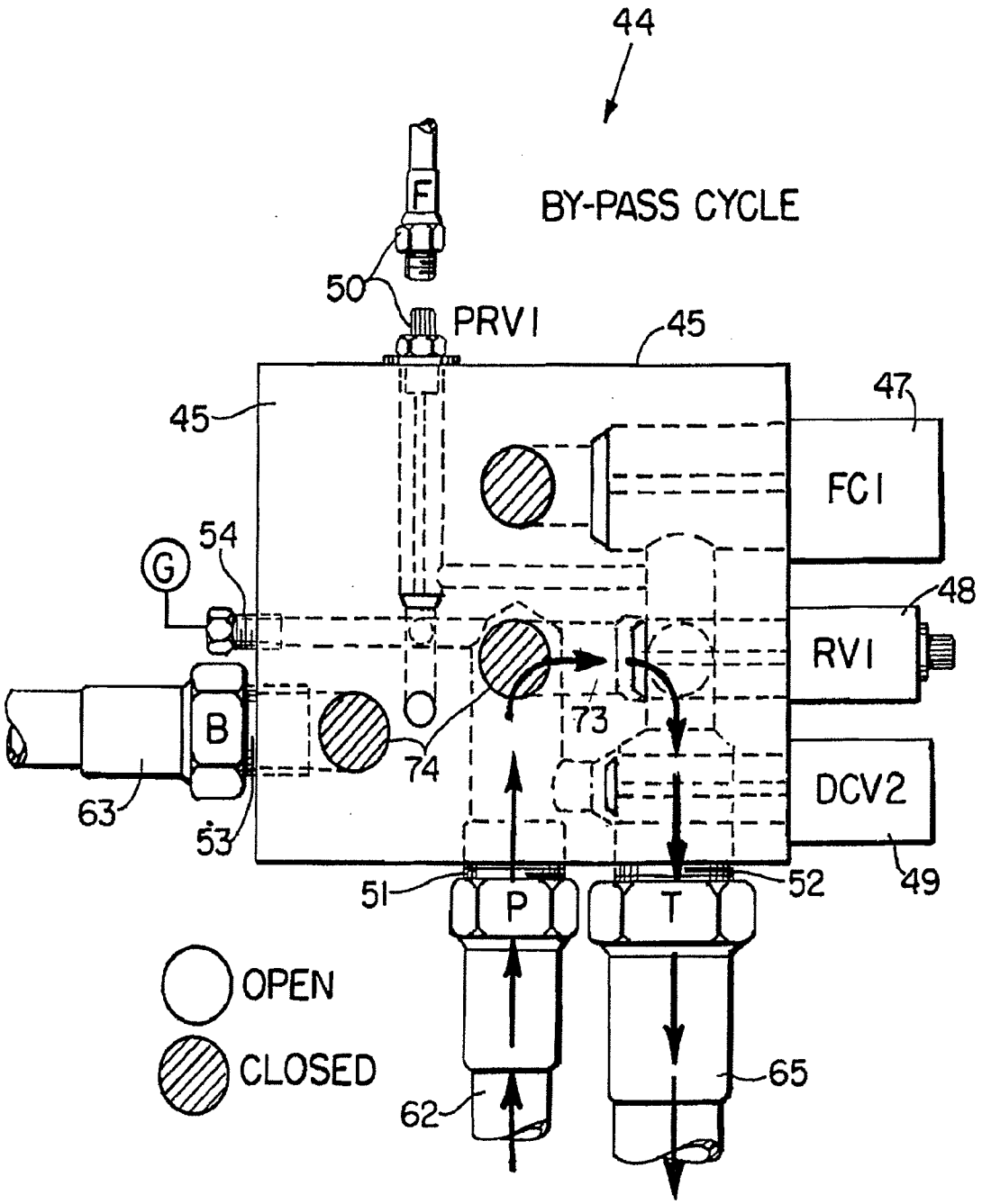
44
BY-PASS CYCLE
F
50
PRV1
45
45
47
FC1
G
54
48
RV1
B
73
74
DCV2
63
53
49
51
52
P
T
OPEN
CLOSED
65
62

FIG. 17.

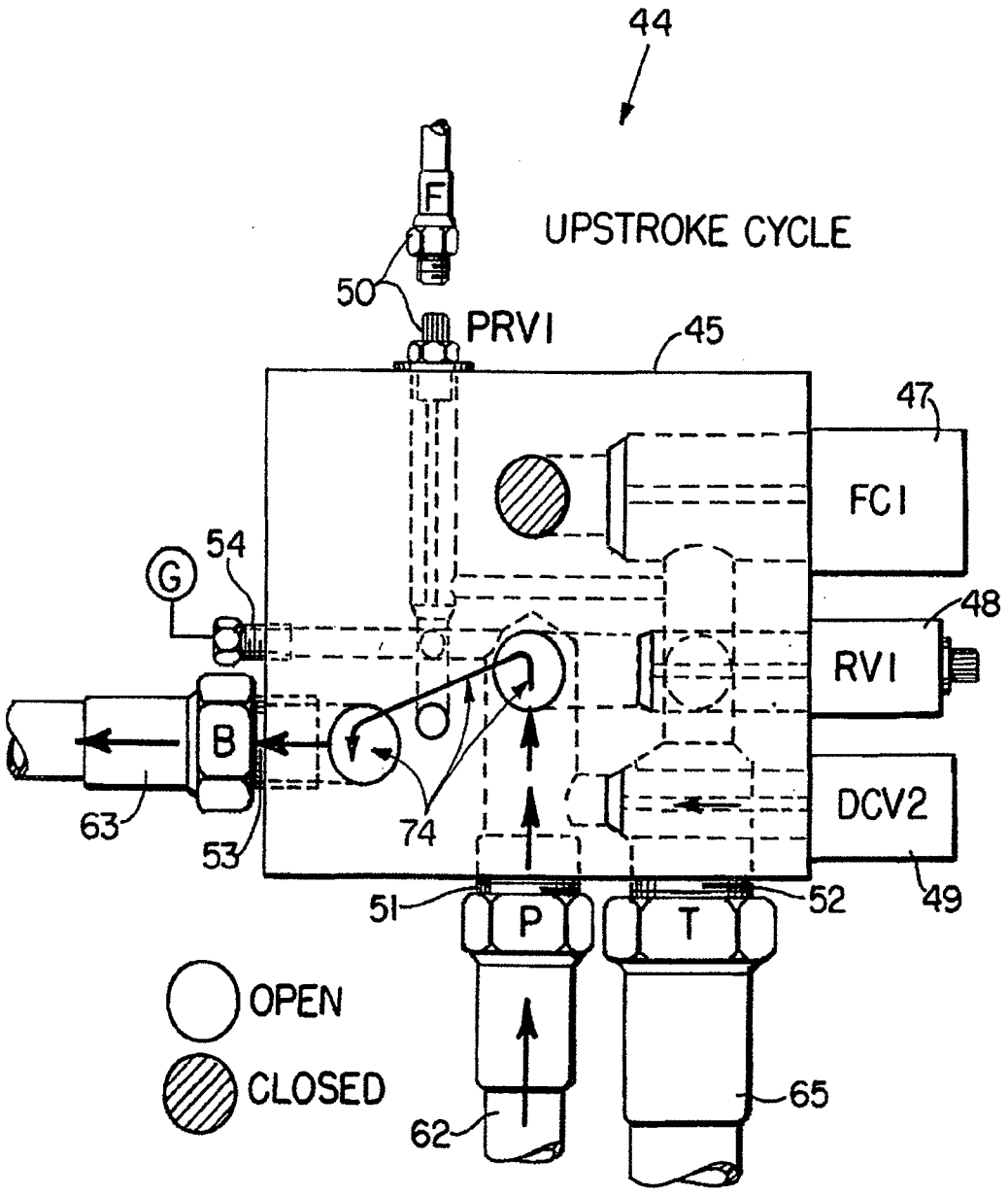
44
F
UPSTROKE CYCLE
50
PRV1
45
47
FC1
54
G
48
RV1
B
DCV2
63
53
74
49
51
52
P
T
OPEN
CLOSED
65
62

FIG. 18.

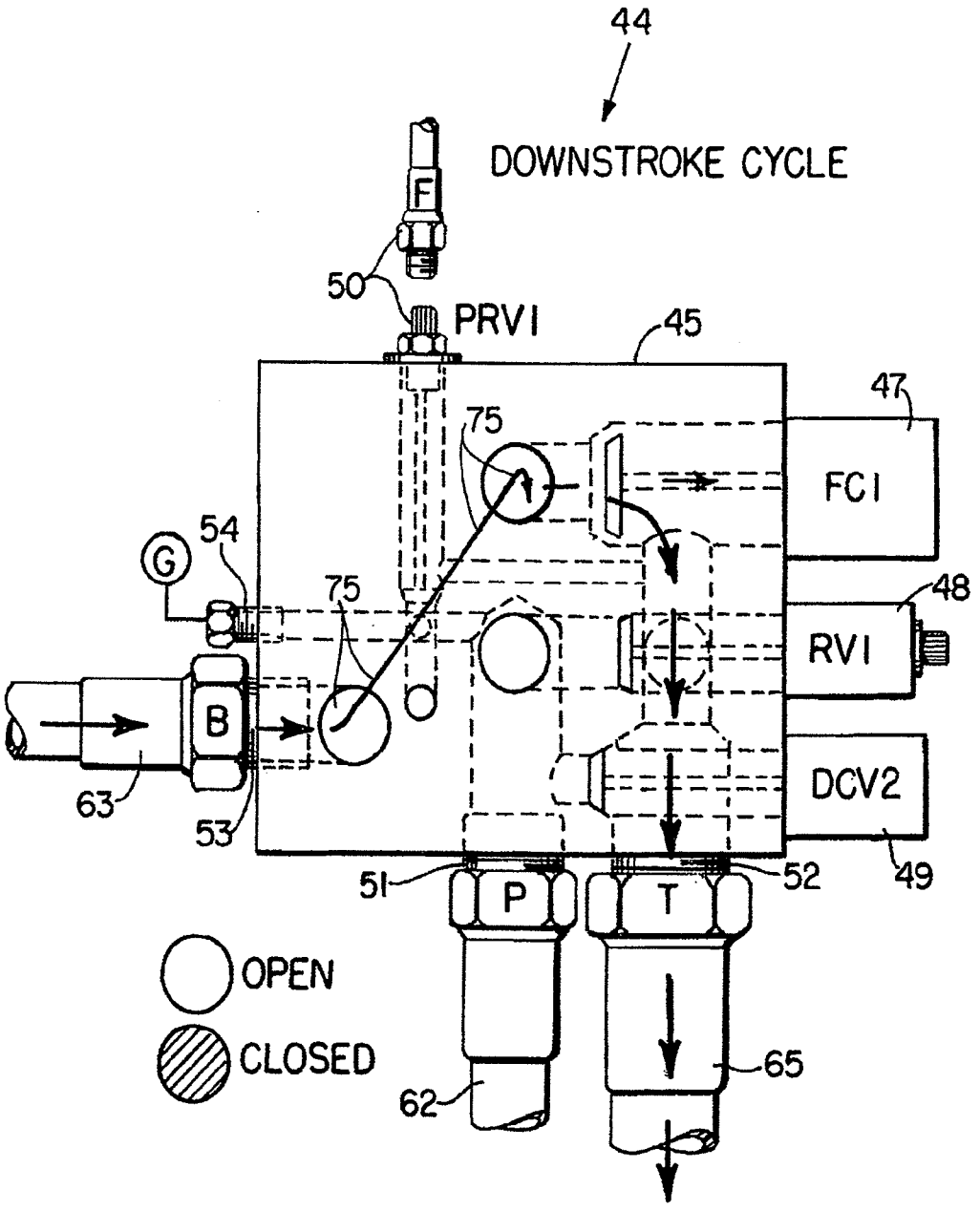
44
DOWNSTROKE CYCLE
F
50
PRV1
45
47
75
FC1
54
G
75
48
RV1
B
63
53
DCV2
49
51
P
T
52
OPEN
CLOSED
65
62

FIG. 19.

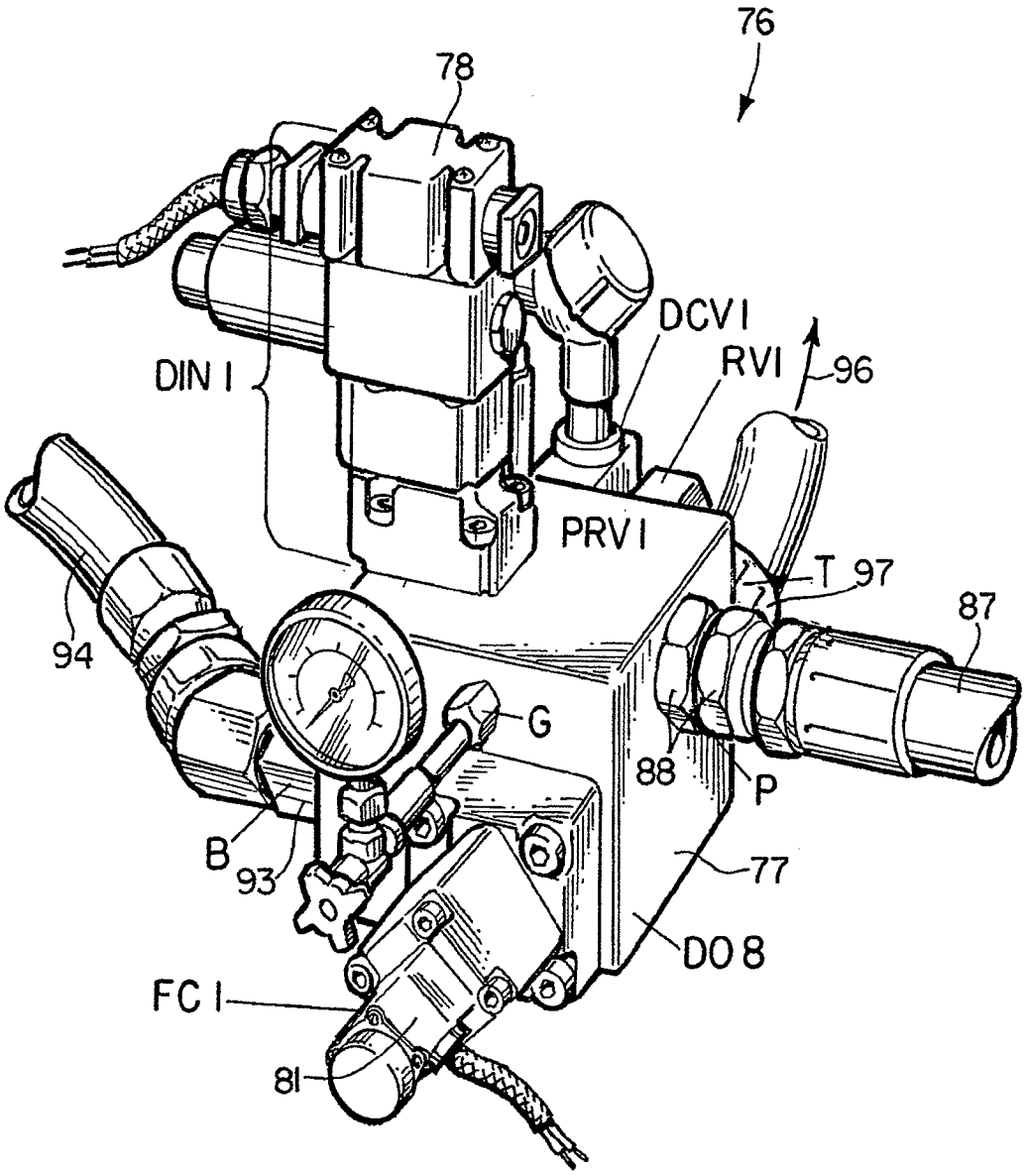

FIG. 20.

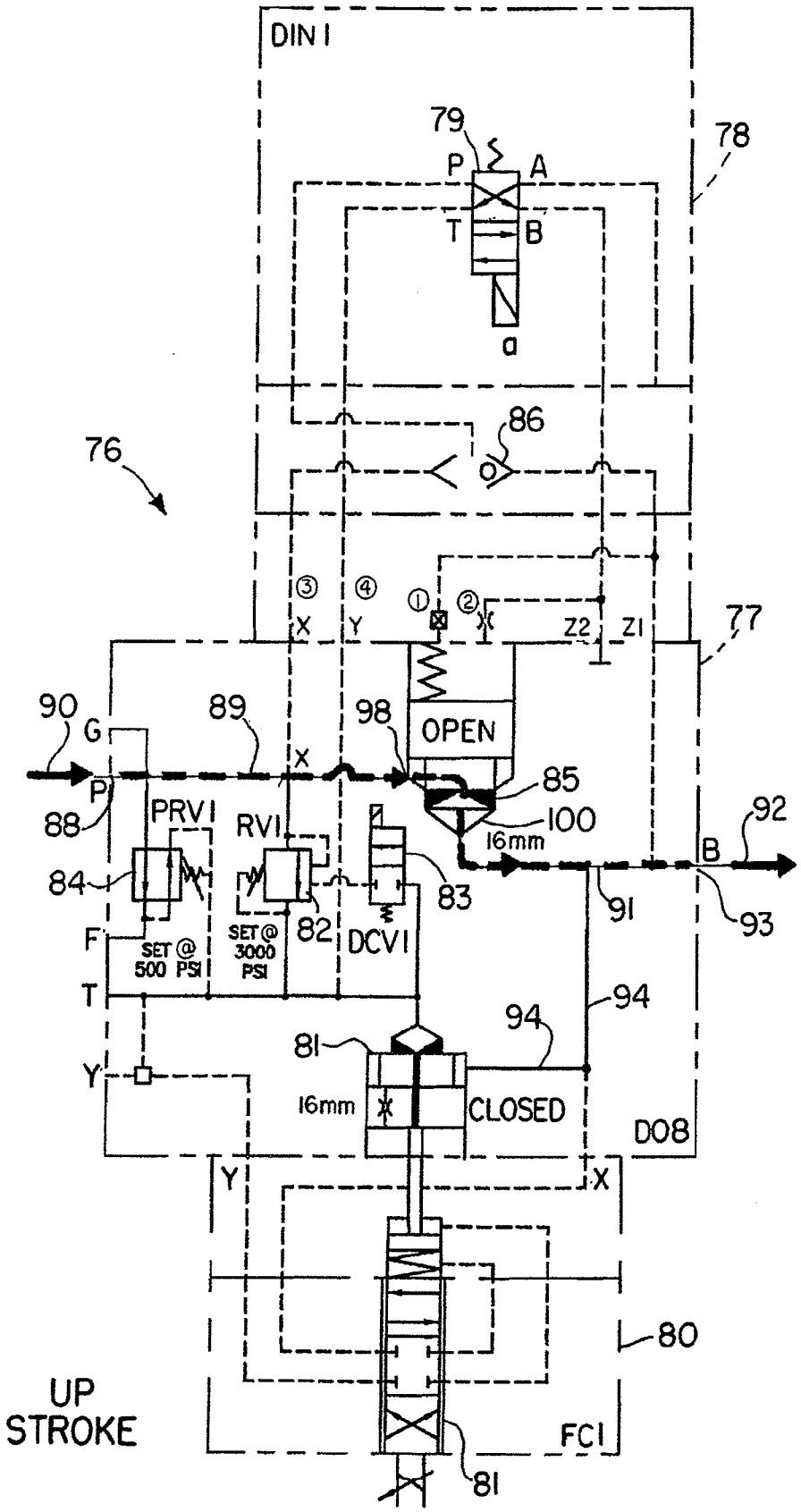
DIN I
79
P
A
T
B
a
78
86
76
③
④
①
②
X
Y
Z2
Z1
77
90
G
89
98
OPEN
X
85
P
88
PRV I
RV I
100
16mm
92
B
84
83
91
93
F
SET @ 500 PSI
SET @ 3000 PSI
82
DCV I
T
94
94
81
Y
16mm
CLOSED
DO8
Y
X
80
UP STROKE
FC I
81

FIG. 21.

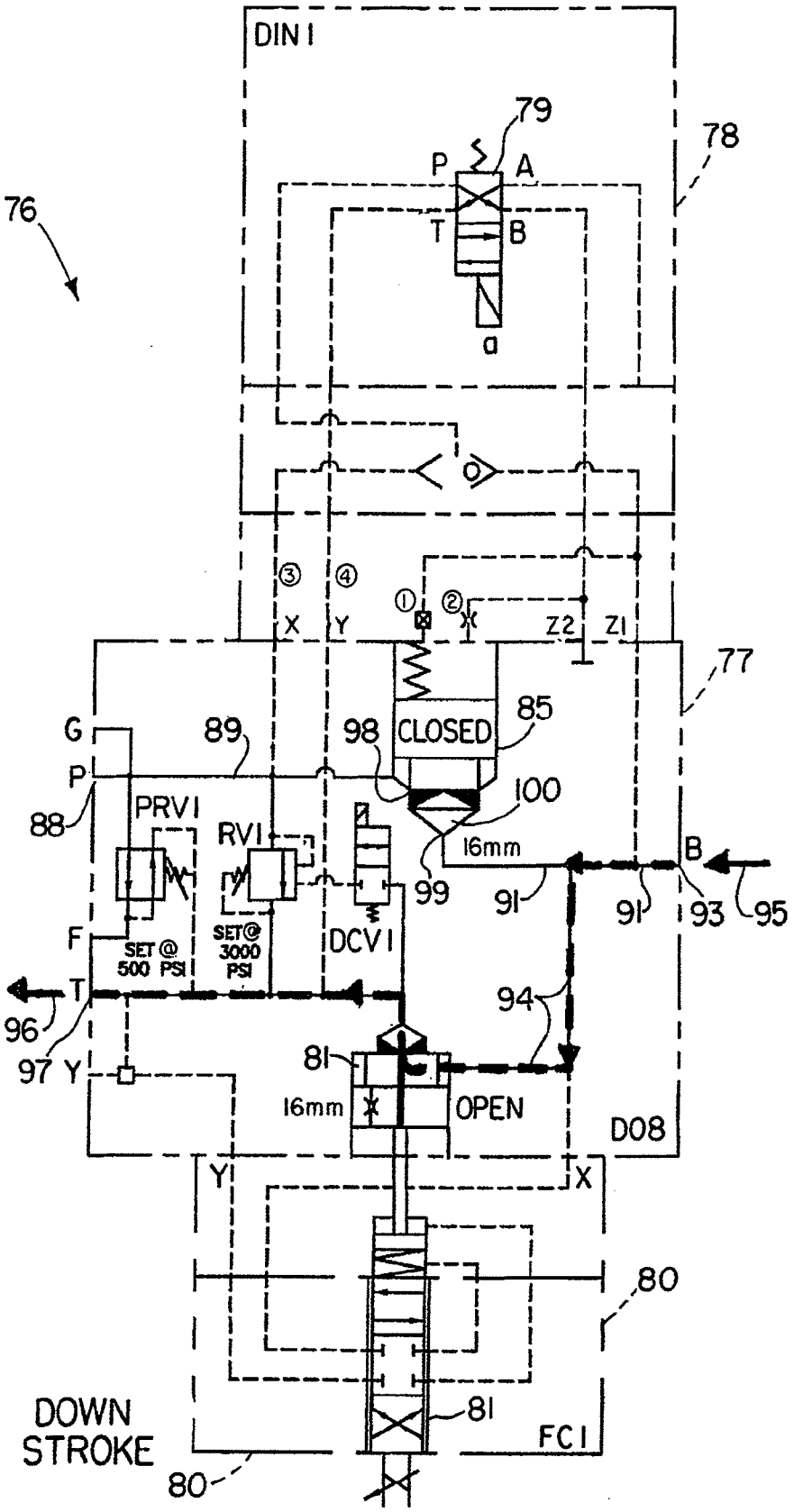
DIN I
79
78
P
A
T
B
a
76
③
④
①
②
X
Y
Z2
ZI
77
G
89
98
CLOSED
85
P
100
88
PRVI
RVI
16mm
B
99
91
91
93
95
F
SET @ 500 PSI
SET@ 3000 PSI
DCV I
T
94
96
97
Y
81
16mm
OPEN
D08
Y
X
80
DOWN STROKE
81
FC I
80

FIG. 22.

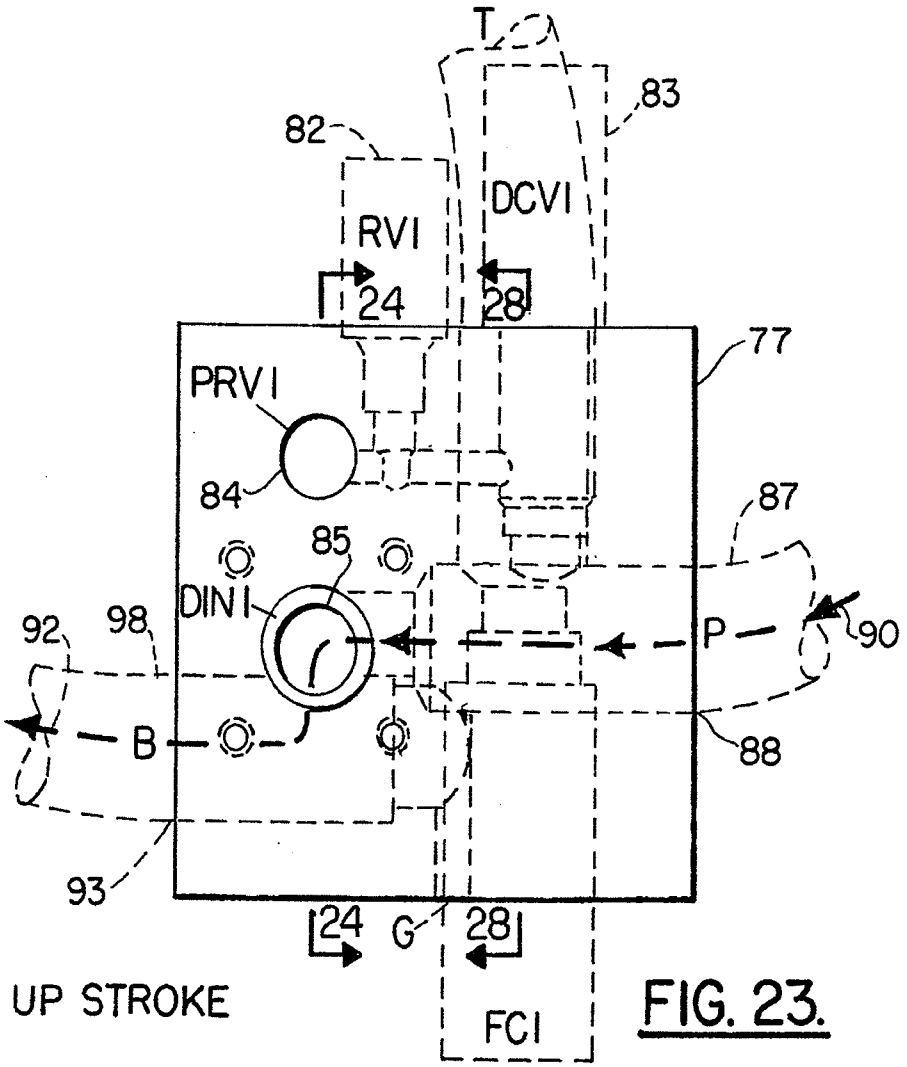
T
83
82
DCVI
RVI
24
28
77
PRVI
84
87
85
DIN I
92
98
P
90
B
88
93
24
G
28
UP STROKE
FCI

FIG. 23.

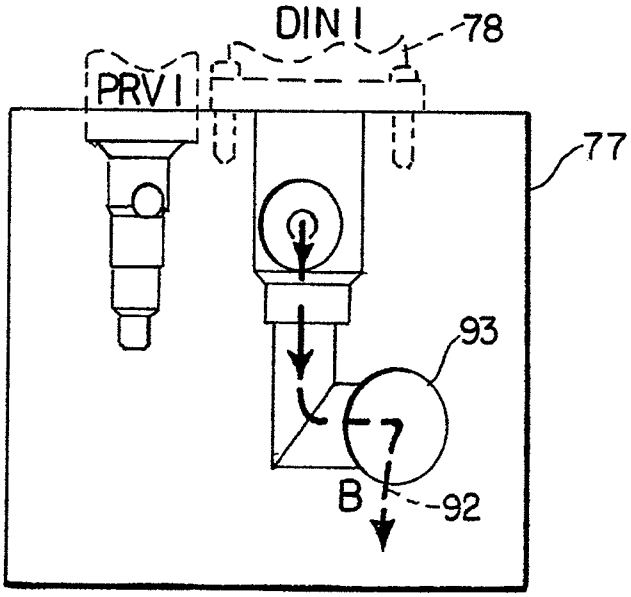
DIN I
78
PRVI
77
93
B
92

FIG. 24.

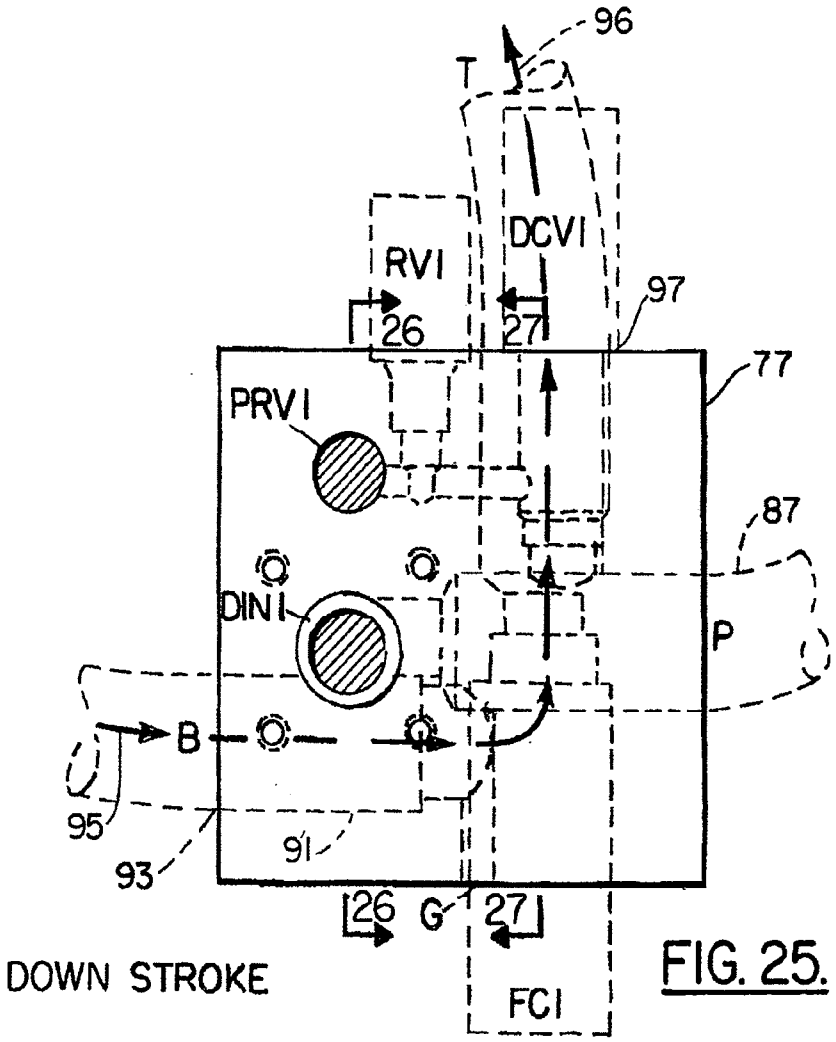
96
T
DCVI
RVI
97
26
27
77
PRVI
87
DIN I
P
B
95
91
93
26
G
27
FCI
DOWN STROKE

FIG. 25.

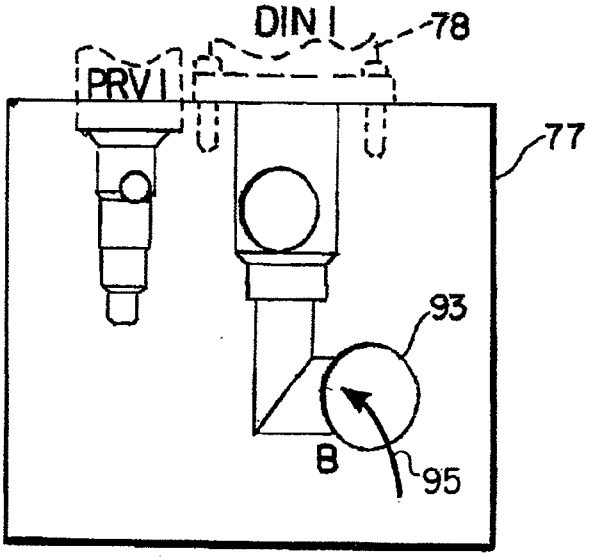
DIN I
78
PRVI
77
93
B
95

FIG. 26.

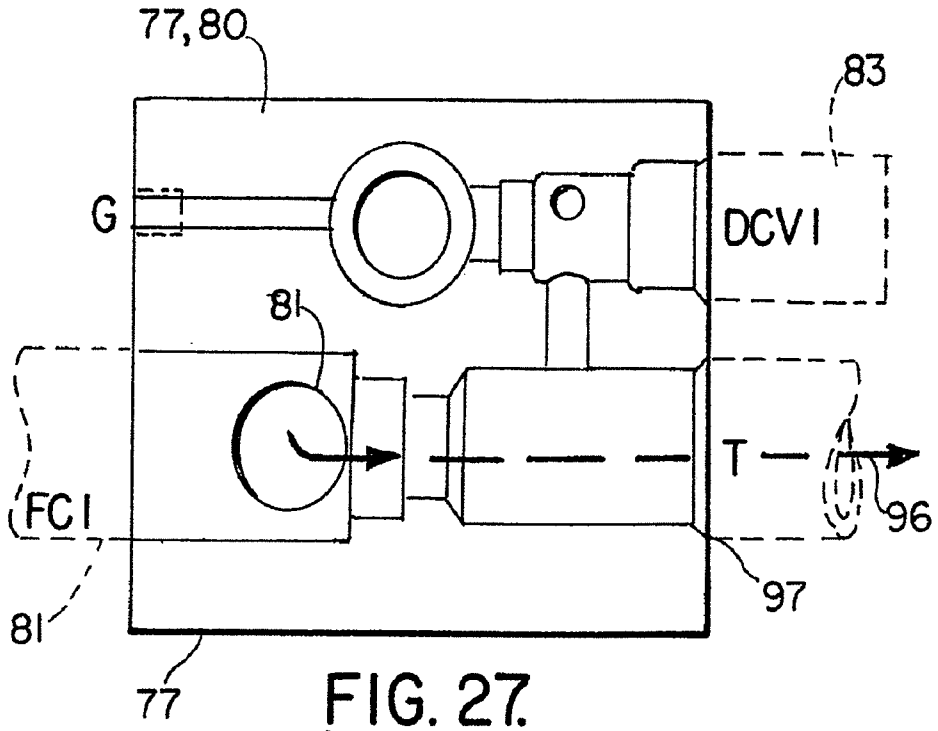

FIG. 27.

DOWN STROKE

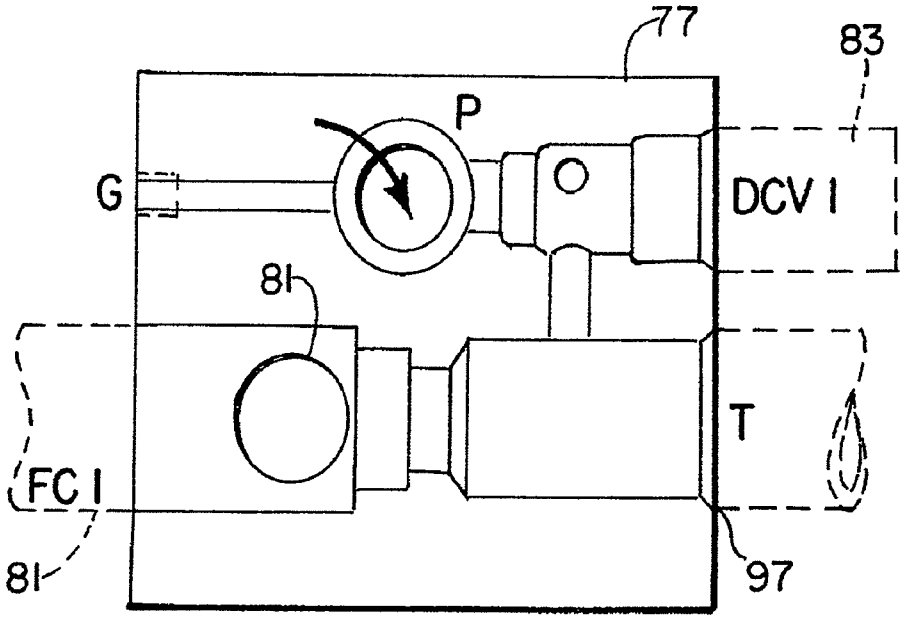

FIG. 28.

UP STROKE

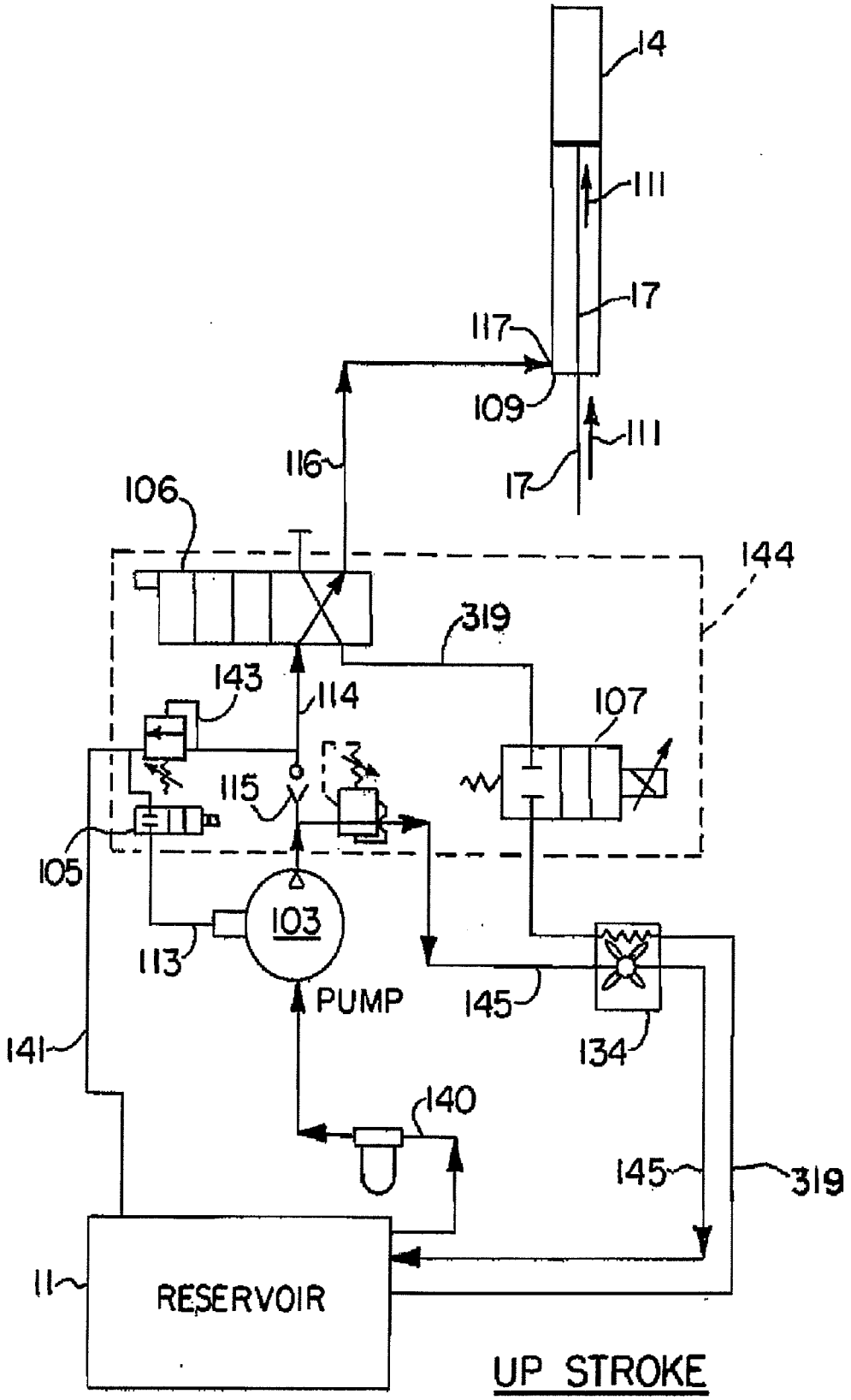
14
111
17
117
109
111
17
116
106
144
319
143
114
107
115
105
103
113
PUMP
145
134
141
140
145
319
11
RESERVOIR
UP STROKE

FIG. 29.

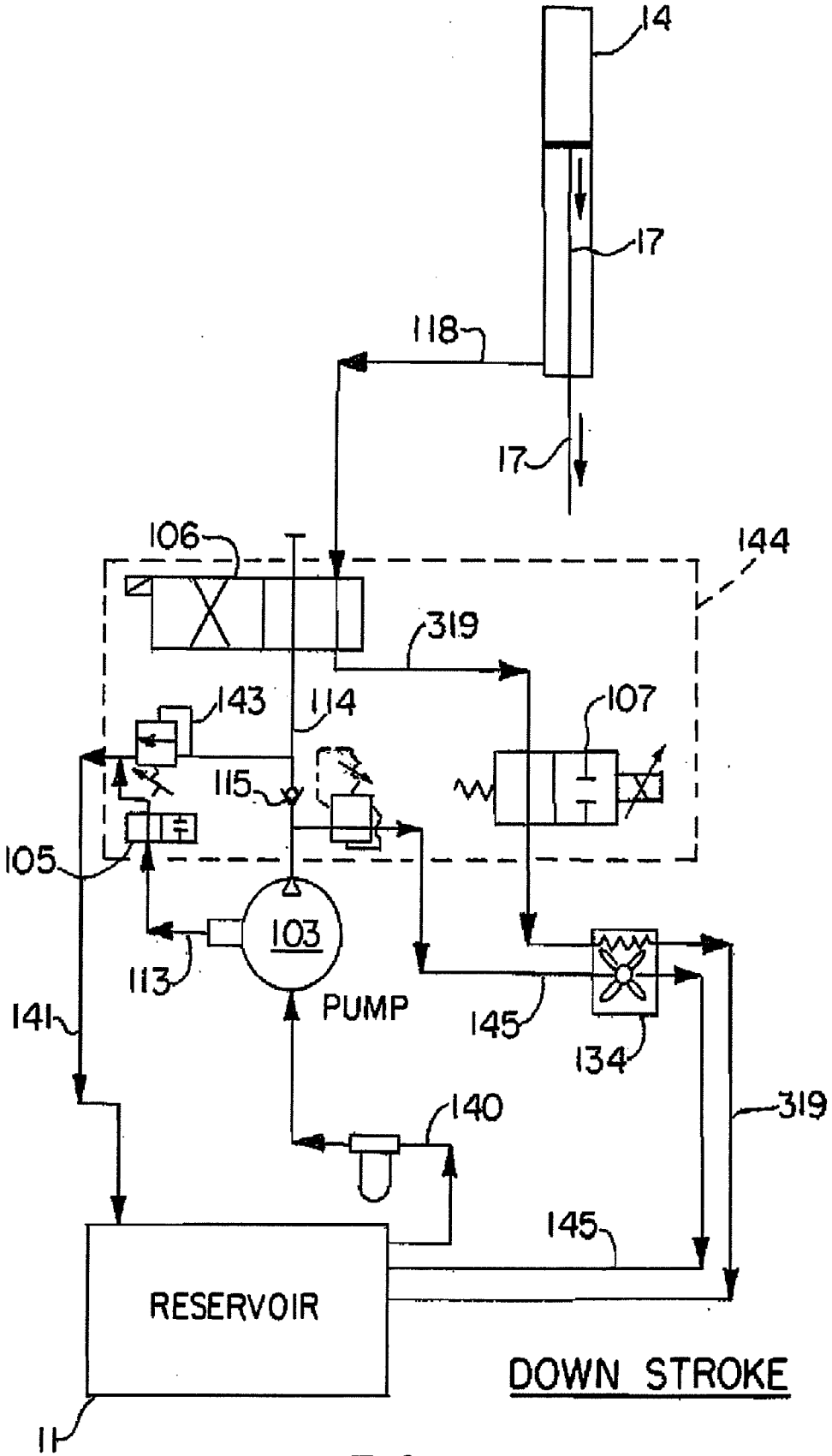
14
17
118
17
106
144
319
143
114
107
115
105
103
113
PUMP
141
145
134
319
140
145
RESERVOIR
DOWN STROKE
11

FIG. 30.

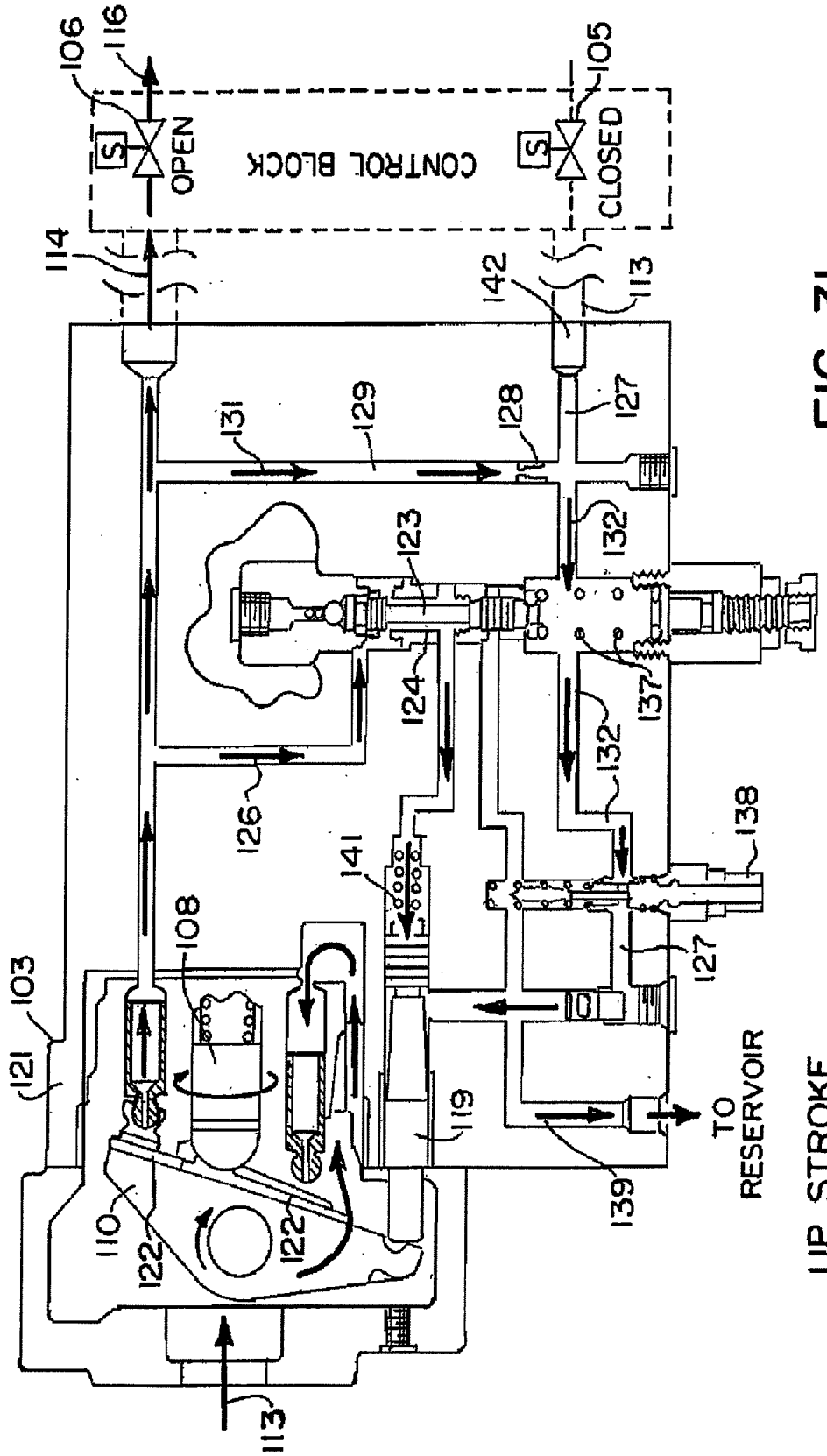
106
116
105
OPEN
CONTROL BLOCK
CLOSED
114
142
113
131
129
128
127
123
132
124
137
126
141
138
108
103
121
119
139
110
122
122
113
TO RESERVOIR
UP STROKE

FIG. 31.

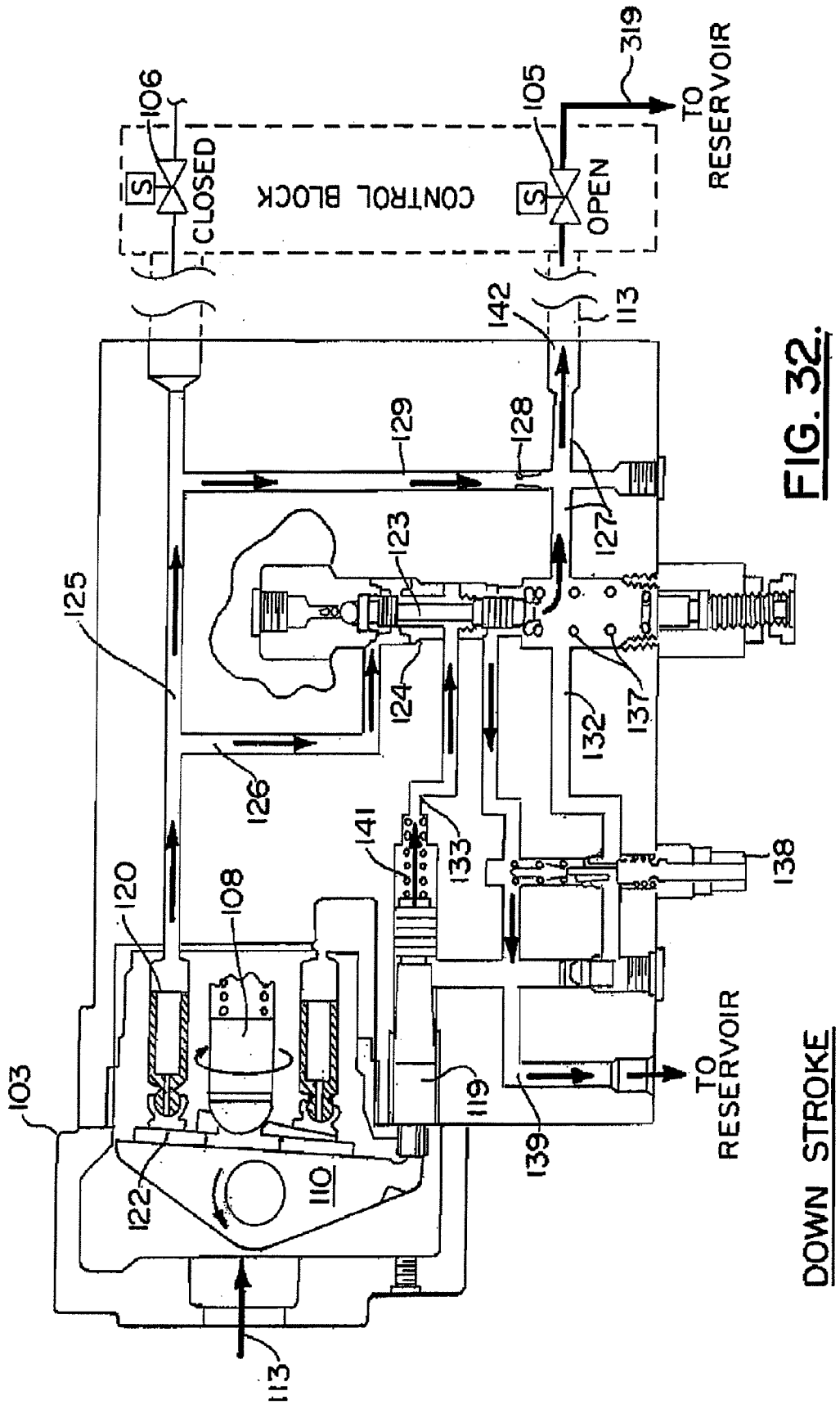
CONTROL BLOCK
106
CLOSED
105
OPEN
319
TO RESERVOIR
142
113
129
128
127
123
125
124
126
132
137
141
133
138
120
108
103
119
139
TO RESERVOIR
122
110
113
DOWN STROKE

FIG. 32.

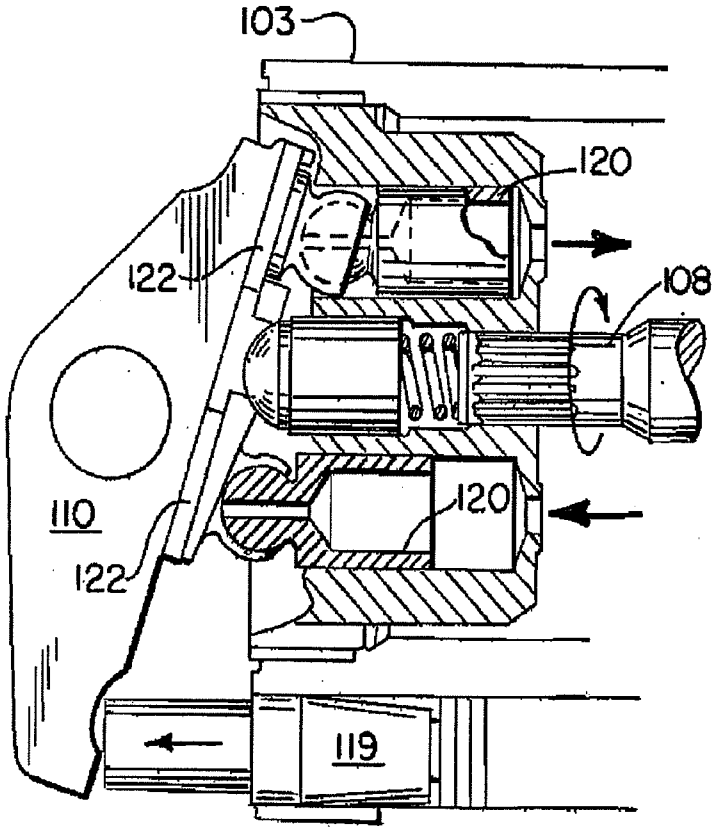
103
120
122
108
110
120
122
119

FIG. 33.

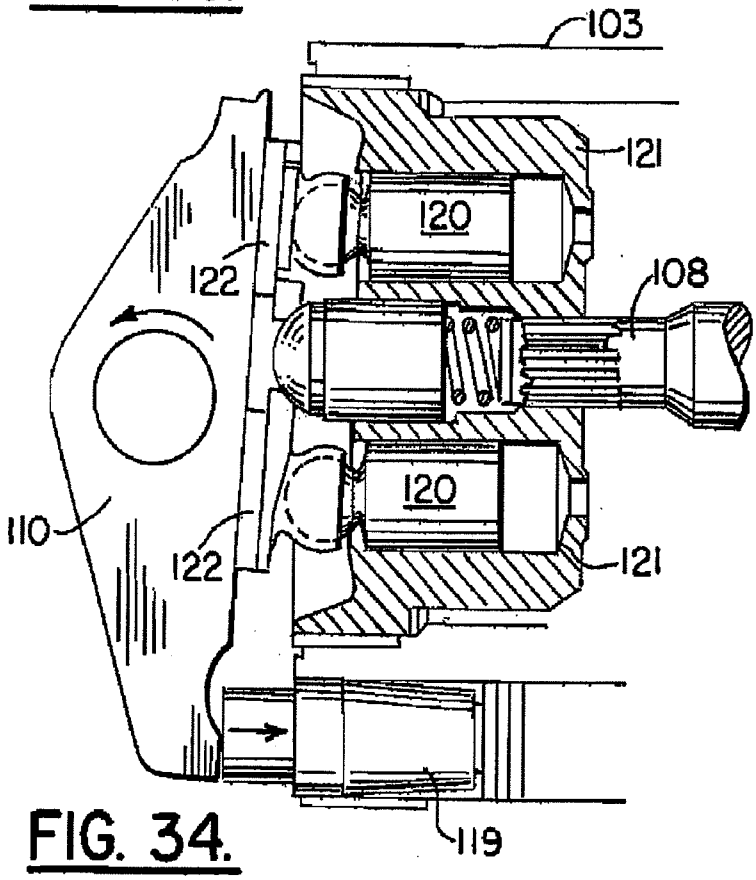
103
121
120
122
108
110
120
122
121
119

FIG. 34.

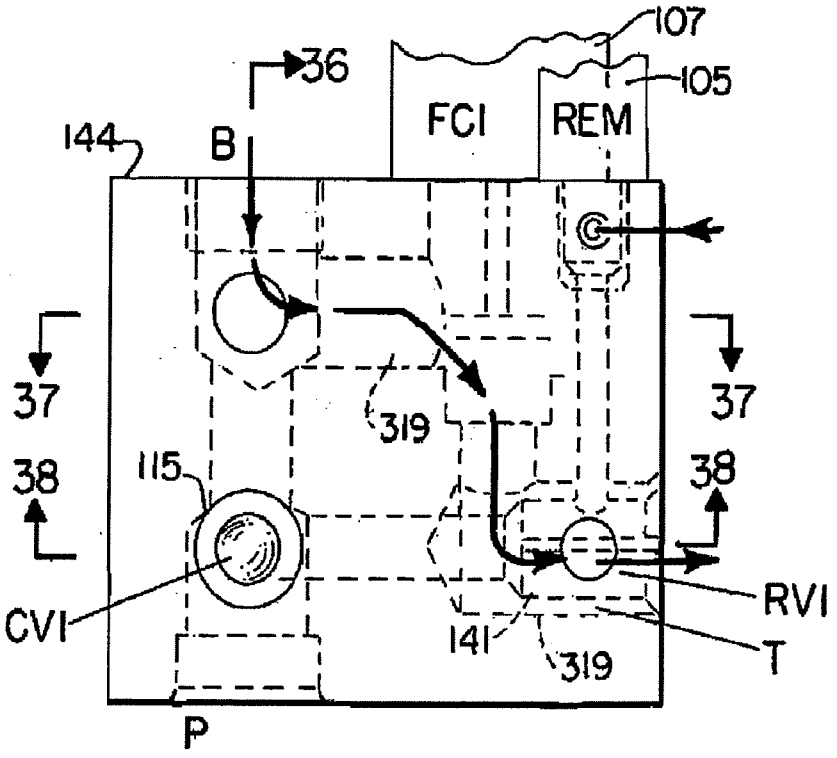

FIG. 35.

DOWN STROKE

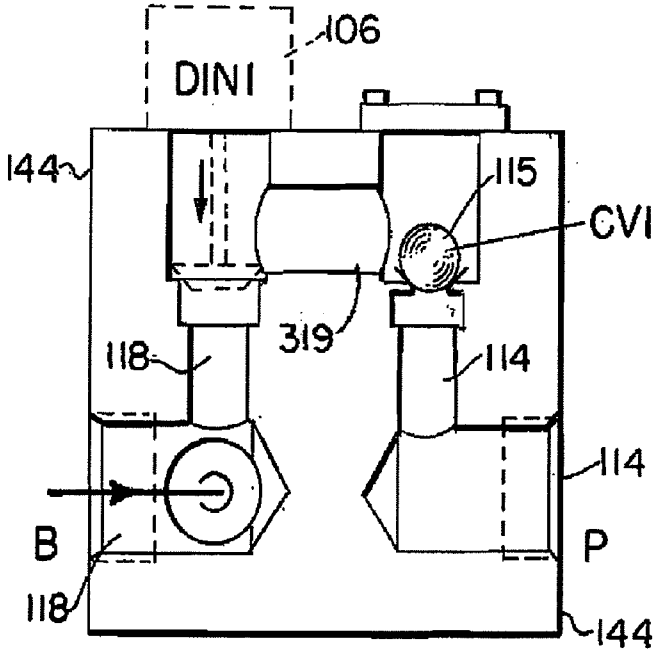

FIG. 36.

DOWN STROKE

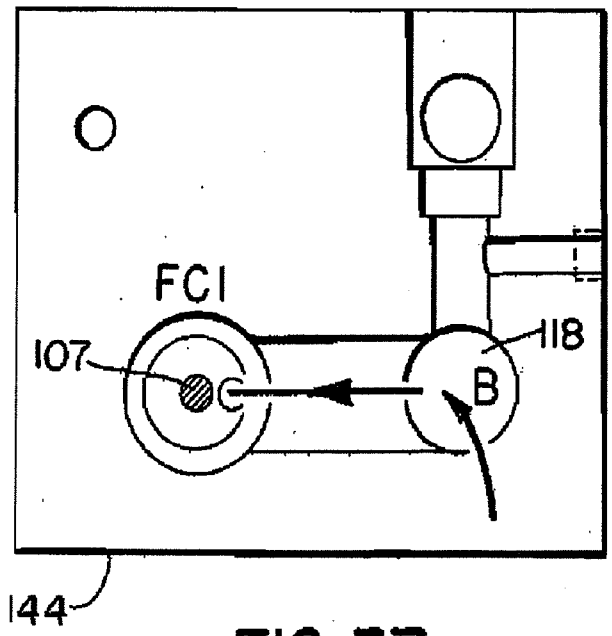

FIG. 37.
DOWN STROKE

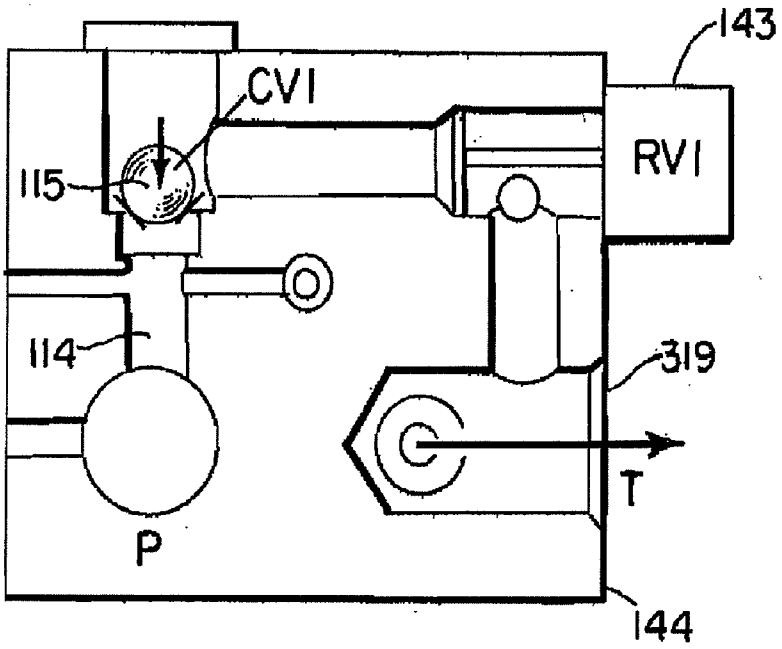

FIG. 38.
DOWN STROKE

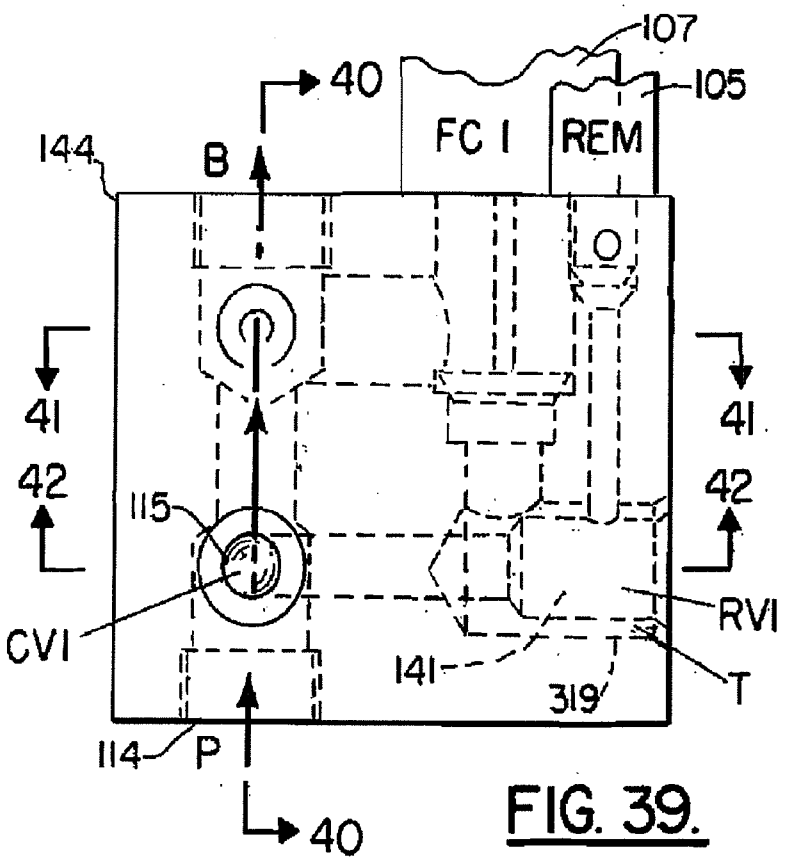

FIG. 39.
UP STROKE

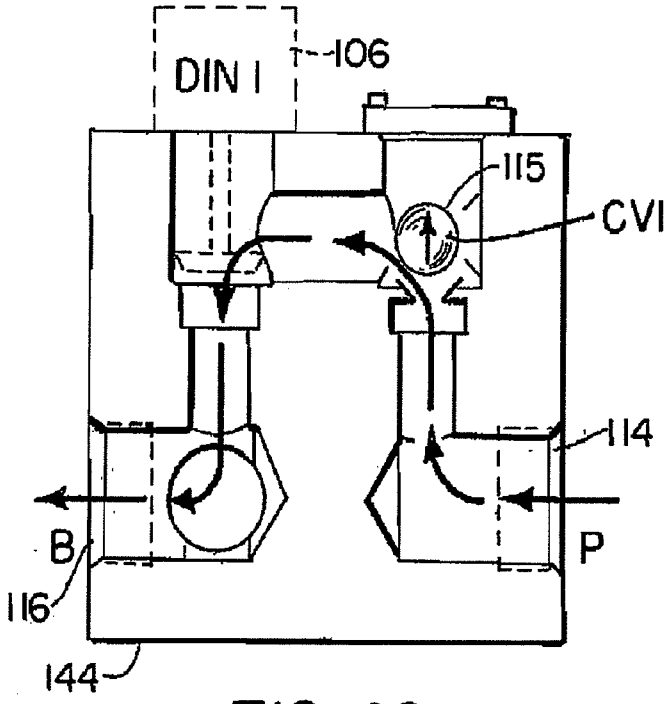

FIG. 40.
UP STROKE

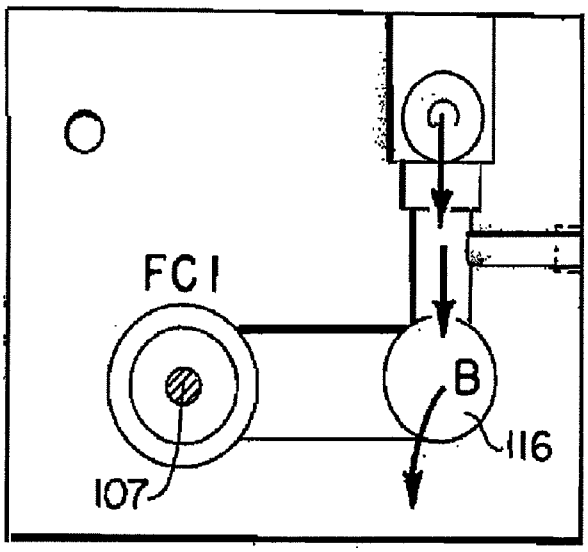

FIG. 41.
UP STROKE

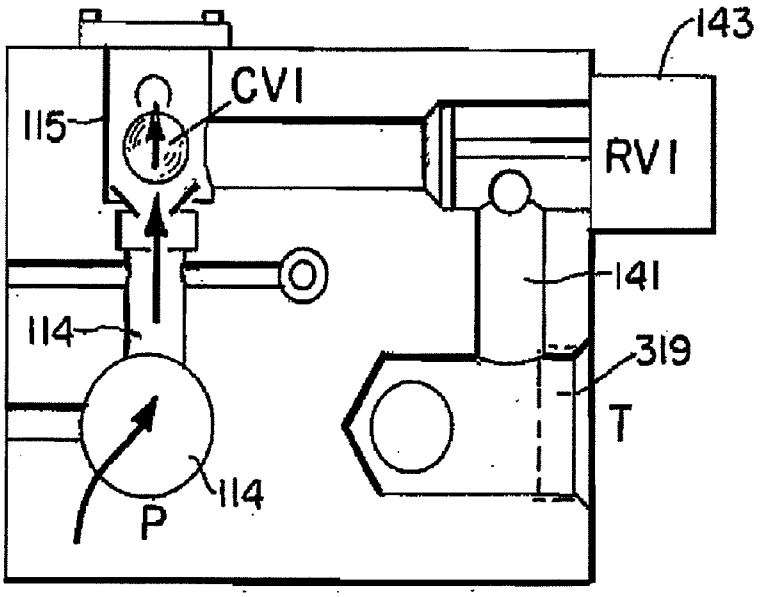

FIG. 42.
UP STROKE