PCT WORLD INTELLECTUAL PROPERTY ORGANIZATION
International Bureau

INTERNATIONAL APPLICATION PUBLISHED UNDER THE PATENT COOPERATION TREATY (PCT)

(51) International Patent Classification 7 :
B63B 21/66, G01V 1/38 // H02G 1/10

A1

(11) International Publication Number: **WO 00/41926**

(43) International Publication Date: 20 July 2000 (20.07.00)

(21) International Application Number: PCT/IB00/00033

(22) International Filing Date: 12 January 2000 (12.01.00)

(30) Priority Data:
9900567.0 13 January 1999 (13.01.99) GB

(71) Applicant *(for all designated States except CA FR US)*: GECO AS [NO/NO]; Schlumberger House, Solbraveien 23, N–1372 Asker (NO).

(71) Applicant *(for CA only)*: SCHLUMBERGER CANADA LIMITED [CA/CA]; 24th floor, Monenco Place, 801 6th Avenue, S.W., Calgary, Alberta T2P 3W2 (CA).

(71) Applicant *(for FR only)*: SERVICES PETROLIERS SCHLUMBERGER [FR/FR]; 42, rue Saint Dominique, F–75007 Paris (FR).

(72) Inventors; and
(75) Inventors/Applicants *(for US only)*: JOHNSEN, Baard [NO/NO]; Skolegata 27B, N–4790 Lillesand (NO). HOOYKAAS, Carel, Willem, Jan [NL/NO]; 2227 Silver Sage, Houston, TX 77077 (US).

(74) Agent: STOOLE, Brian, David; Geco–Prakla (UK) Limited, Schlumberger House, Buckingham Gate, Gatwick, West Sussex RH6 0NZ (GB).

(81) Designated States: AE, AL, AM, AT, AU, AZ, BA, BB, BG, BR, BY, CA, CH, CN, CR, CU, CZ, DE, DK, DM, EE, ES, FI, GB, GD, GE, GH, GM, HR, HU, ID, IL, IN, IS, JP, KE, KG, KP, KR, KZ, LC, LK, LR, LS, LT, LU, LV, MA, MD, MG, MK, MN, MW, MX, NO, NZ, PL, PT, RO, RU, SD, SE, SG, SI, SK, SL, TJ, TM, TR, TT, TZ, UA, UG, US, UZ, VN, YU, ZA, ZW, ARIPO patent (GH, GM, KE, LS, MW, SD, SL, SZ, TZ, UG, ZW), Eurasian patent (AM, AZ, BY, KG, KZ, MD, RU, TJ, TM), European patent (AT, BE, CH, CY, DE, DK, ES, FI, FR, GB, GR, IE, IT, LU, MC, NL, PT, SE), OAPI patent (BF, BJ, CF, CG, CI, CM, GA, GN, GW, ML, MR, NE, SN, TD, TG).

Published
With international search report.

(54) Title: STREAMER HANDLING APPARATUS FOR USE ON SEISMIC SURVEY VESSELS

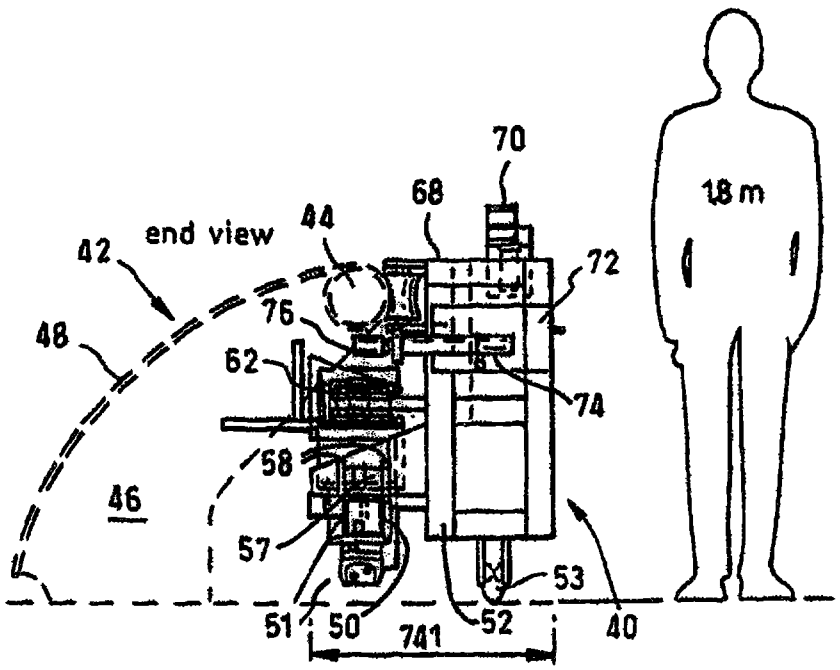

(57) Abstract

Streamer handling apparatus for use on a seismic survey vessel (10) comprises one or more trolleys (40) movable along a guide rail (50) over the width of stern (18) and of the streamer deck (20) of the vessel. The or each trolley (40) is provided with a clamping device (70) which can be used to grip the inboard end of part of a multi-section streamer (28) deployed over the stern end of the streamer deck (20), so facilitating the transfer of parts of streamers from one streamer (28) station to another across the width of the streamer deck (20).