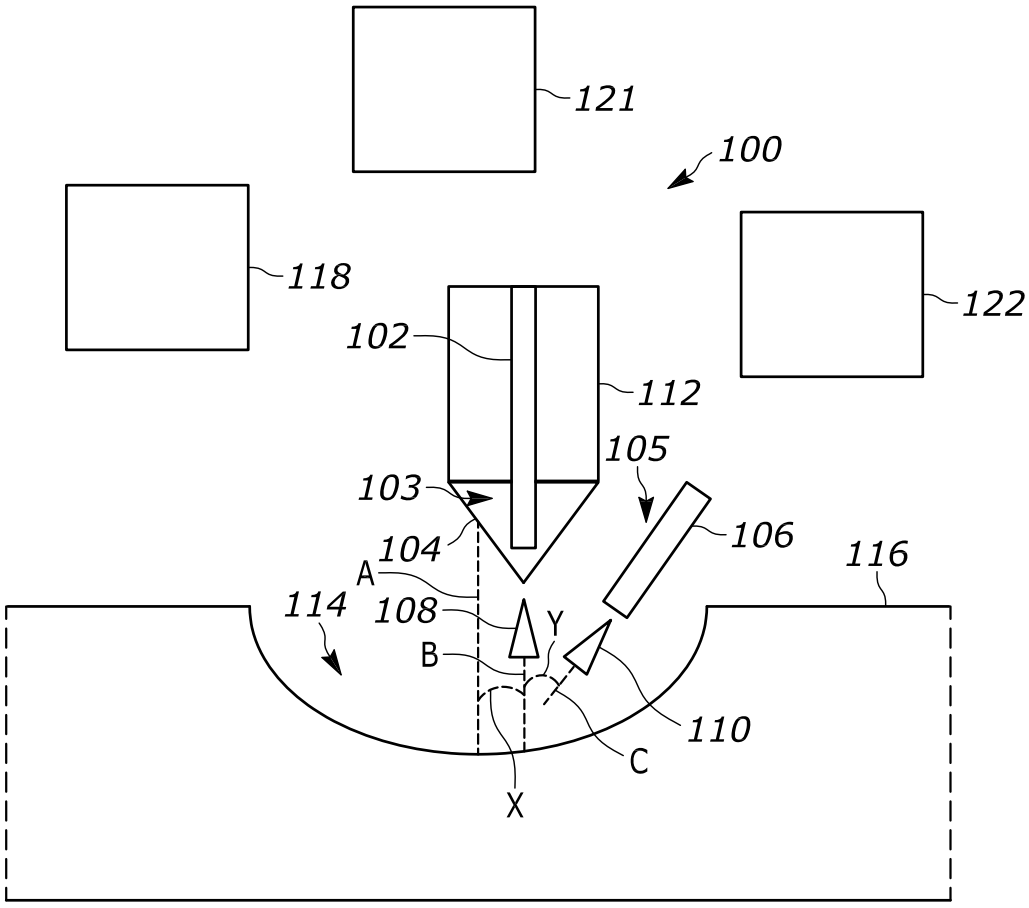

FIG. 1

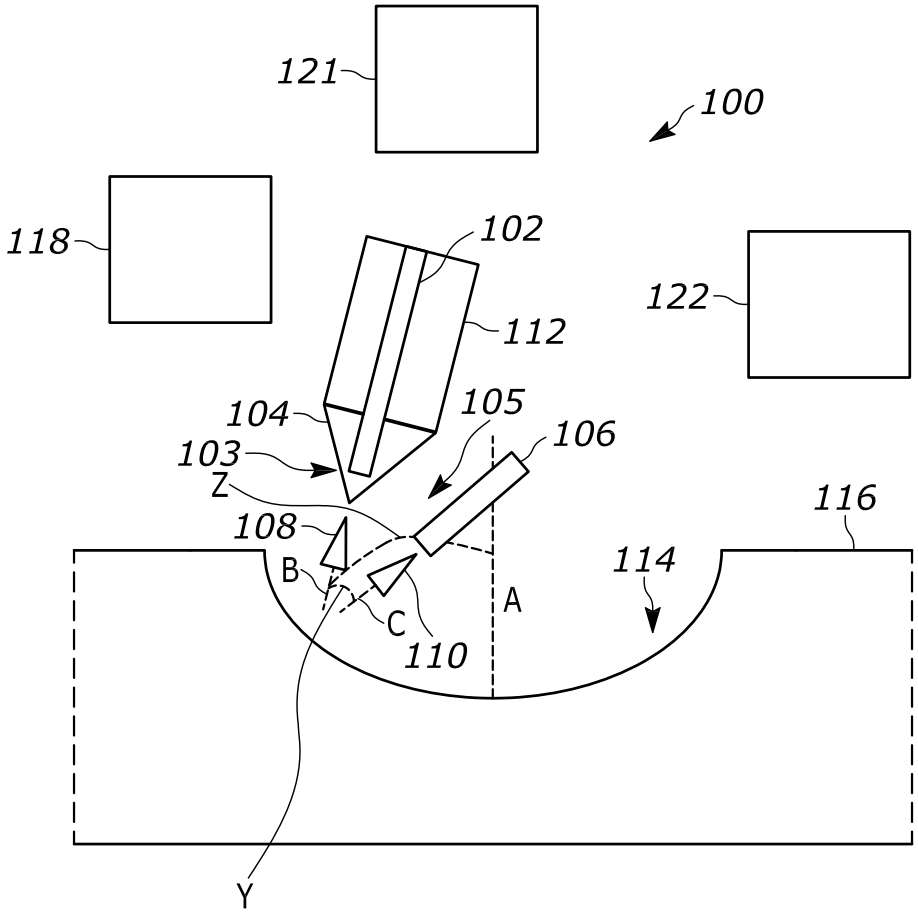

FIG. 2

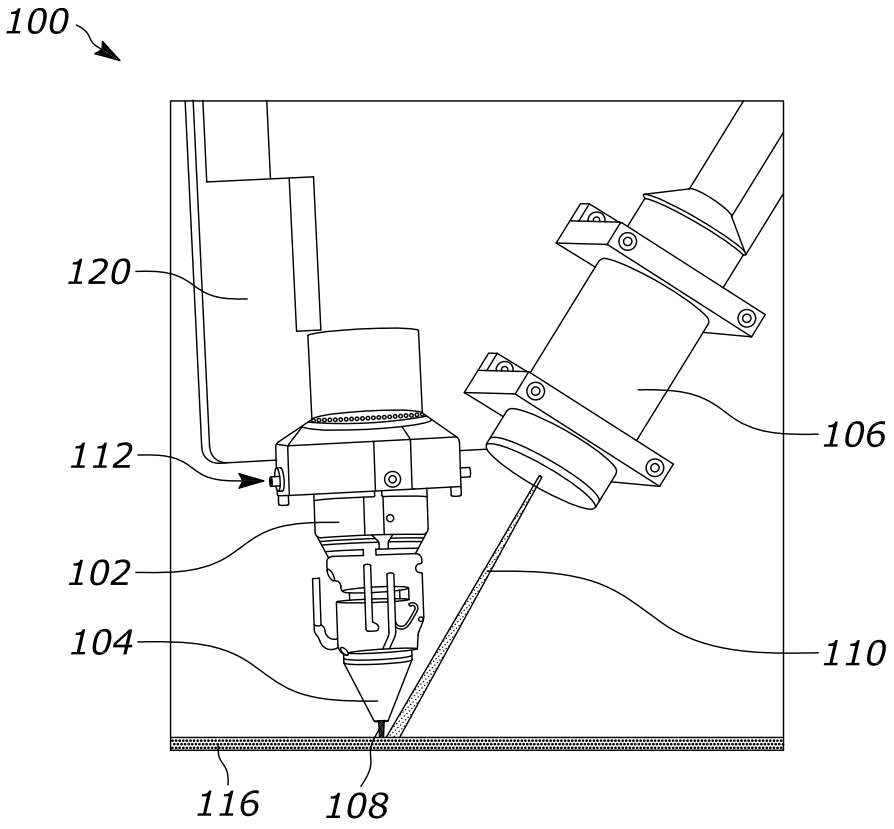

FIG. 3

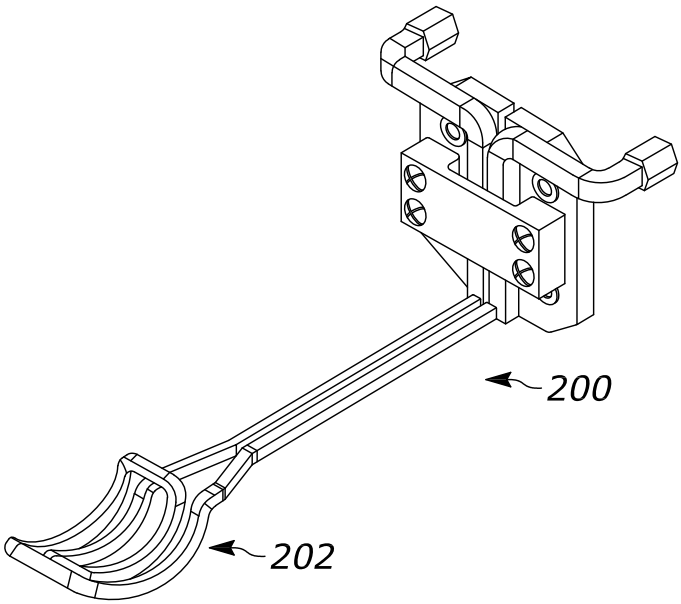

FIG. 4

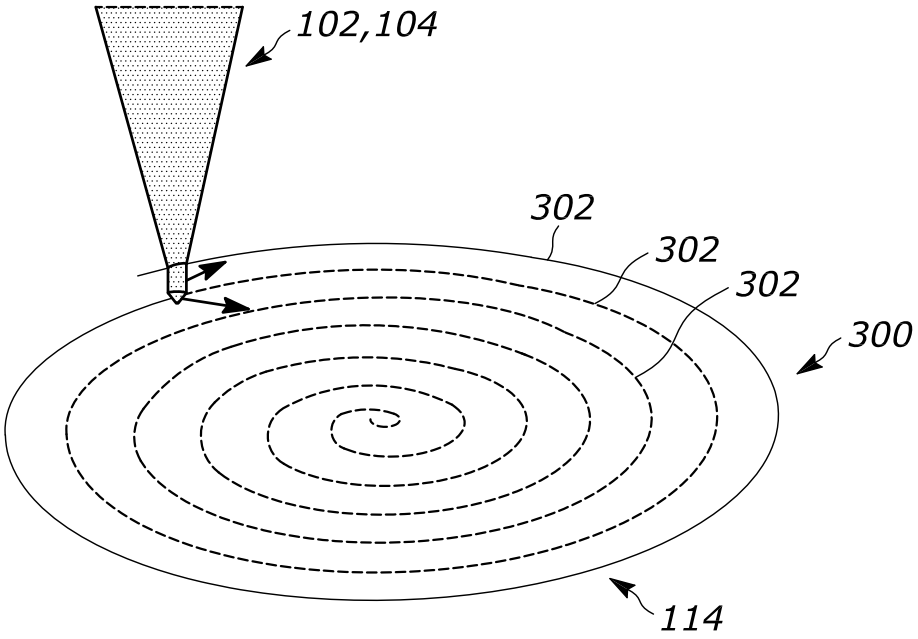

FIG. 5

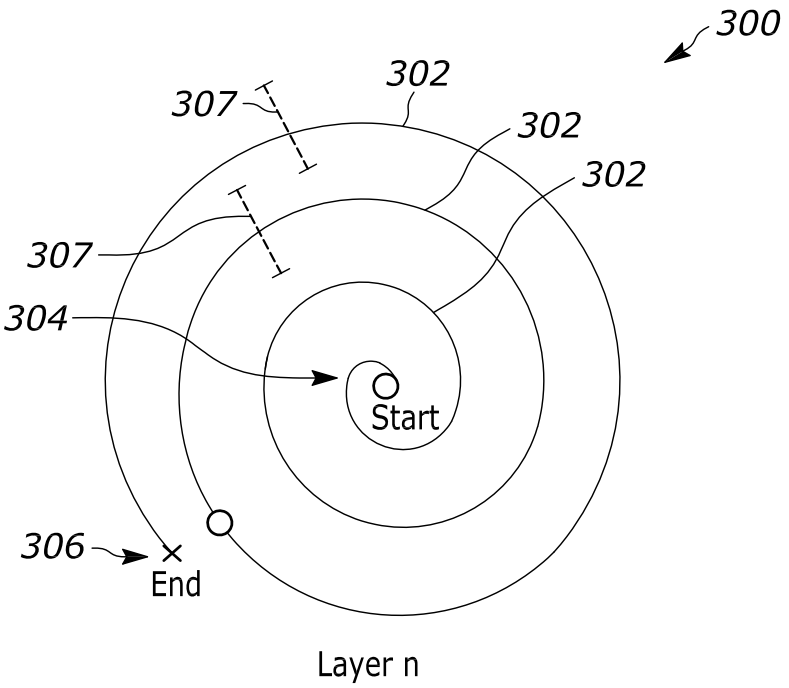
300
302
307
302
302
307
304
Start
306
End
Layer n

FIG. 6

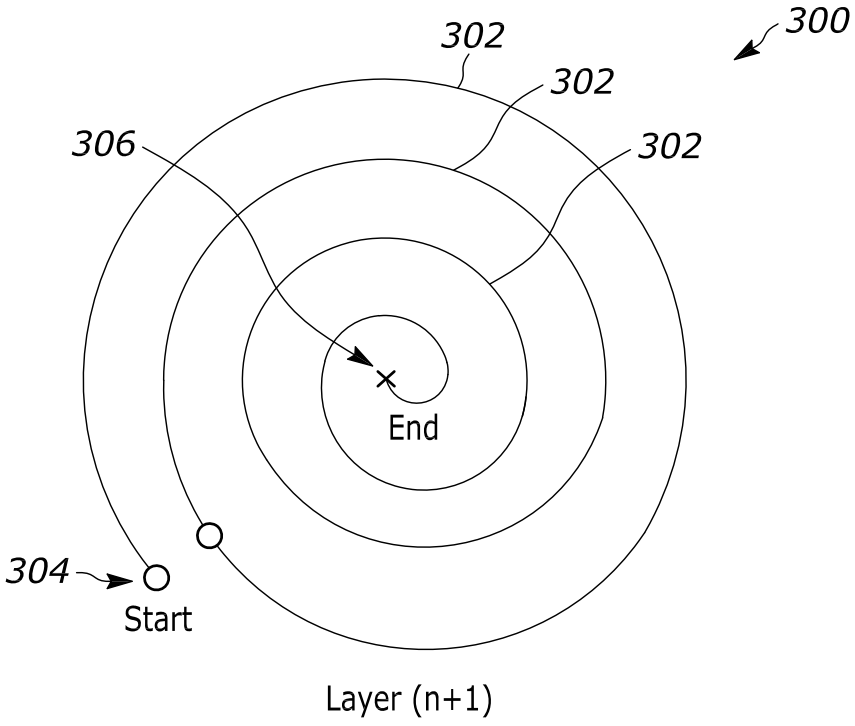
300
302
302
306
302
End
304
Start
Layer (n+1)

FIG. 7

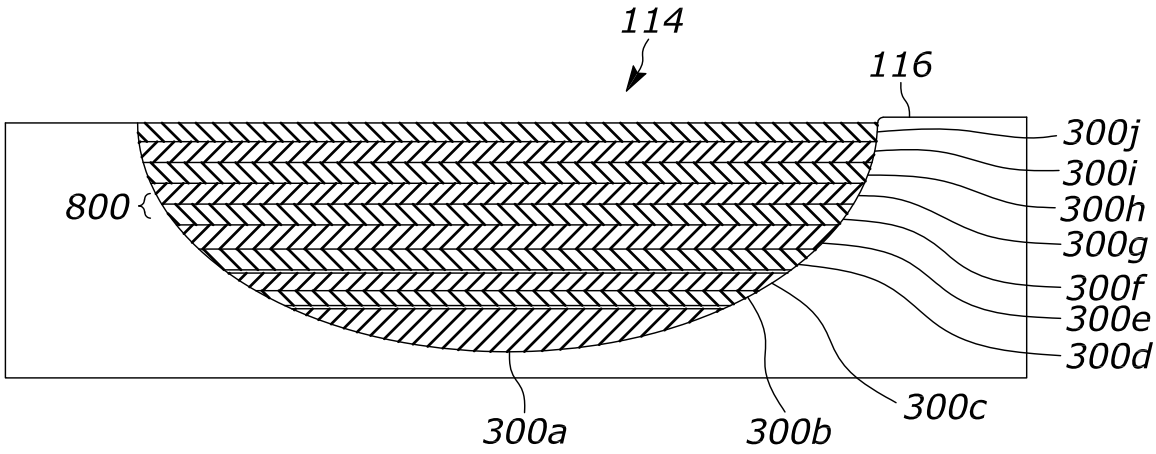
114
116
800
300j
300i
300h
300g
300f
300e
300d
300a
300b
300c

FIG. 8

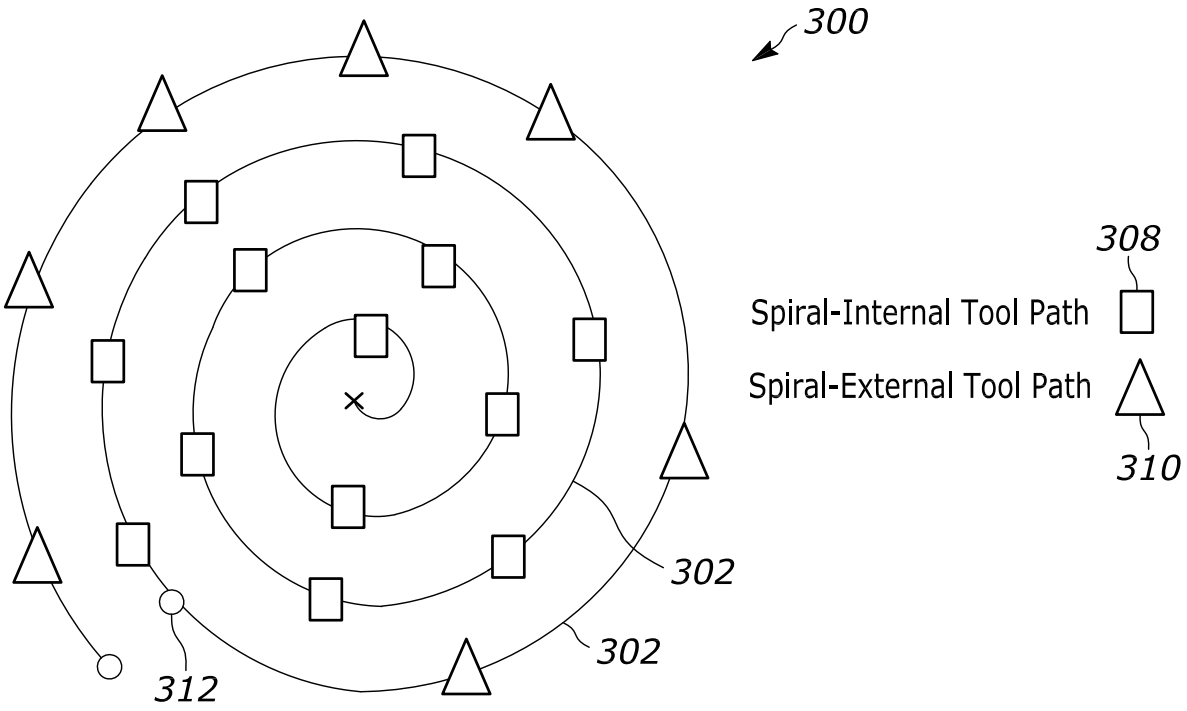
300
308
Spiral-Internal Tool Path
Spiral-External Tool Path
310
302
302
312

FIG. 9

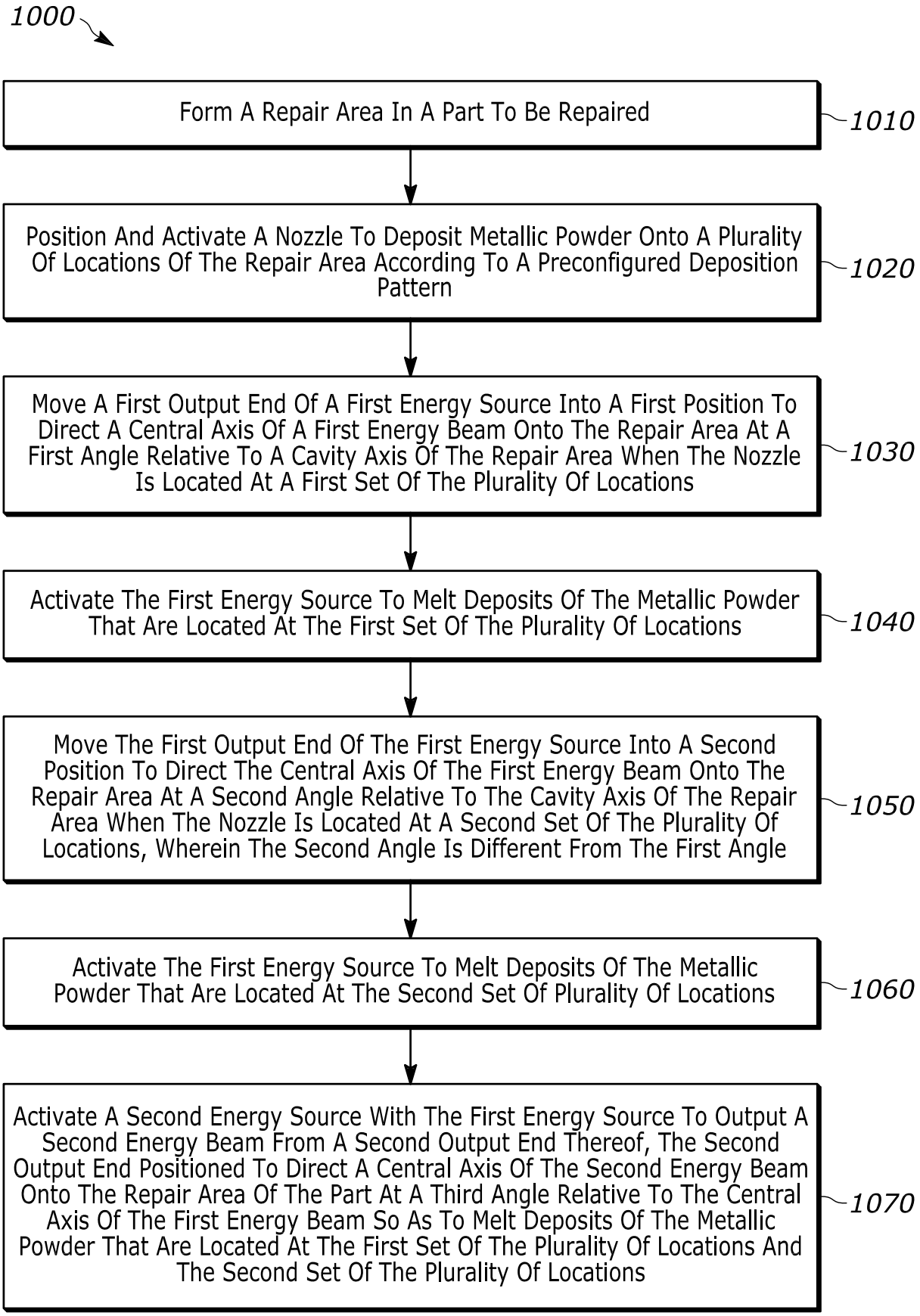
1000
Form A Repair Area In A Part To Be Repaired
1010
Position And Activate A Nozzle To Deposit Metallic Powder Onto A Plurality Of Locations Of The Repair Area According To A Preconfigured Deposition Pattern
1020
Move A First Output End Of A First Energy Source Into A First Position To Direct A Central Axis Of A First Energy Beam Onto The Repair Area At A First Angle Relative To A Cavity Axis Of The Repair Area When The Nozzle Is Located At A First Set Of The Plurality Of Locations
1030
Activate The First Energy Source To Melt Deposits Of The Metallic Powder That Are Located At The First Set Of The Plurality Of Locations
1040
Move The First Output End Of The First Energy Source Into A Second Position To Direct The Central Axis Of The First Energy Beam Onto The Repair Area At A Second Angle Relative To The Cavity Axis Of The Repair Area When The Nozzle Is Located At A Second Set Of The Plurality Of Locations, Wherein The Second Angle Is Different From The First Angle
1050
Activate The First Energy Source To Melt Deposits Of The Metallic Powder That Are Located At The Second Set Of Plurality Of Locations
1060
Activate A Second Energy Source With The First Energy Source To Output A Second Energy Beam From A Second Output End Thereof, The Second Output End Positioned To Direct A Central Axis Of The Second Energy Beam Onto The Repair Area Of The Part At A Third Angle Relative To The Central Axis Of The First Energy Beam So As To Melt Deposits Of The Metallic Powder That Are Located At The First Set Of The Plurality Of Locations And The Second Set Of The Plurality Of Locations
1070

FIG. 10