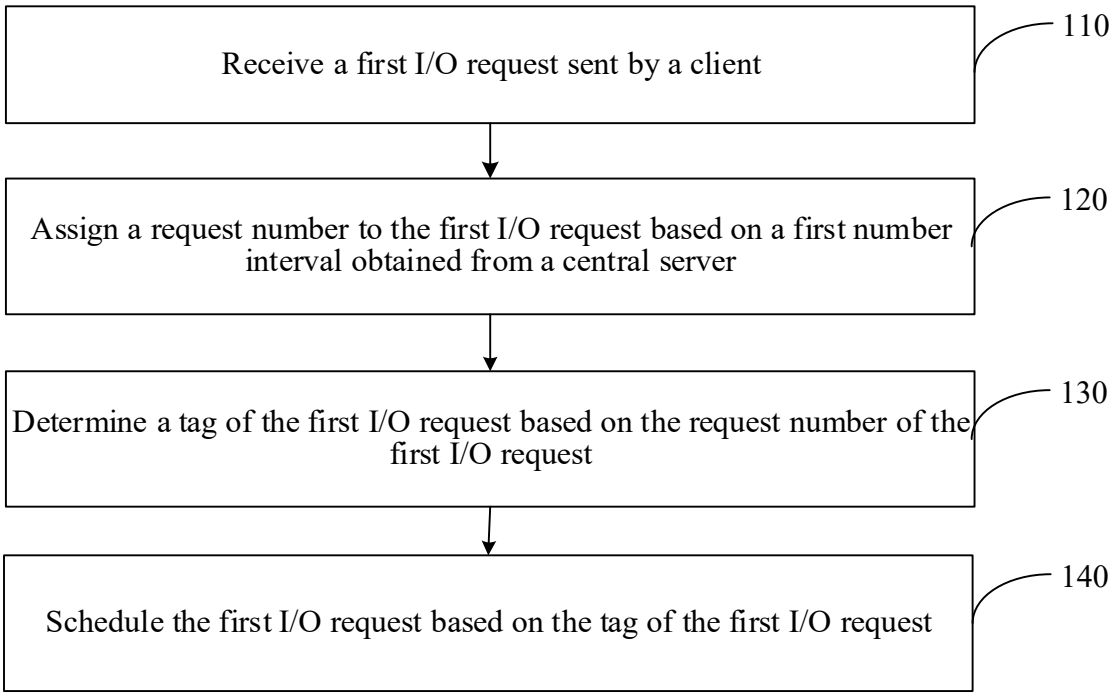
Receive a first I/O request sent by a client
110
Assign a request number to the first I/O request based on a first number interval obtained from a central server
120
Determine a tag of the first I/O request based on the request number of the first I/O request
130
Schedule the first I/O request based on the tag of the first I/O request
140

FIG. 1

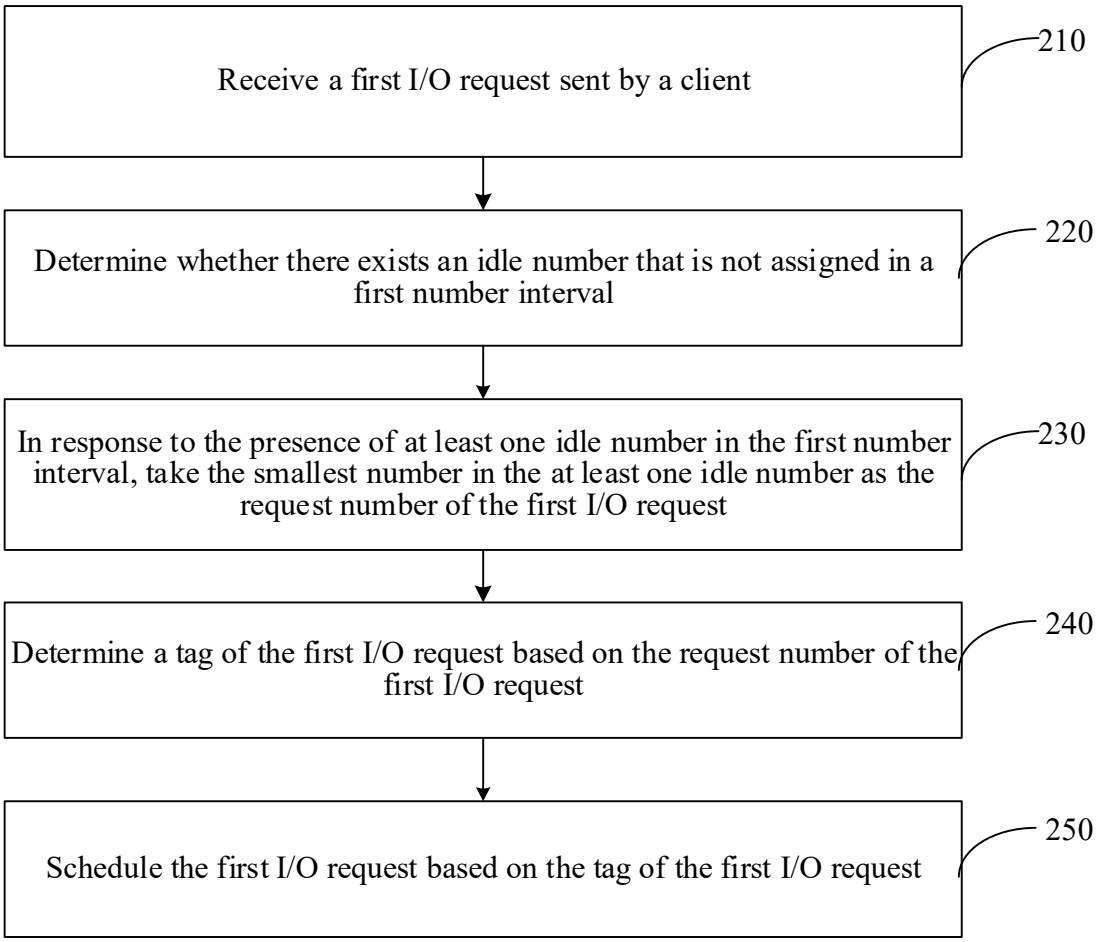
Receive a first I/O request sent by a client
210
Determine whether there exists an idle number that is not assigned in a first number interval
220
In response to the presence of at least one idle number in the first number interval, take the smallest number in the at least one idle number as the request number of the first I/O request
230
Determine a tag of the first I/O request based on the request number of the first I/O request
240
Schedule the first I/O request based on the tag of the first I/O request
250

FIG. 2

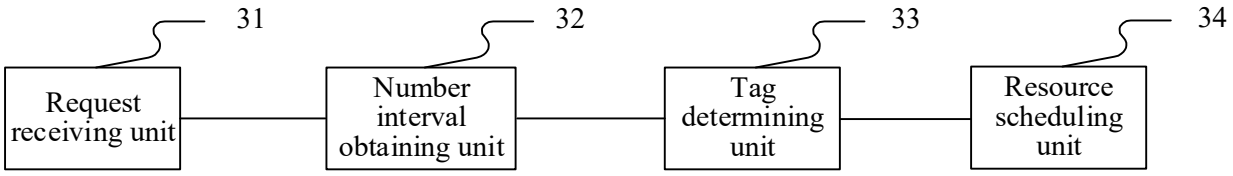

FIG. 3

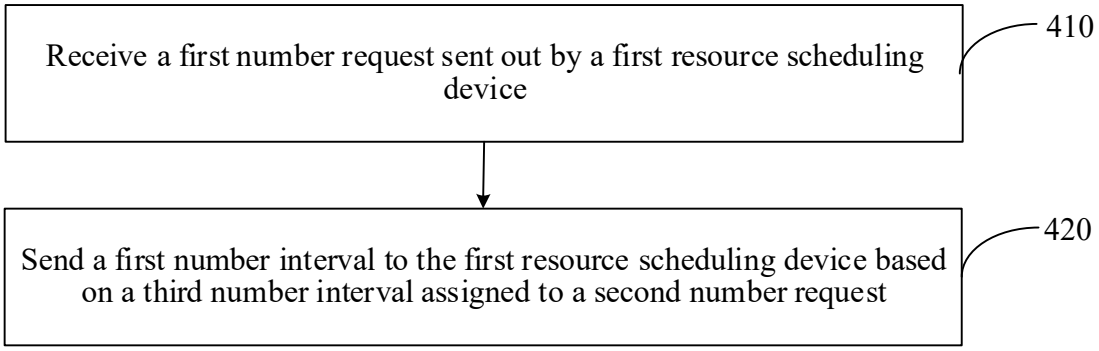

FIG. 4

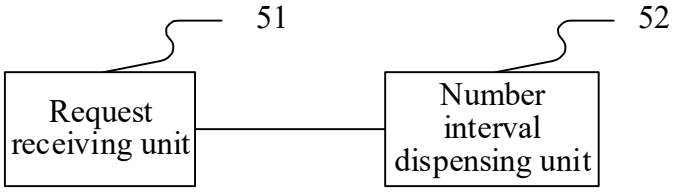

FIG. 5

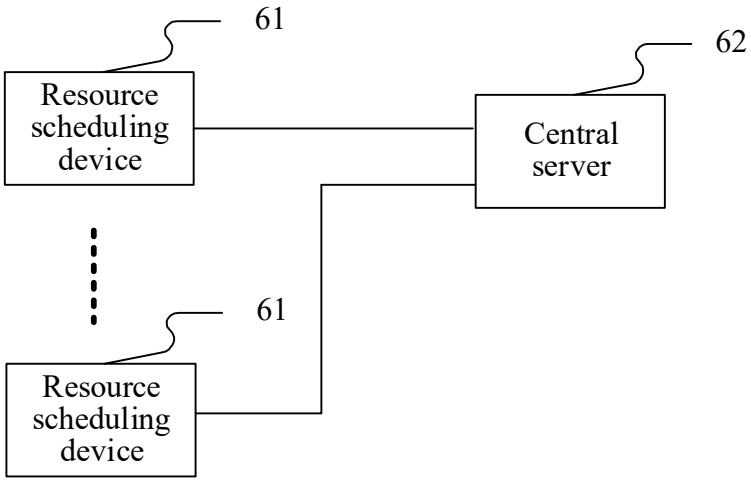

FIG. 6

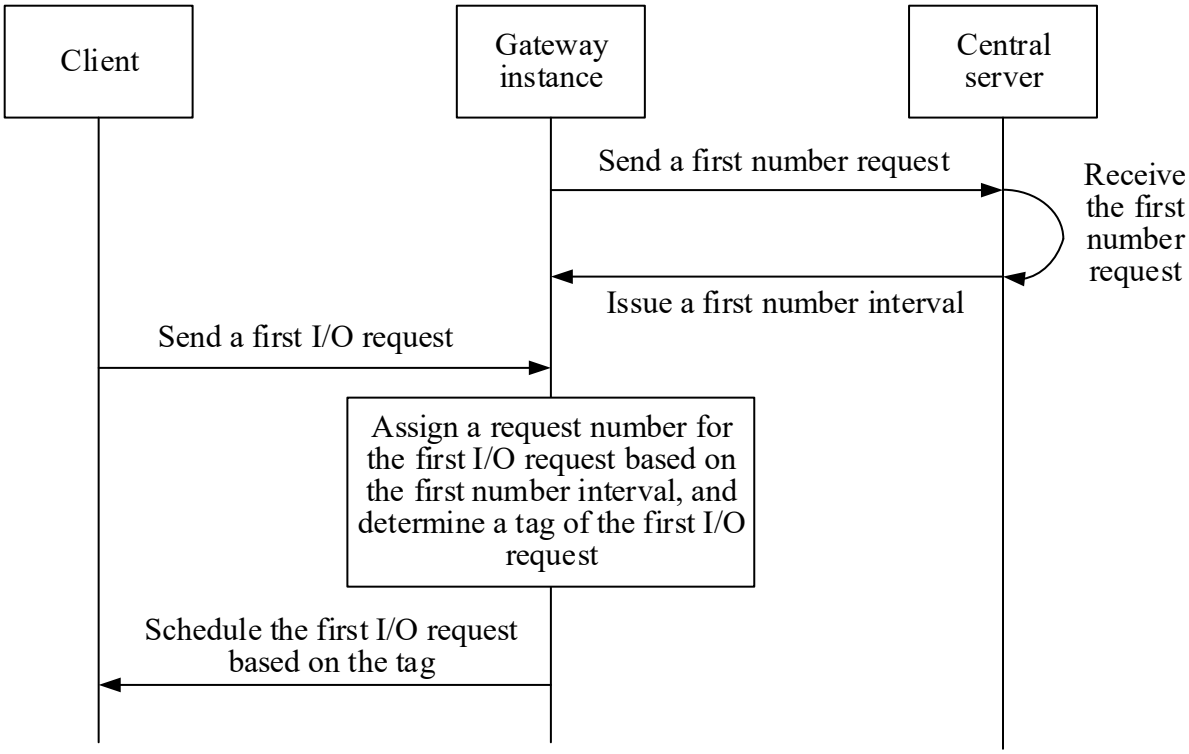
Client
Gateway instance
Central server
Send a first number request
Receive the first number request
Issue a first number interval
Send a first I/O request
Assign a request number for the first I/O request based on the first number interval, and determine a tag of the first I/O request
Schedule the first I/O request based on the tag

FIG. 7

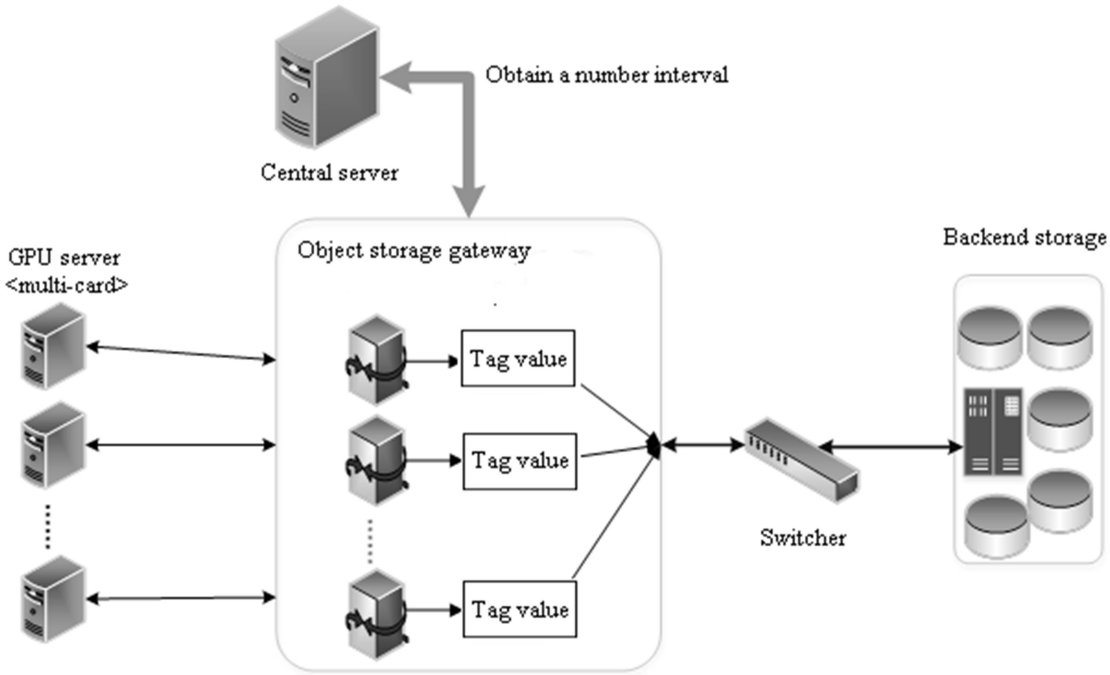
Obtain a number interval
Central server
GPU server
<multi-card>
Object storage gateway
Tag value
Tag value
Tag value
Switcher
Backend storage

FIG. 8

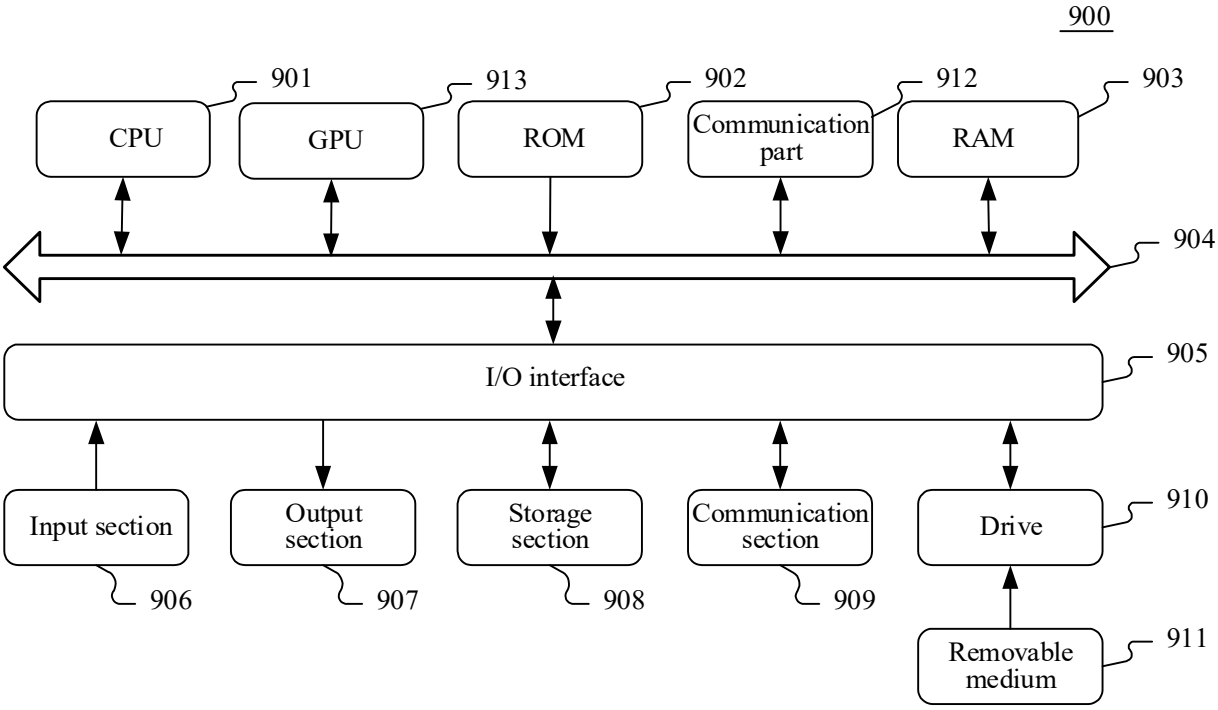
900
901
913
902
912
903
CPU
GPU
ROM
Communication part
RAM
904
I/O interface
905
Input section
Output section
Storage section
Communication section
Drive
910
906
907
908
909
Removable medium
911

FIG. 9