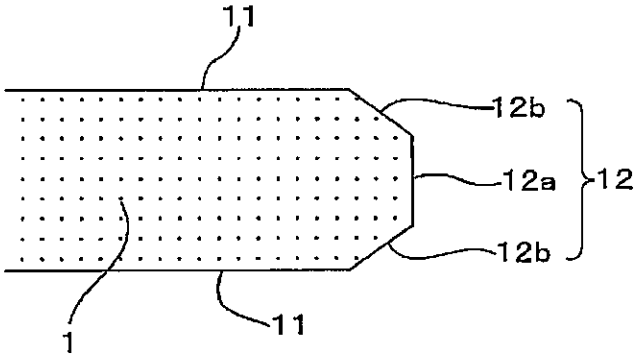

FIG. 1

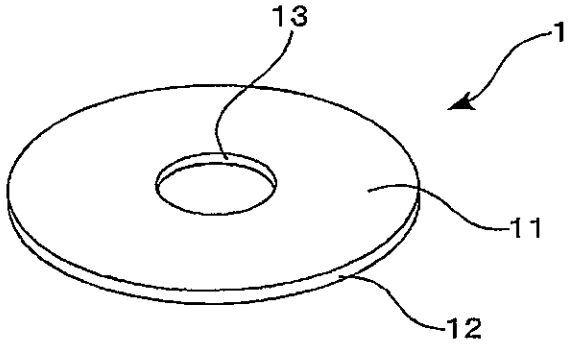

FIG. 2

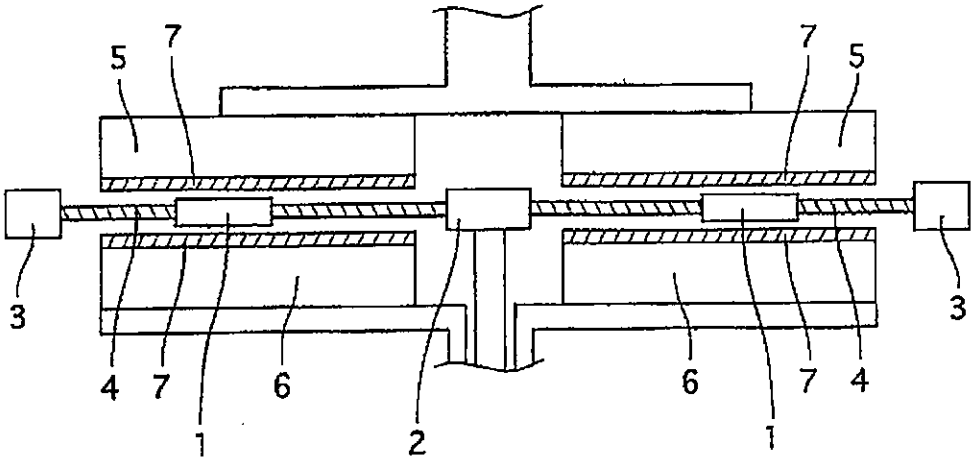

FIG. 3

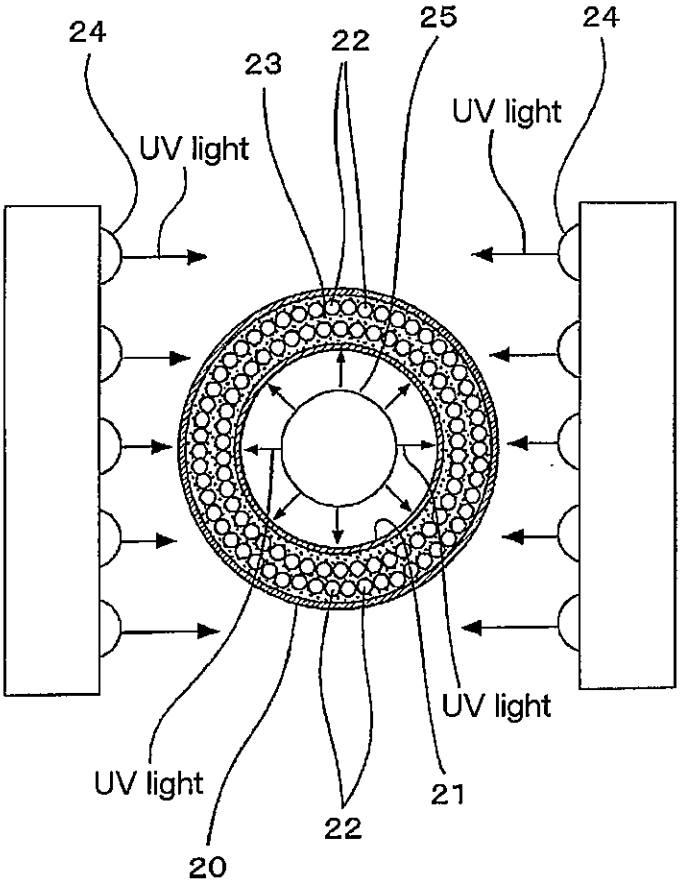
24
23
22
25
24
UV light
UV light
UV light
UV light
21
22
20

FIG. 4

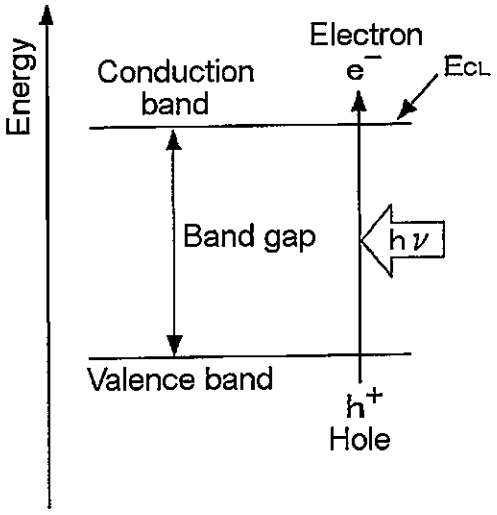
Energy
Electron
e⁻
Conduction band
Ecl
Band gap
hν
Valence band
h⁺
Hole

FIG. 5