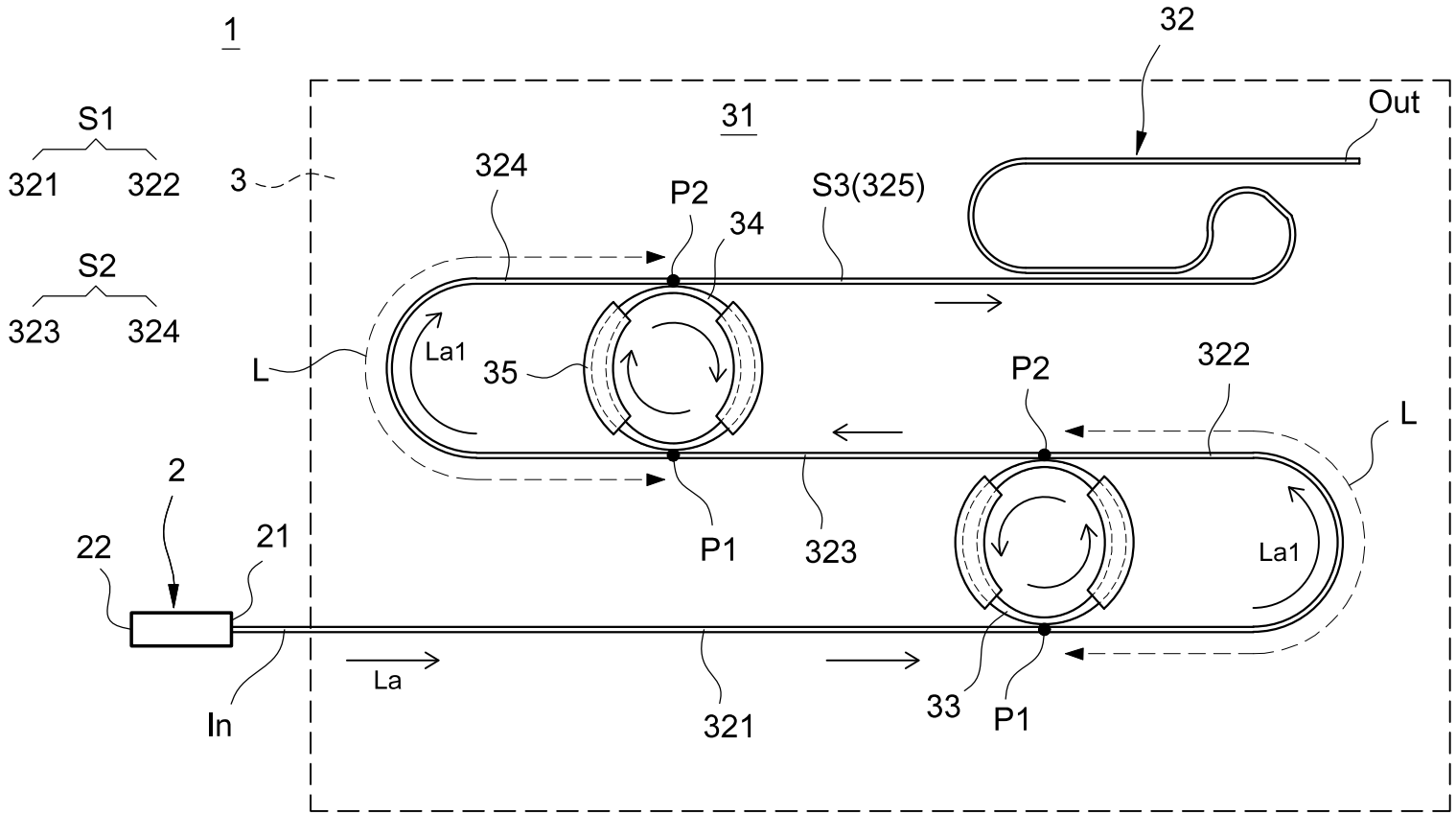
1
S1
321
322
S2
323
324
3
31
32
Out
324
P2
34
S3(325)
L
La1
35
P2
322
L
2
22
21
P1
323
La1
In
La
321
33
P1

FIG.1

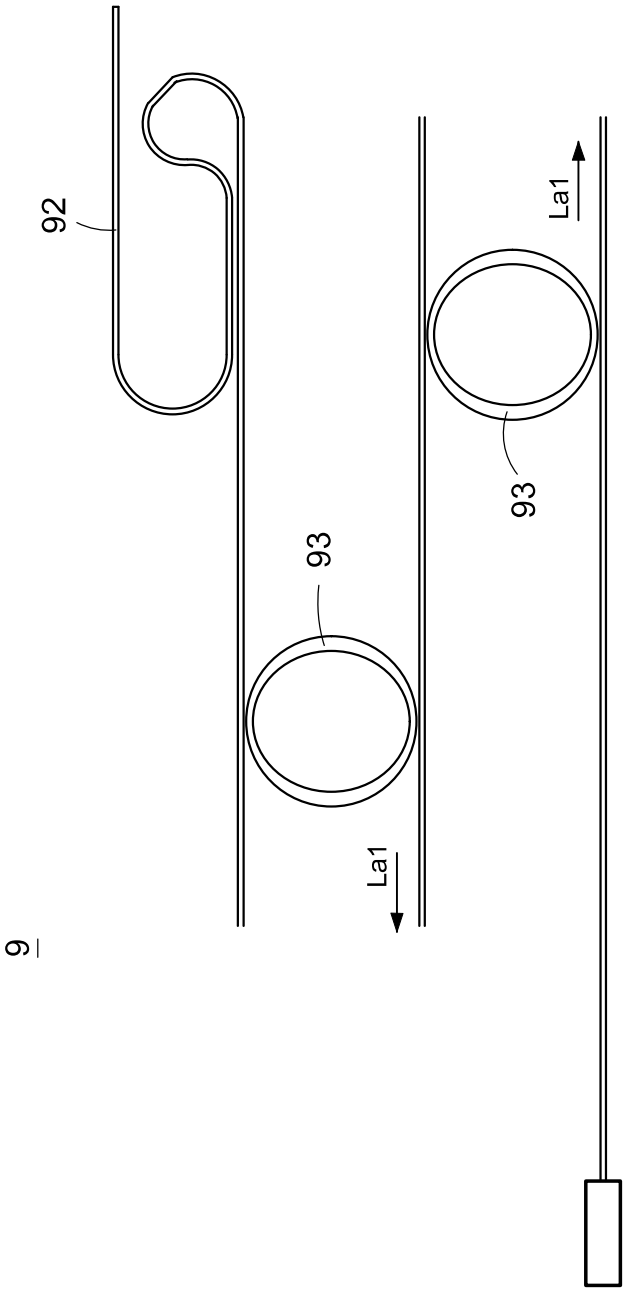

FIG.2

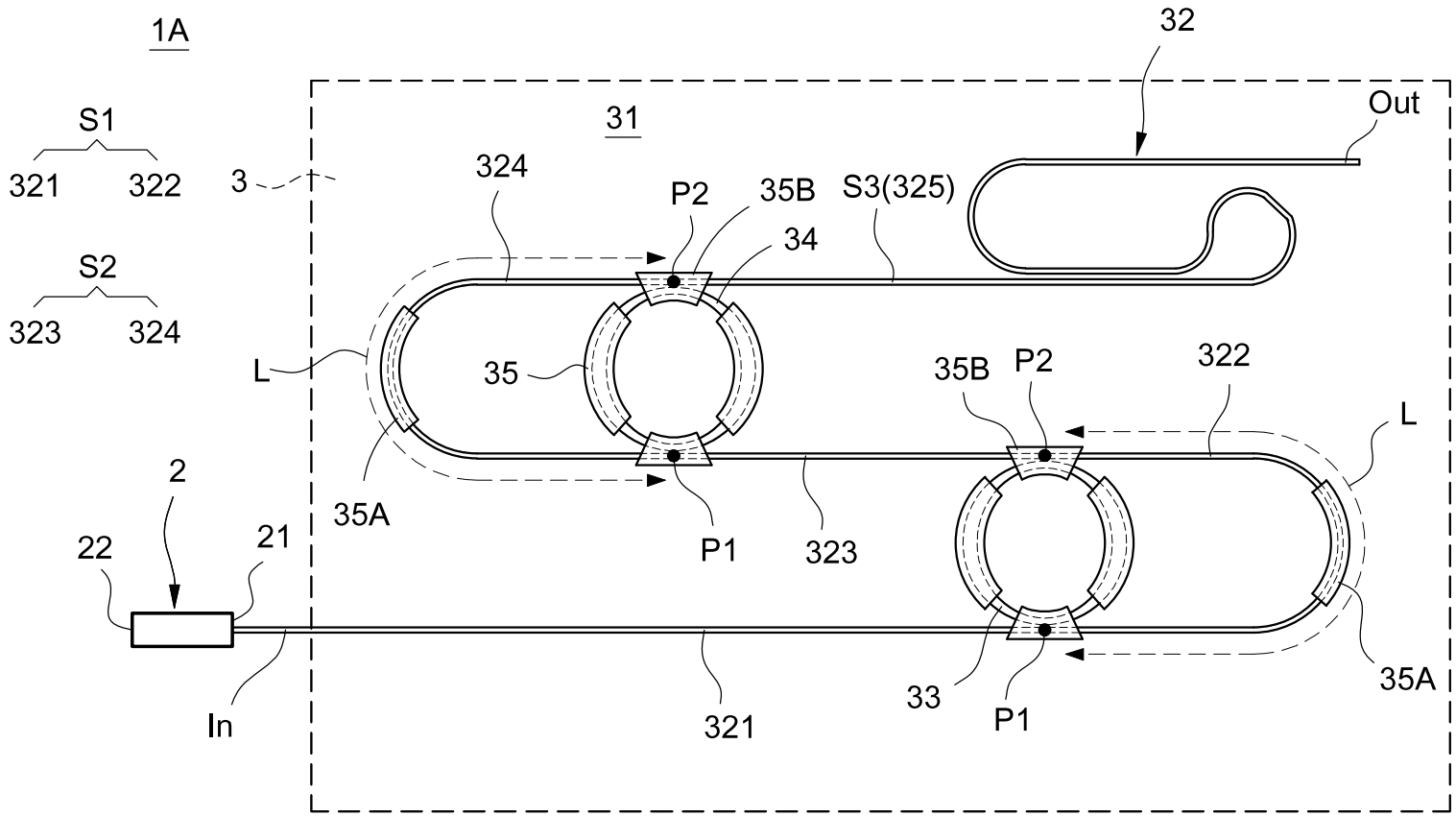
1A
S1
321
322
S2
323
324
3
31
32
Out
324
P2
35B
S3(325)
34
L
35
35B
P2
322
L
2
22
21
35A
P1
323
In
321
33
P1
35A

FIG.3

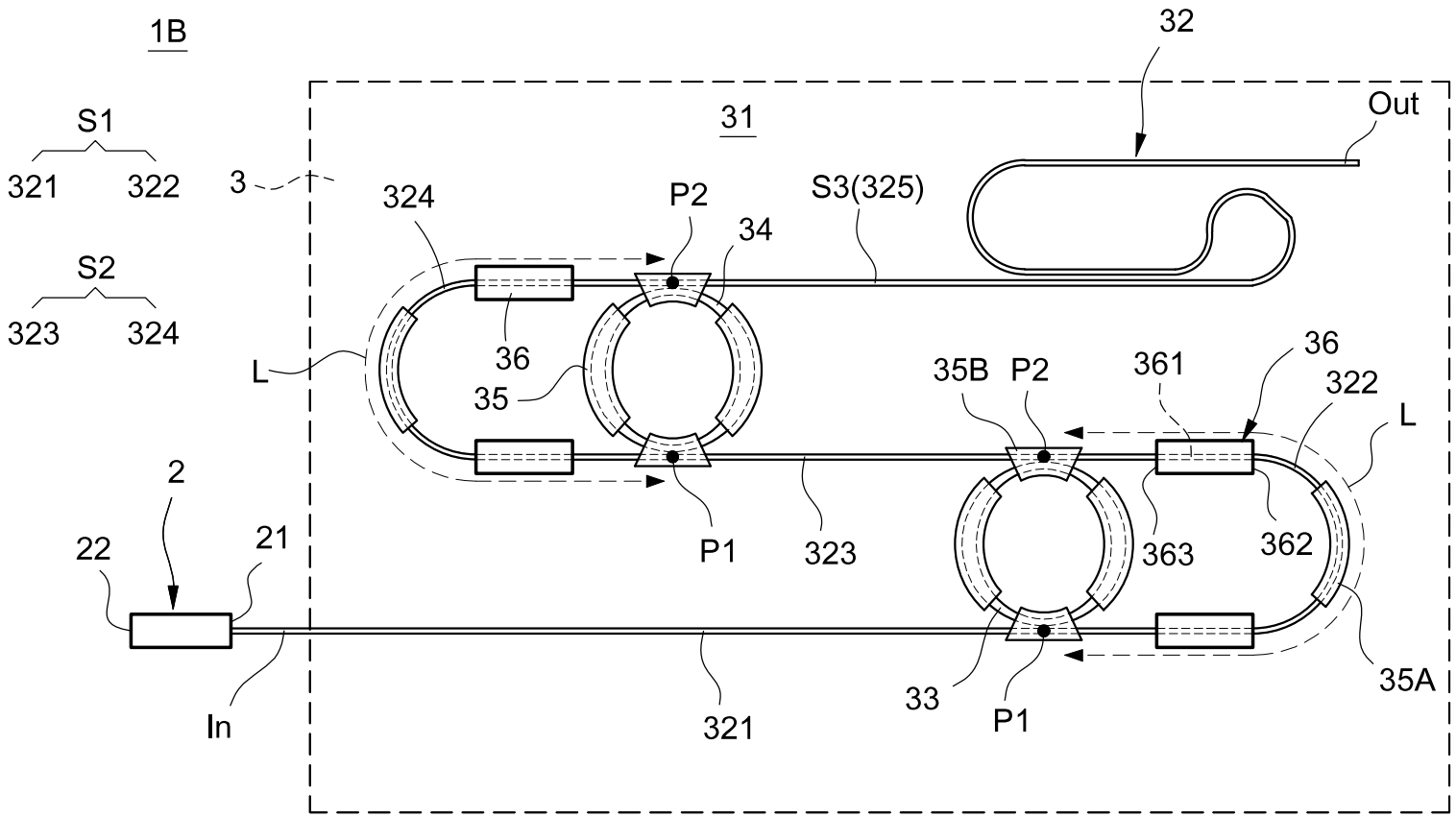
1B
32
31
Out
S1
321
322
3
324
P2
34
S3(325)
S2
323
324
36
L
35
35B
P2
361
36
322
L
2
22
21
P1
323
363
362
In
321
33
P1
35A

FIG.4

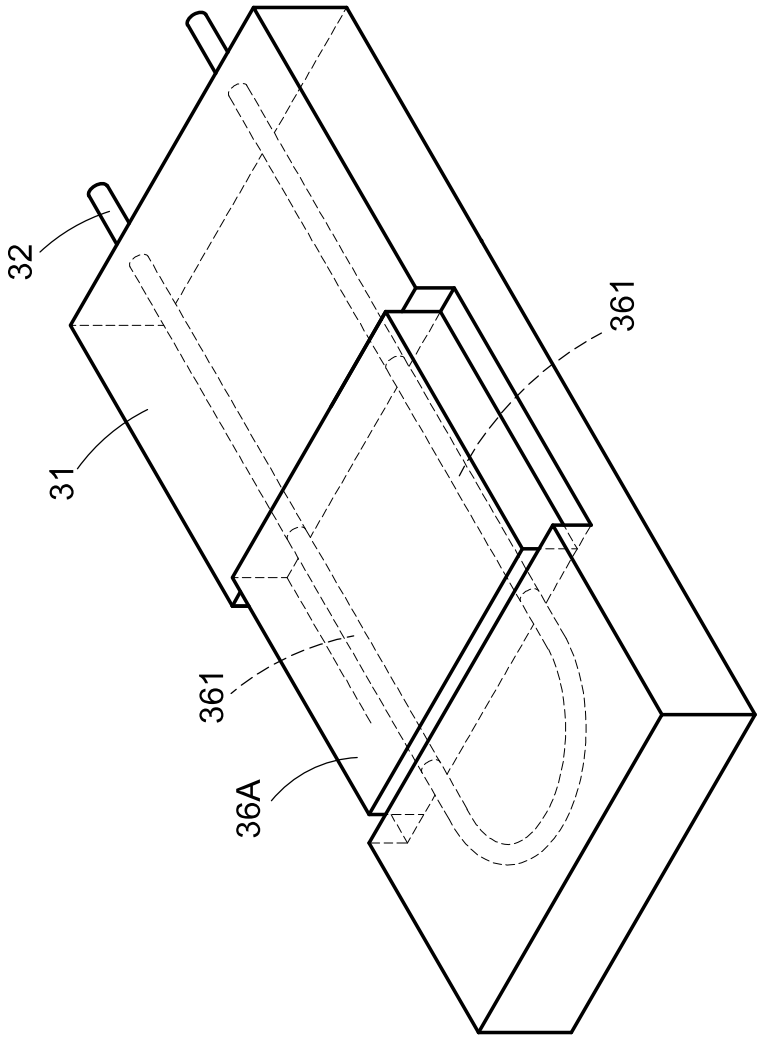

FIG.5

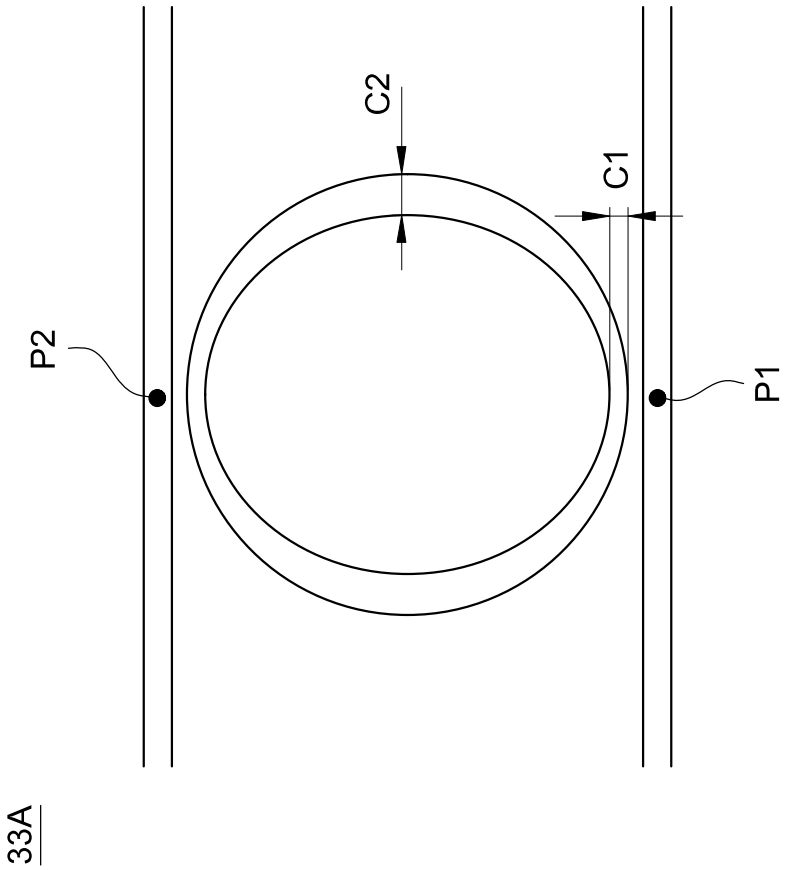

FIG.6

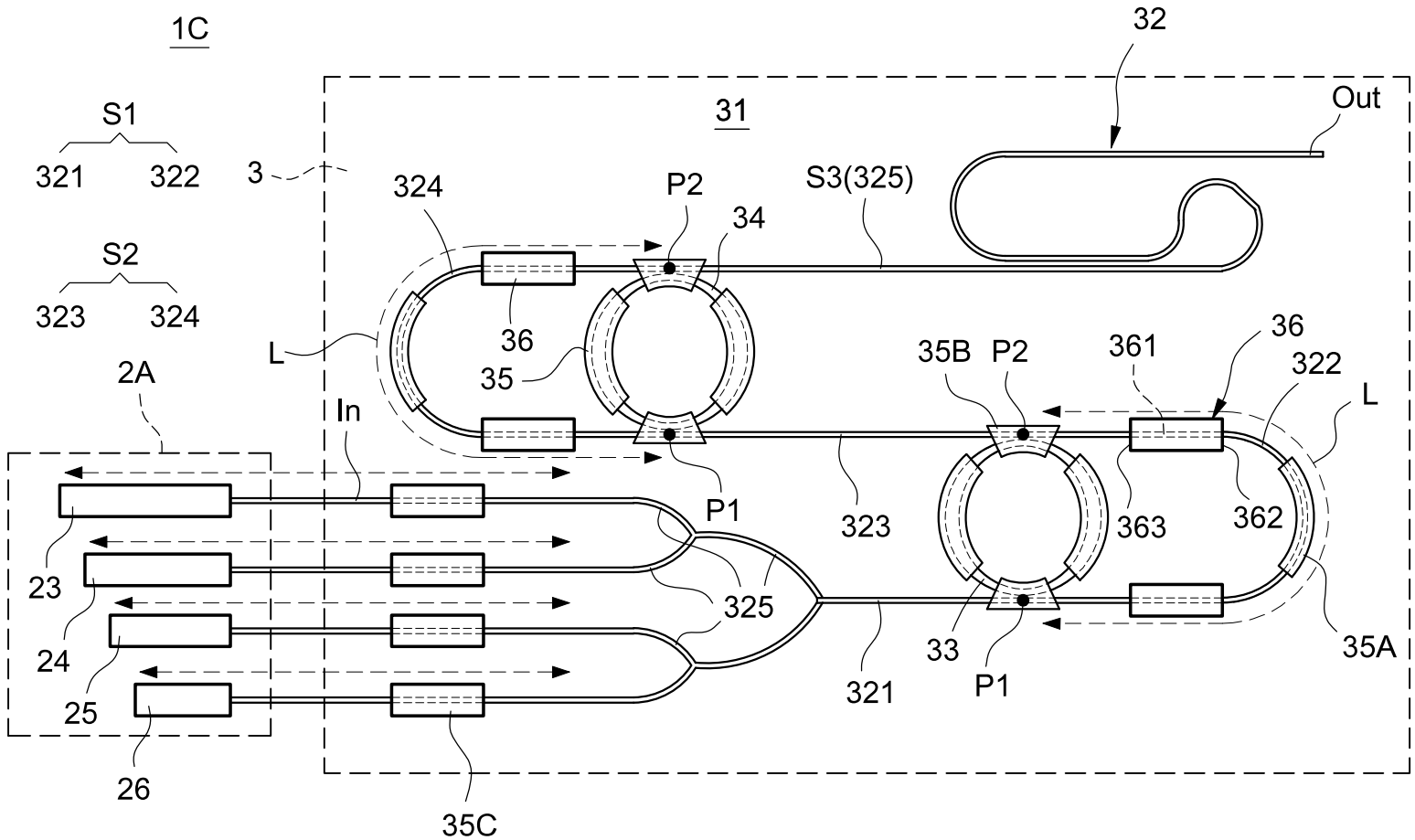
1C
S1
321
322
S2
323
324
3
31
32
Out
324
P2
34
S3(325)
36
35
L
2A
In
P1
323
35B
P2
361
36
322
L
363
362
23
24
25
26
325
33
P1
321
35A
35C

FIG.7

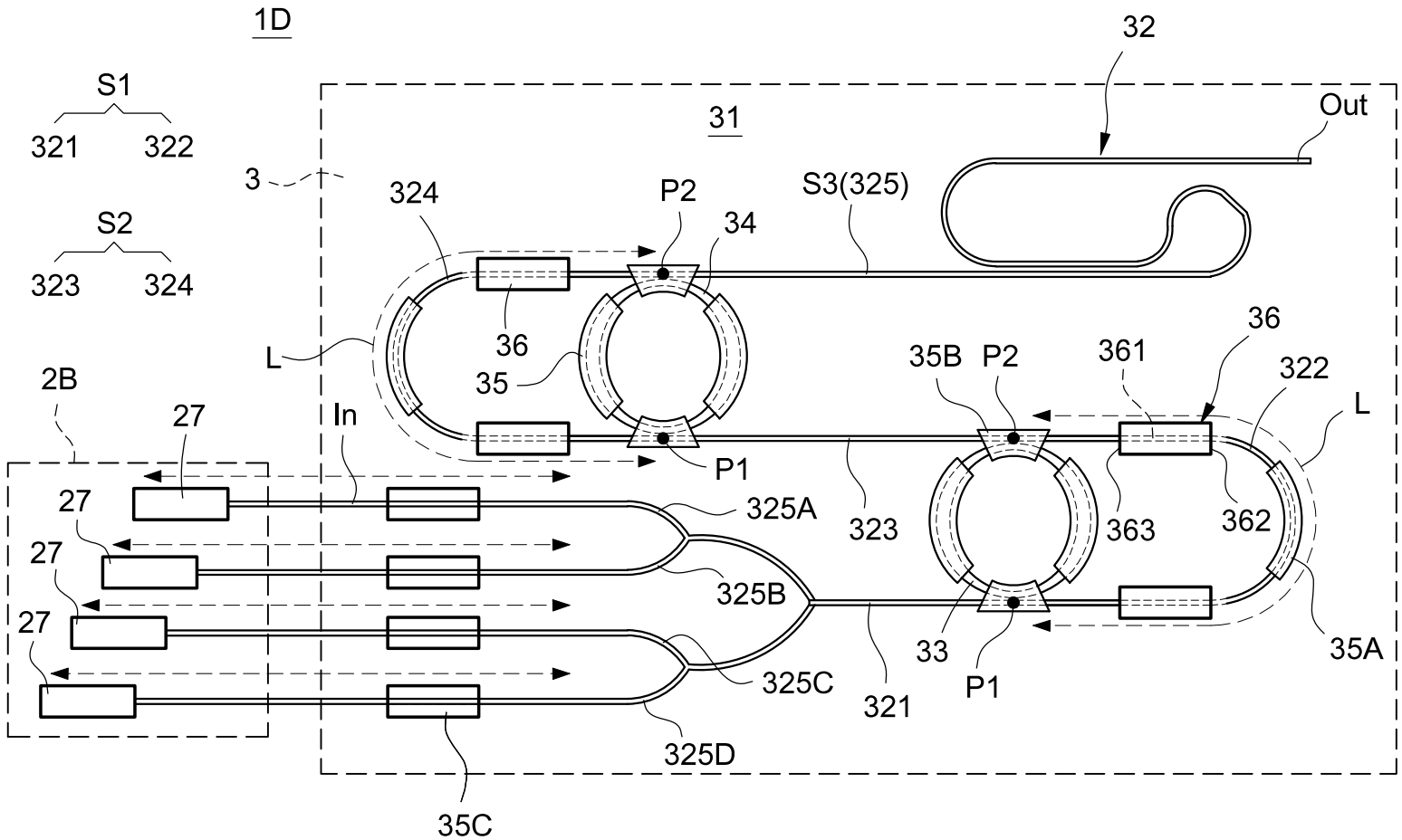
1D
S1
321
322
S2
323
324
3
31
32
Out
S3(325)
324
P2
34
36
35
L
2B
27
In
P1
325A
325B
325C
325D
35C
323
321
33
P1
35B
P2
361
36
322
L
363
362
35A

FIG.8

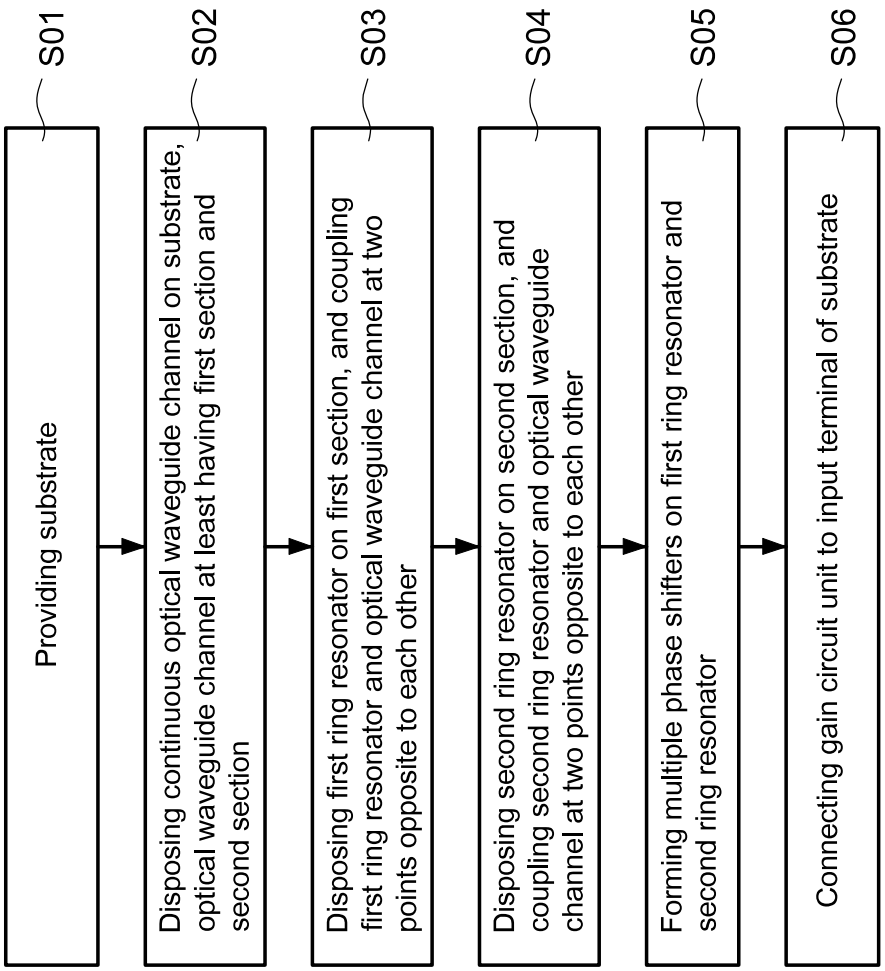
S01
Providing substrate
S02
Disposing continuous optical waveguide channel on substrate, optical waveguide channel at least having first section and second section
S03
Disposing first ring resonator on first section, and coupling first ring resonator and optical waveguide channel at two points opposite to each other
S04
Disposing second ring resonator on second section, and coupling second ring resonator and optical waveguide channel at two points opposite to each other
S05
Forming multiple phase shifters on first ring resonator and second ring resonator
S06
Connecting gain circuit unit to input terminal of substrate

FIG.9

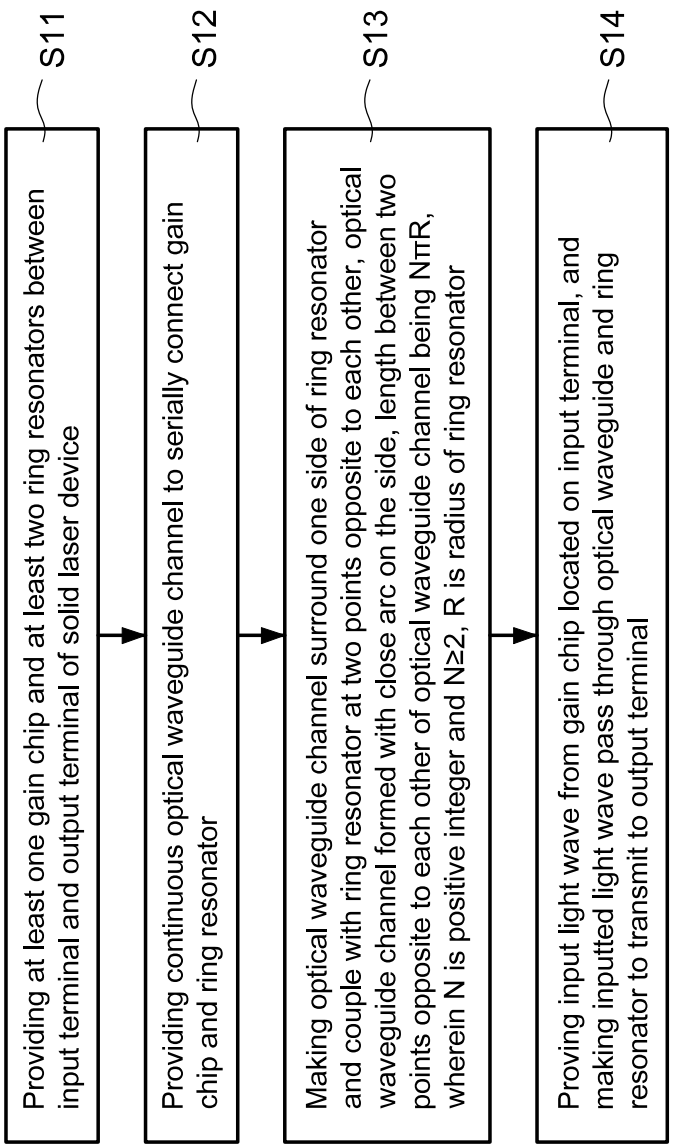
S11
Providing at least one gain chip and at least two ring resonators between input terminal and output terminal of solid laser device
S12
Providing continuous optical waveguide channel to serially connect gain chip and ring resonator
S13
Making optical waveguide channel surround one side of ring resonator and couple with ring resonator at two points opposite to each other, optical waveguide channel formed with close arc on the side, length between two points opposite to each other of optical waveguide channel being NπR, wherein N is positive integer and N≥2, R is radius of ring resonator
S14
Proving input light wave from gain chip located on input terminal, and making inputted light wave pass through optical waveguide and ring resonator to transmit to output terminal

FIG.10