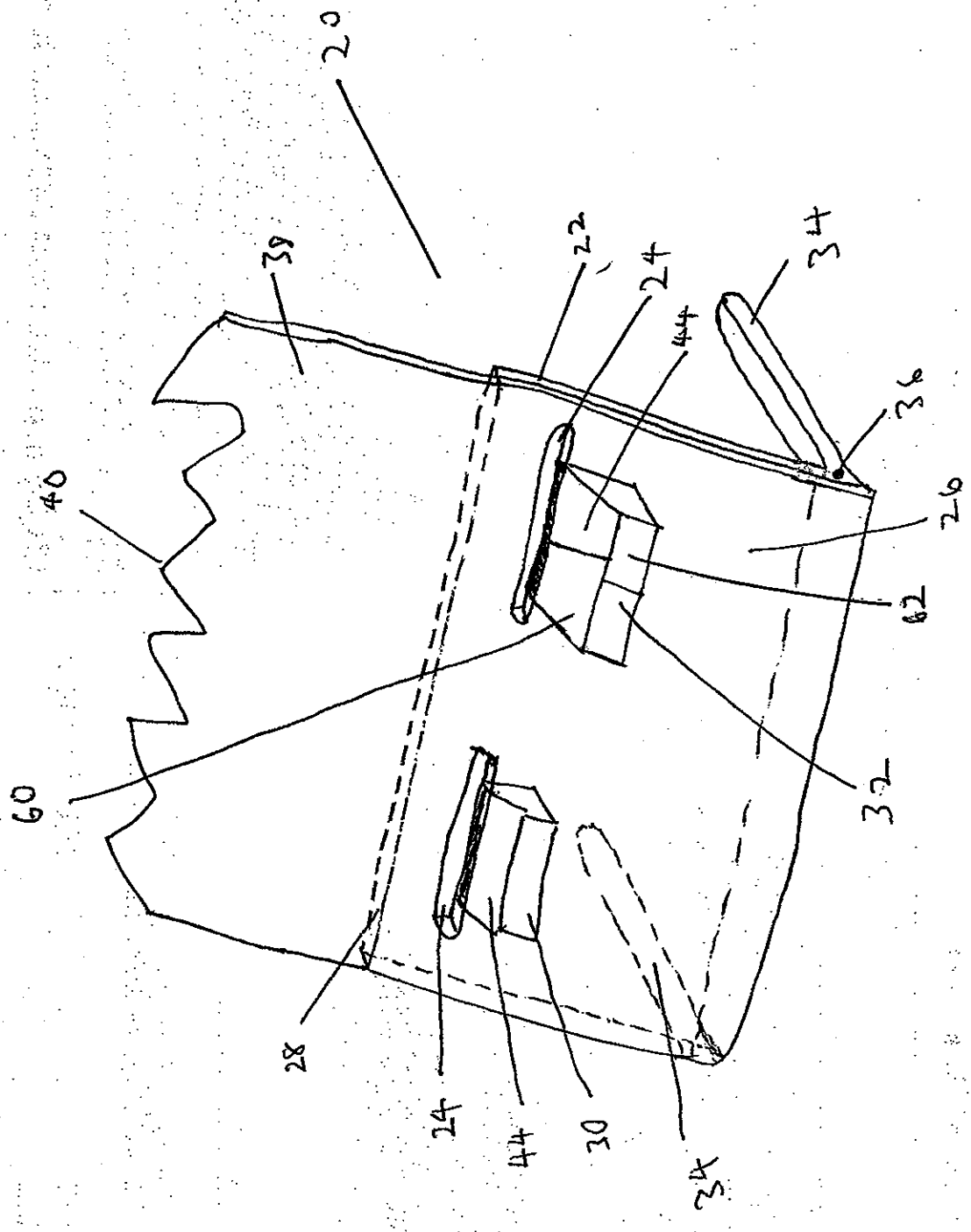


Figure 1

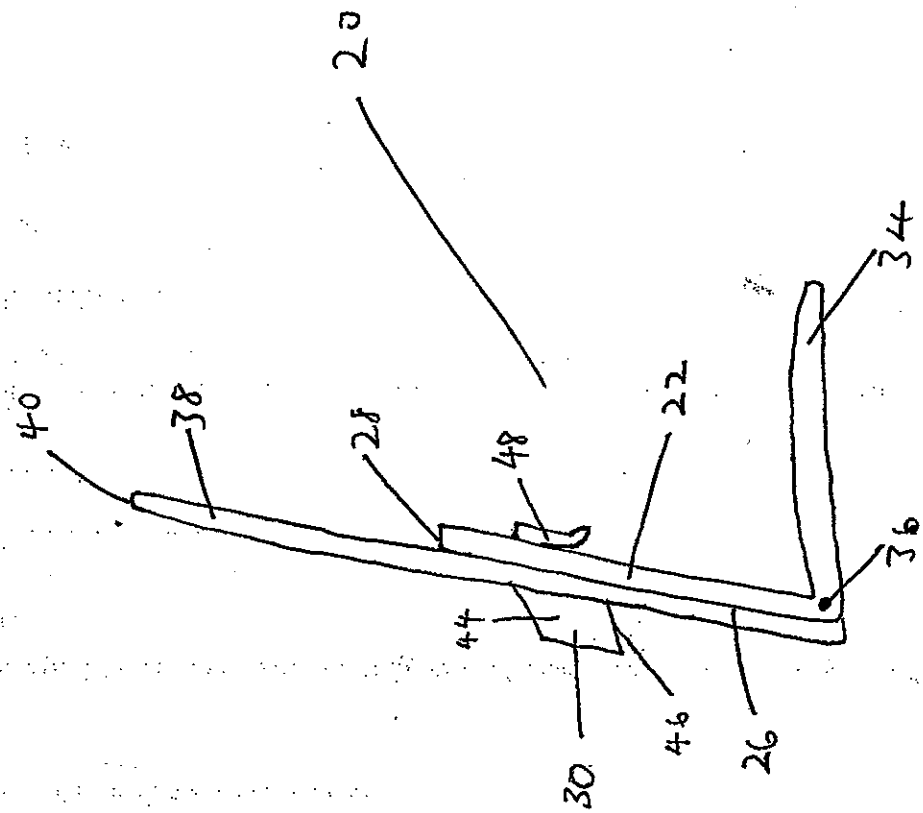


Figure 2

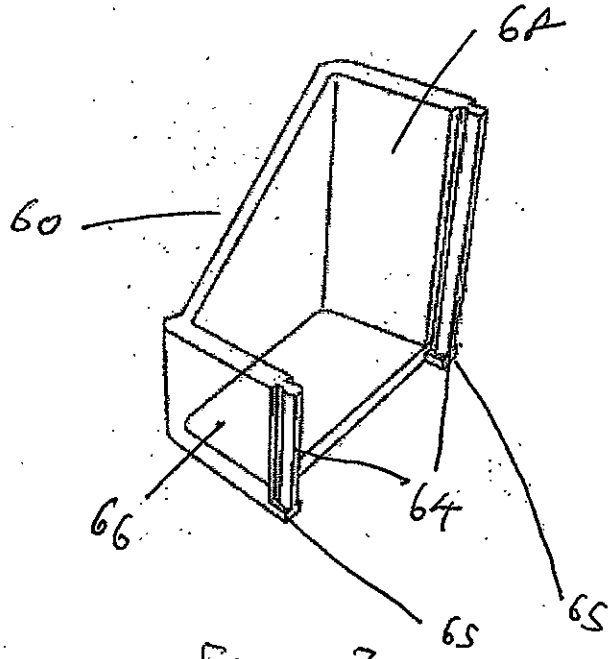


Figure 3

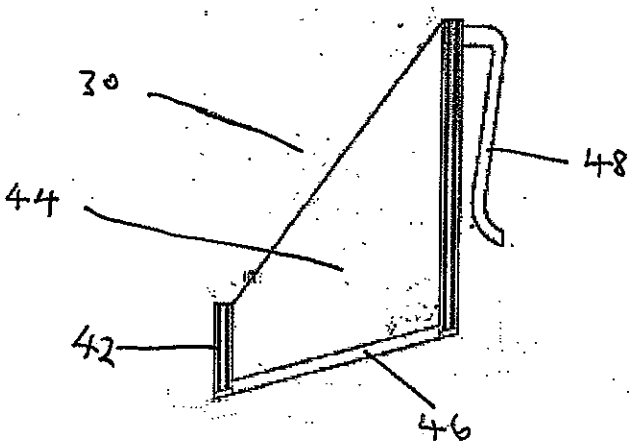


Figure 4

(a)

(b)

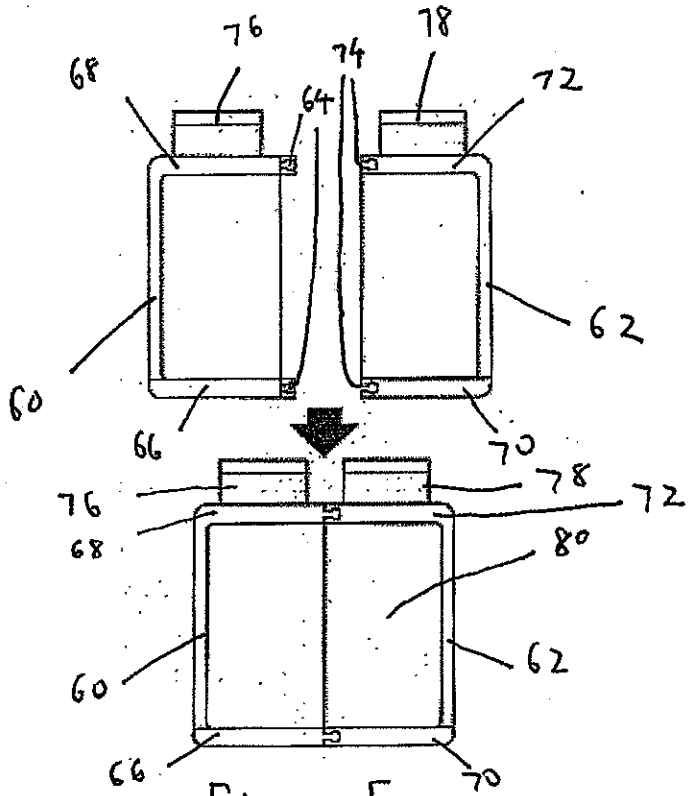


Figure 5

(a)

(b)

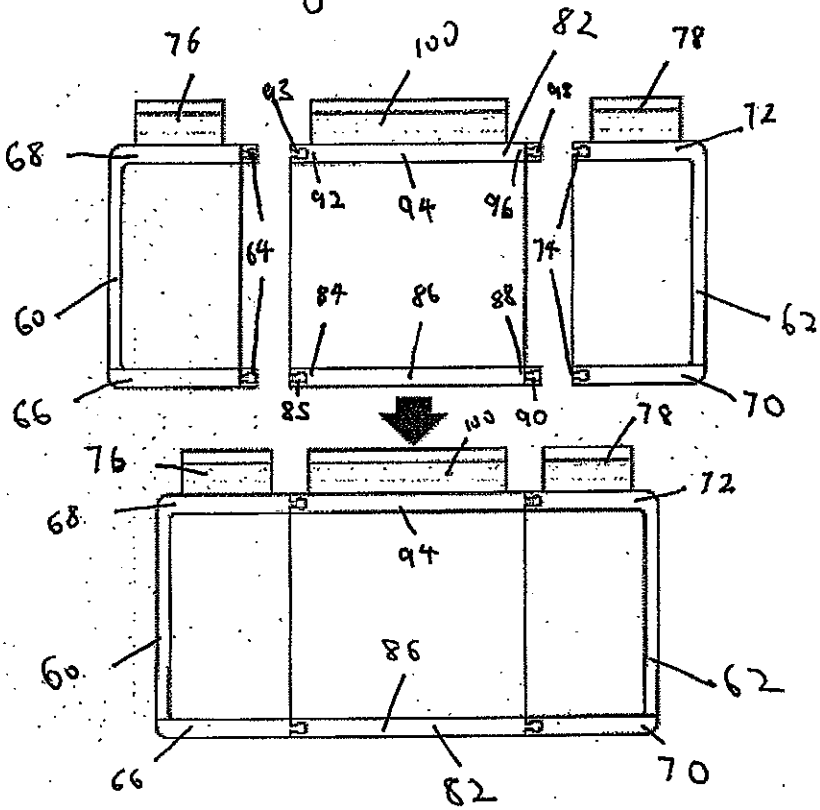


Figure 6