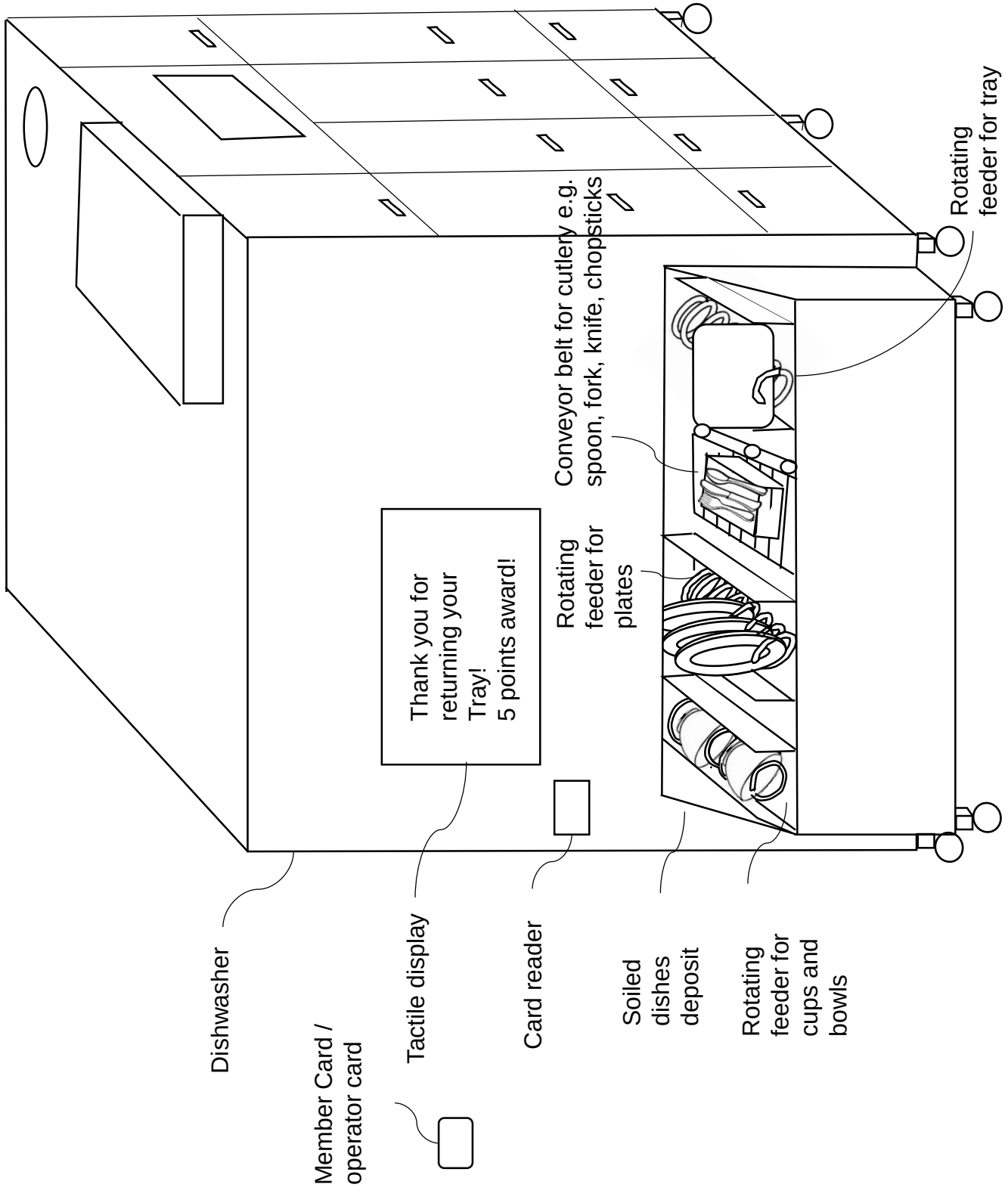
Dishwasher
Member Card / operator card
Tactile display
Thank you for returning your Tray!
5 points award!
Card reader
Rotating feeder for plates
Conveyor belt for cutlery e.g. spoon, fork, knife, chopsticks
Soiled dishes deposit
Rotating feeder for cups and bowls
Rotating feeder for tray

Fig. 1

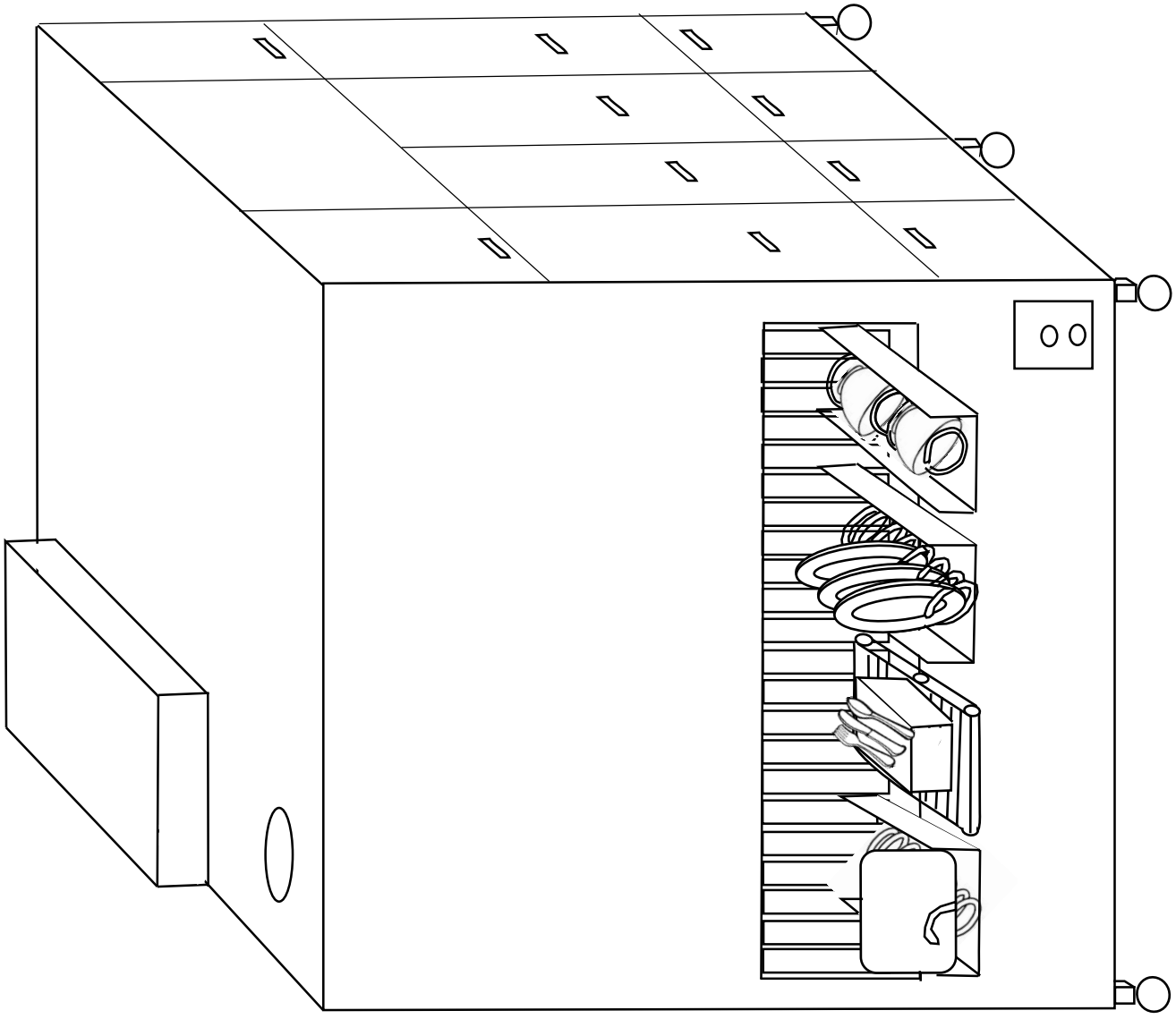

Fig. 2

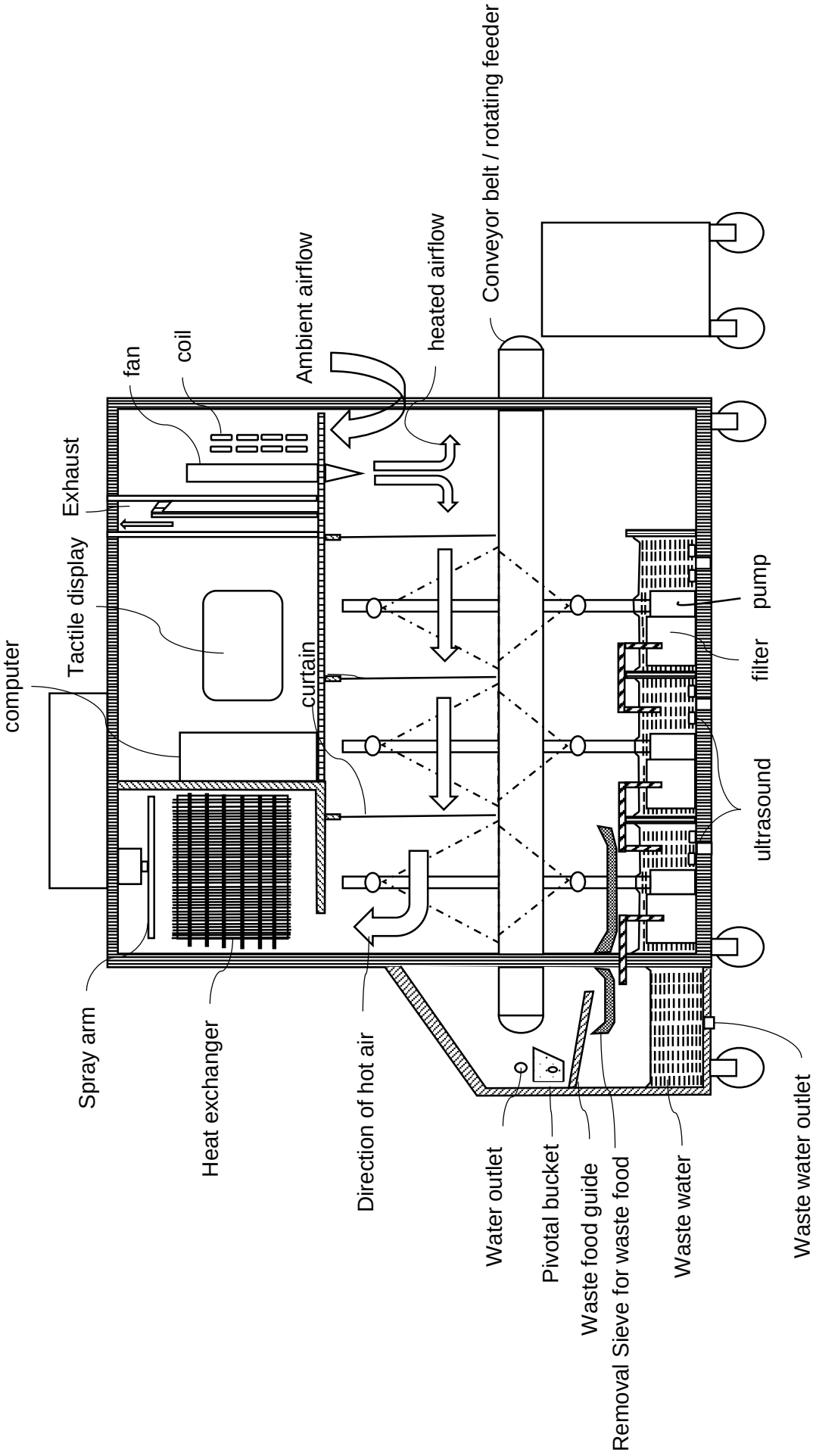
Conveyor belt / rotating feeder
heated airflow
Ambient airflow
coil
fan
Exhaust
Tactile display
computer
curtain
pump
filter
ultrasound
Spray arm
Heat exchanger
Direction of hot air
Water outlet
Pivotal bucket
Waste food guide
Removal Sieve for waste food
Waste water
Waste water outlet

Fig. 3

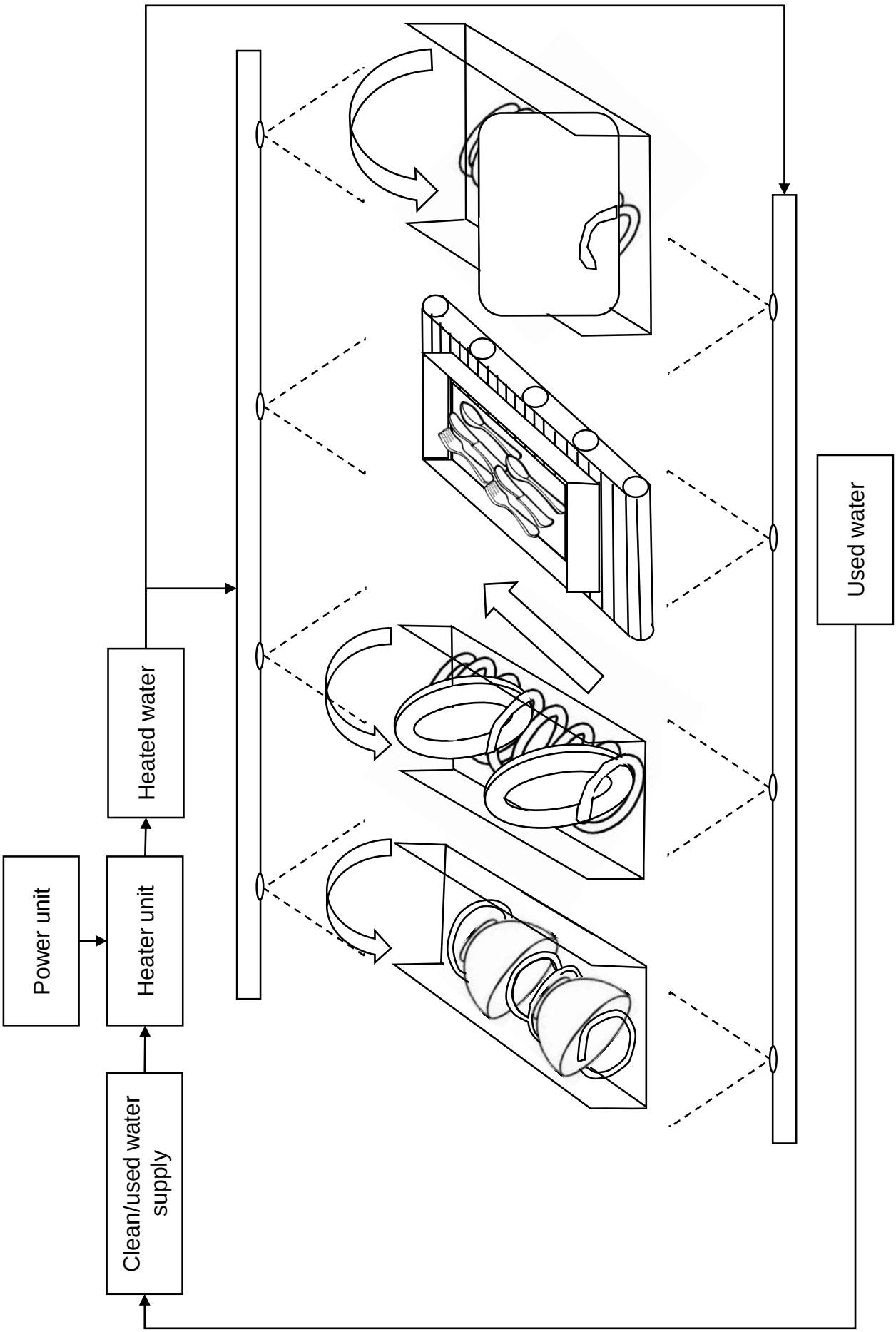
Power unit
Heater unit
Heated water
Clean/used water supply
Used water

Fig. 4

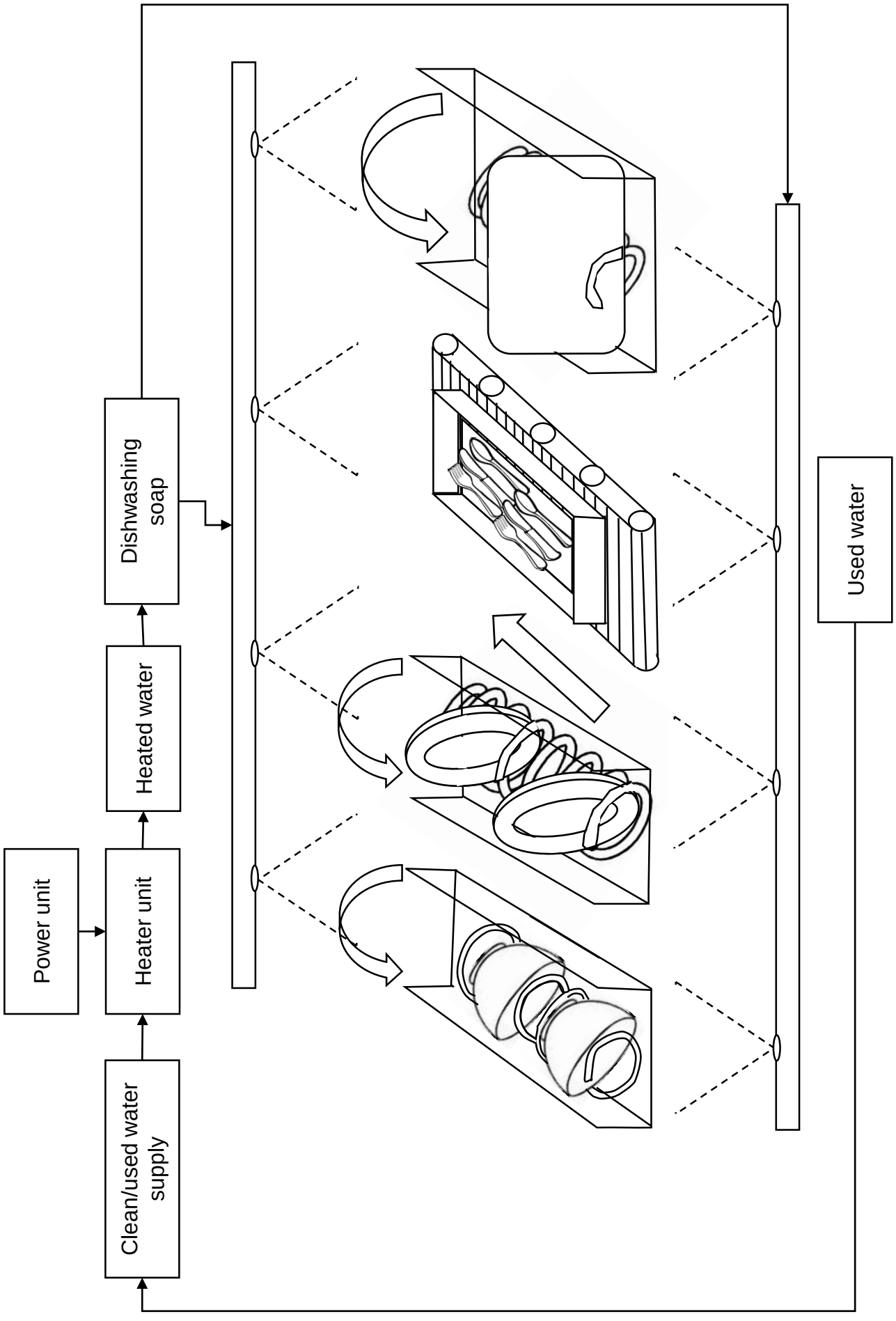
Power unit
Heater unit
Heated water
Dishwashing soap
Clean/used water supply
Used water

Fig. 5

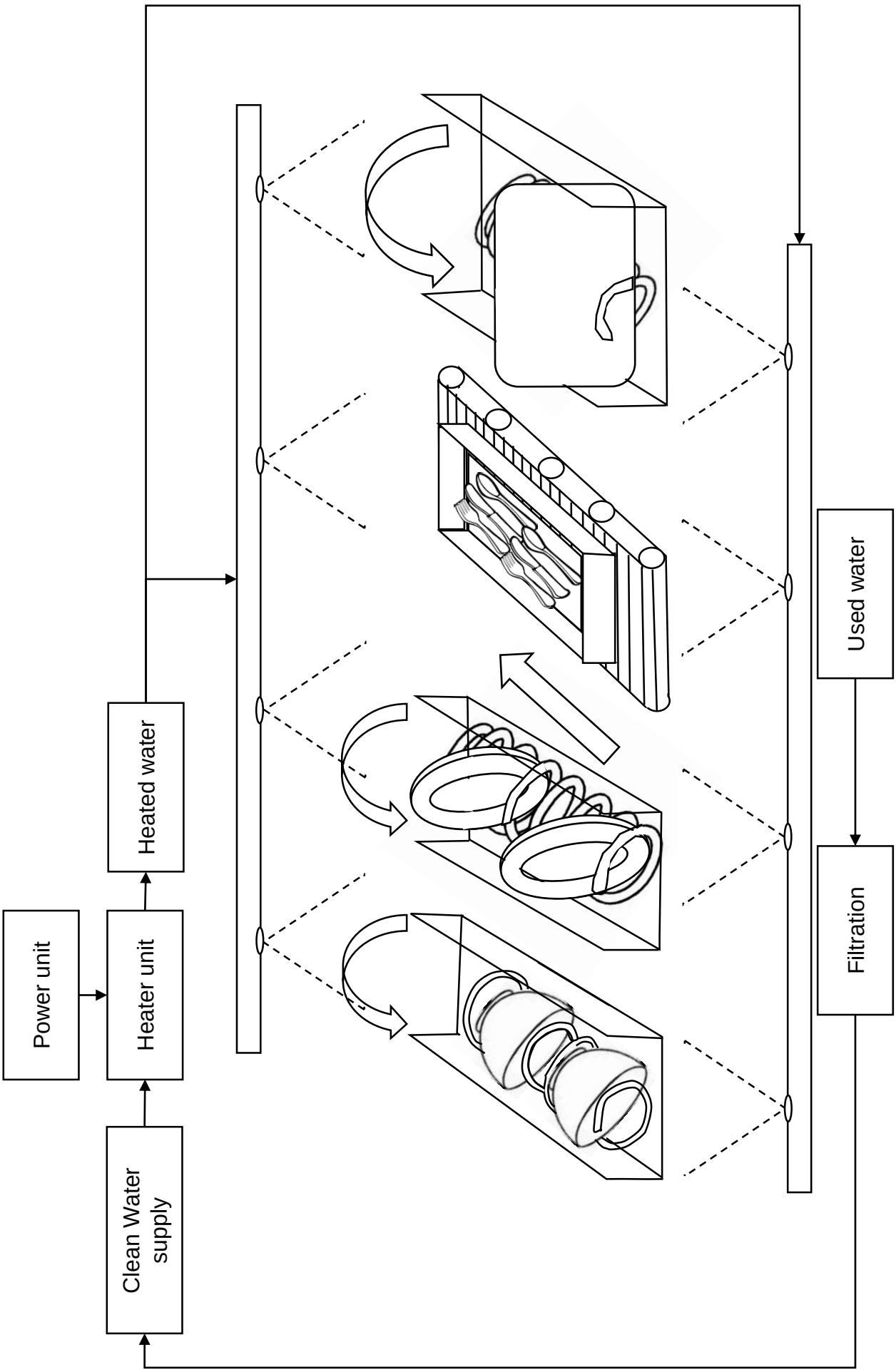
Power unit
Heater unit
Heated water
Clean Water supply
Used water
Filtration

Fig. 6

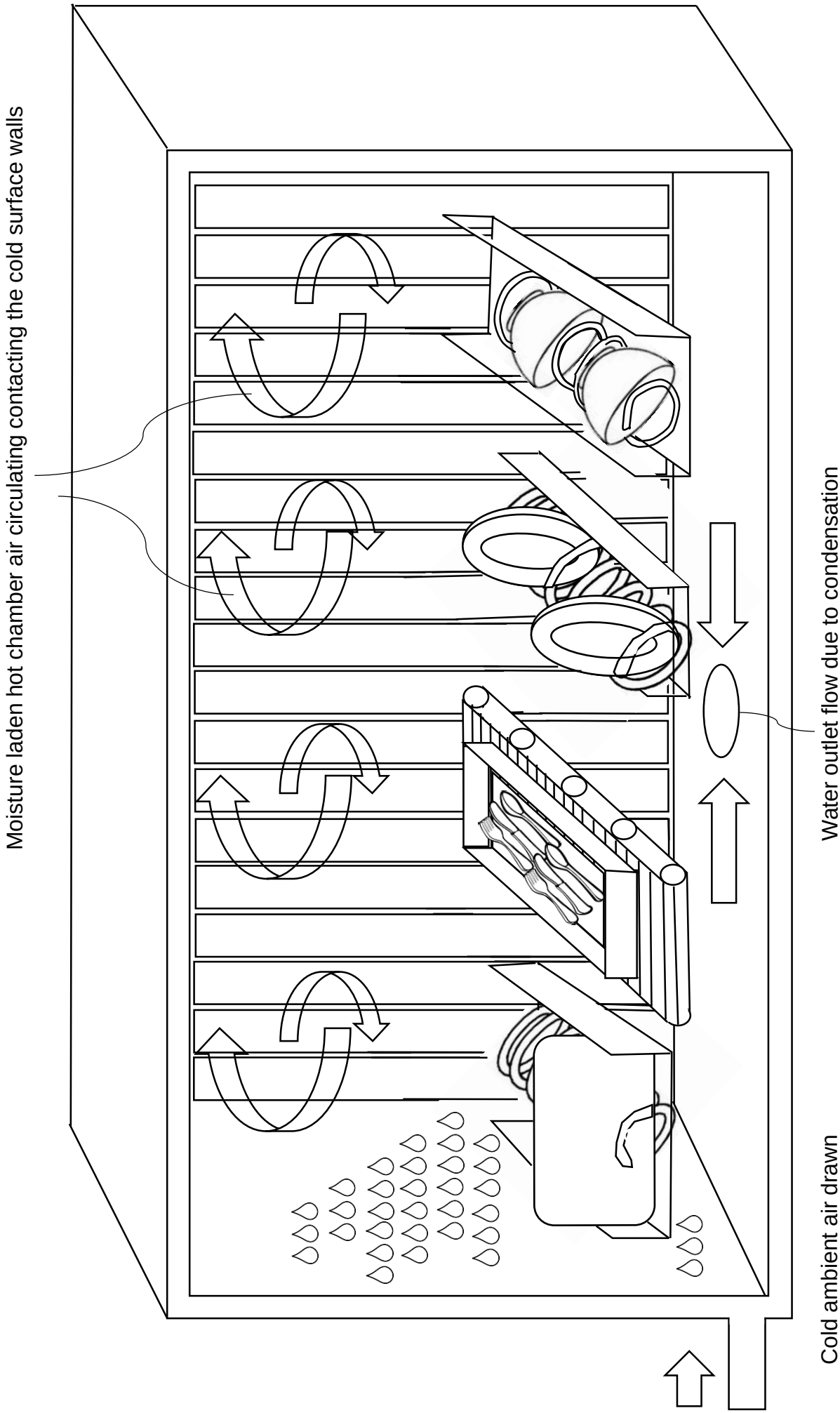
Moisture laden hot chamber air circulating contacting the cold surface walls
Water outlet flow due to condensation
Cold ambient air drawn

Fig. 7

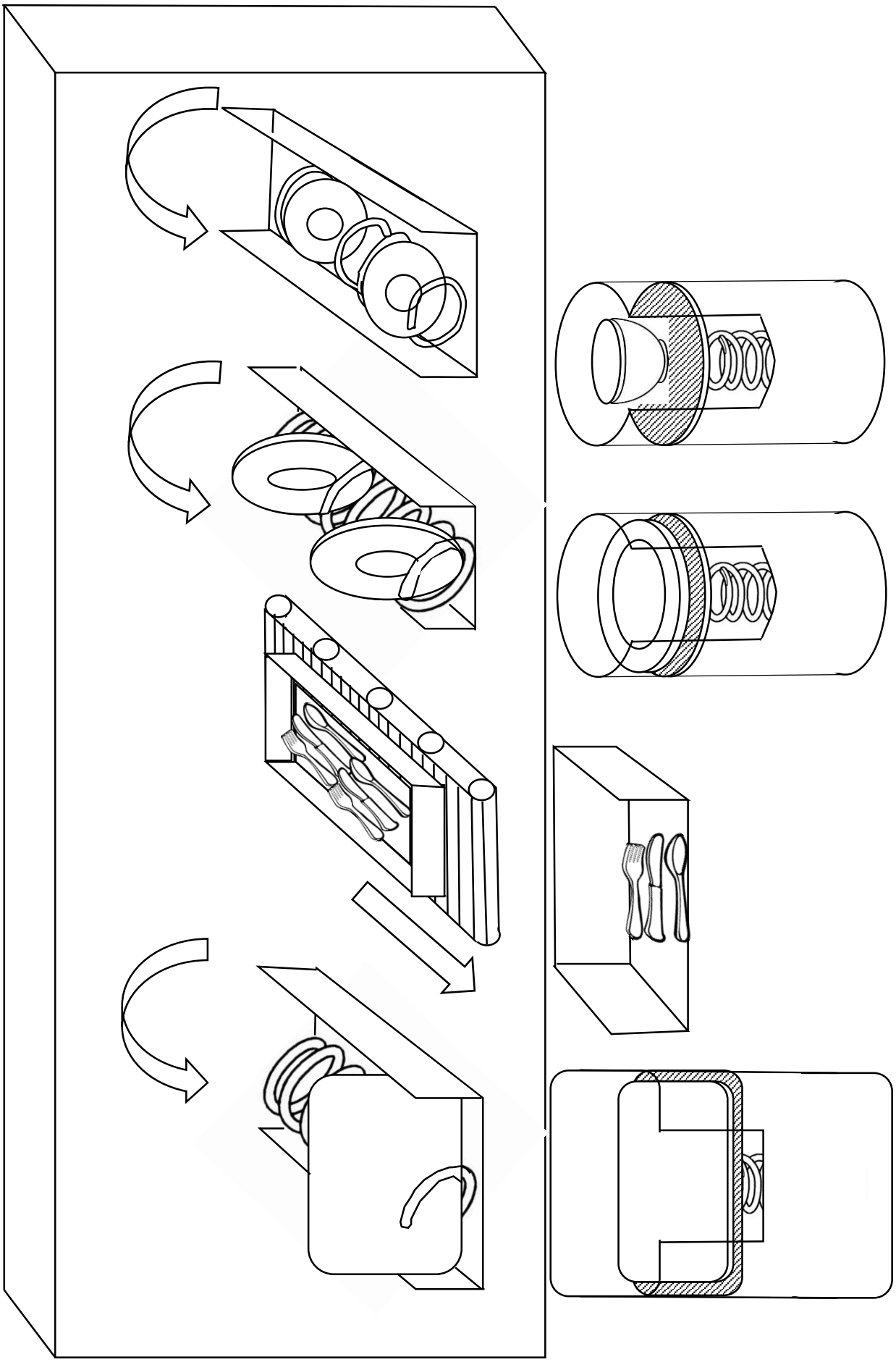

Fig. 8

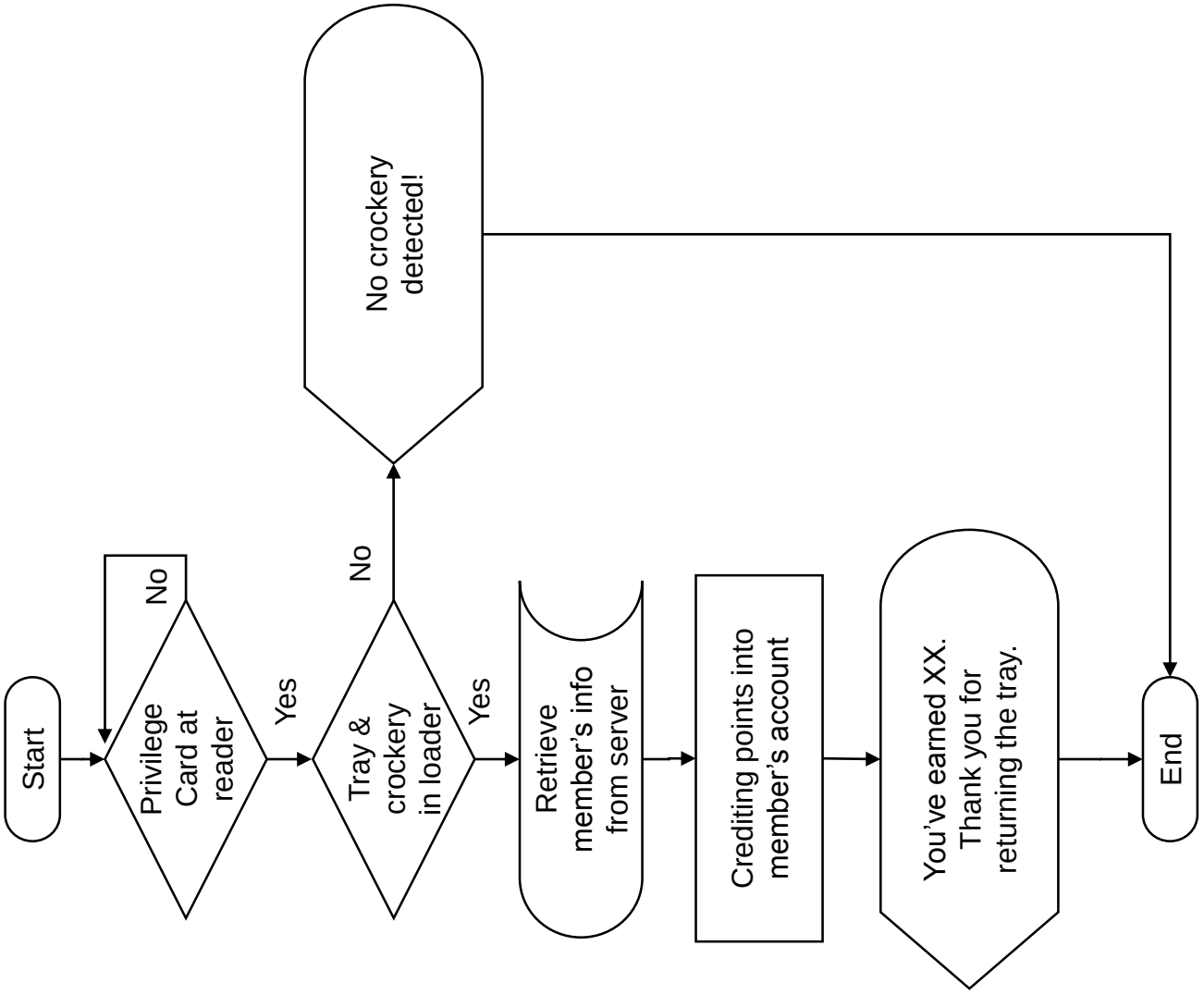
Start
Privilege Card at reader
No
Yes
Tray & crockery in loader
No
Yes
No crockery detected!
Retrieve member's info from server
Crediting points into member's account
You've earned XX. Thank you for returning the tray.
End

Fig. 9

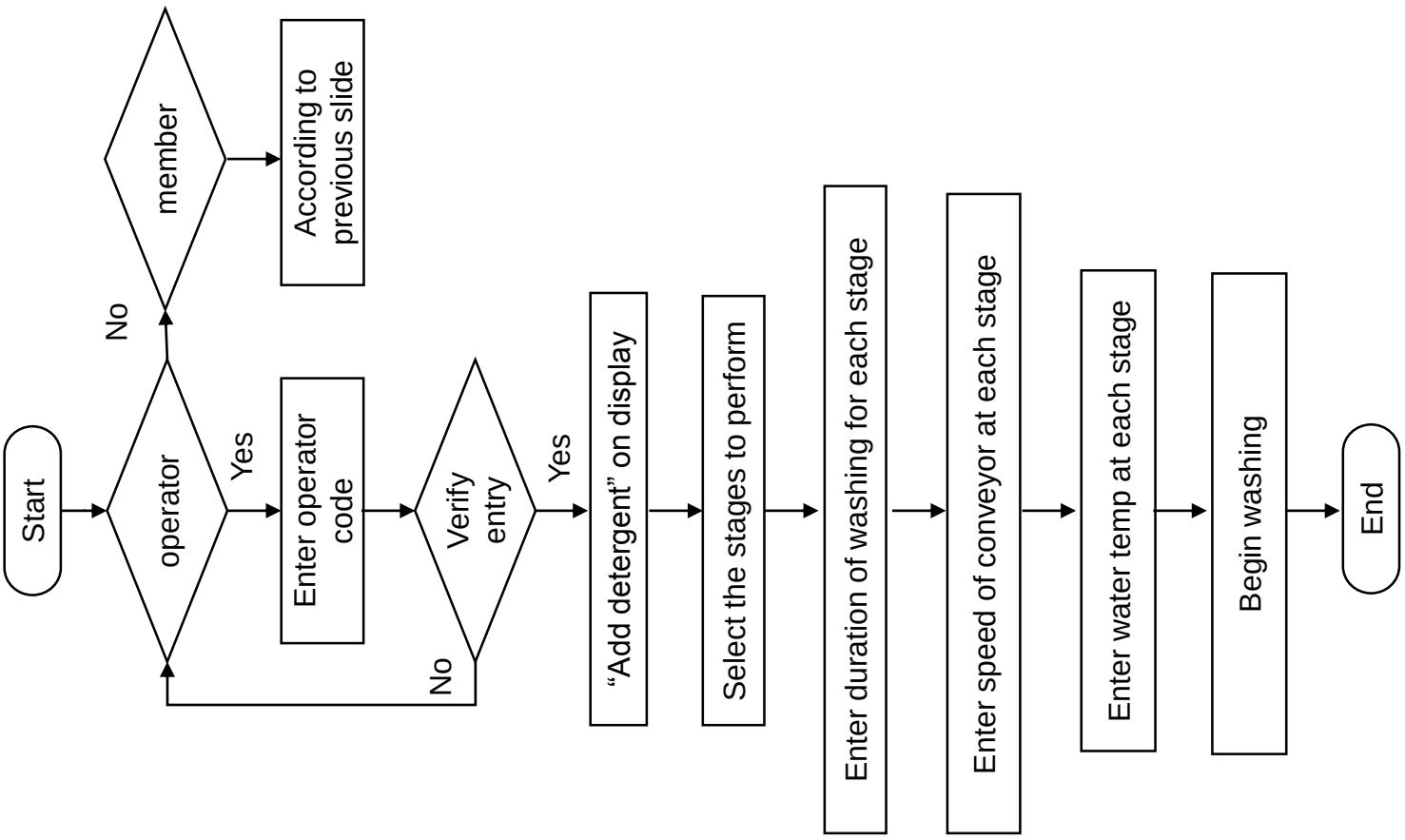
Start
operator
Yes
No
Enter operator code
member
According to previous slide
Verify entry
Yes
No
"Add detergent" on display
Select the stages to perform
Enter duration of washing for each stage
Enter speed of conveyor at each stage
Enter water temp at each stage
Begin washing
End

Fig. 10

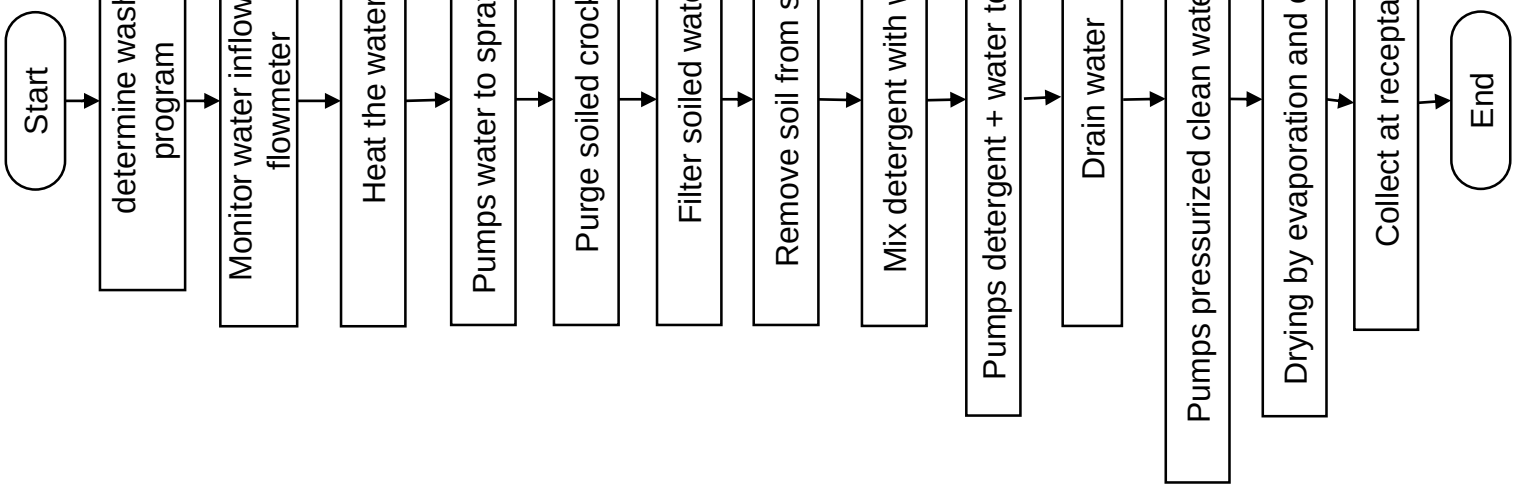
Start
determine wash program
Monitor water inflow via a flowmeter
Heat the water
Pumps water to spray arms
Purge soiled crockery
Filter soiled water
Remove soil from sump
Mix detergent with water
Pumps detergent + water to spray arms
Drain water
Pumps pressurized clean water to spray arms
Drying by evaporation and condensation
Collect at receptacle
End

Fig. 11

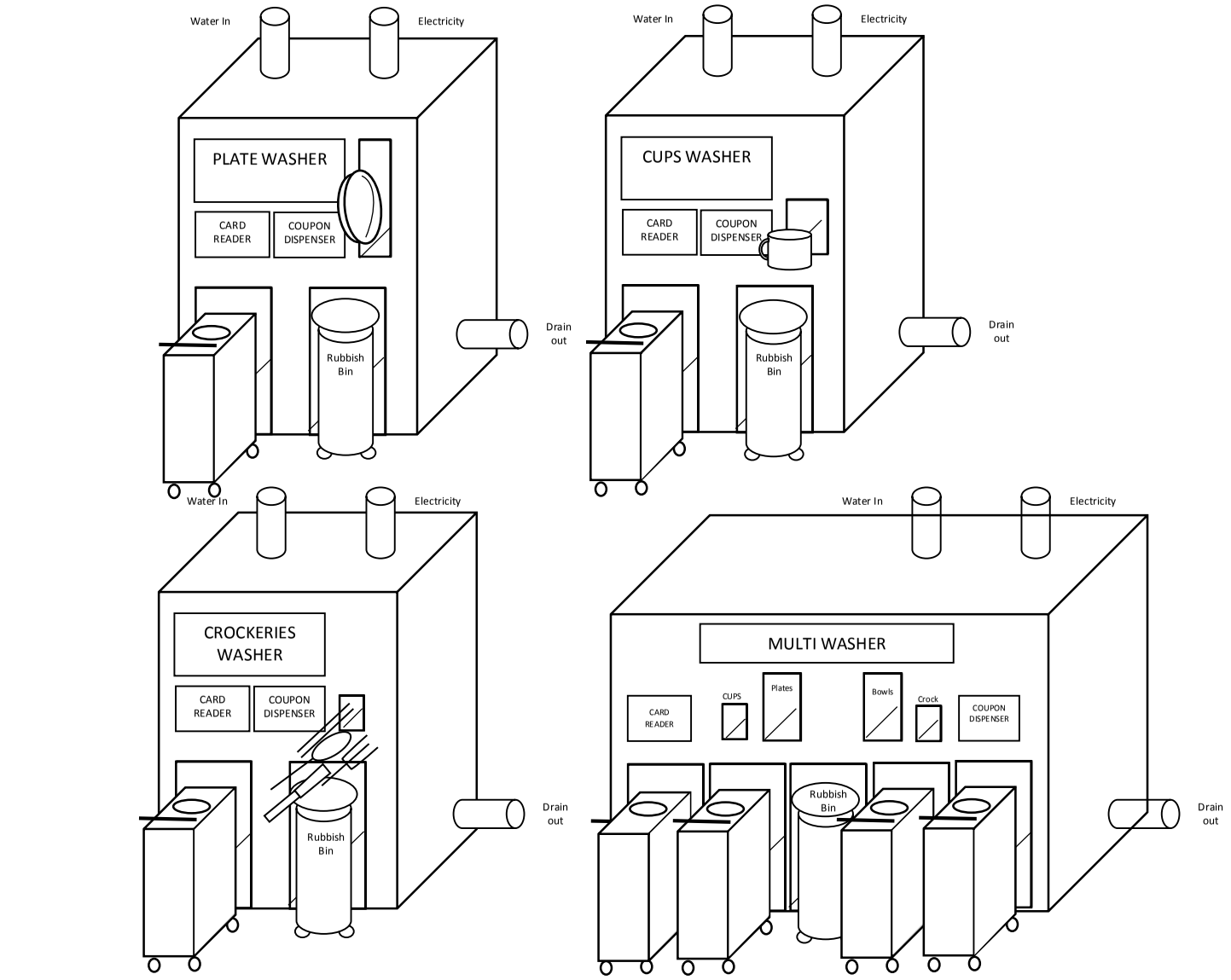
Water In
Electricity
PLATE WASHER
CARD READER
COUPON DISPENSER
Rubbish Bin
Drain out
Water In
Electricity
CUPS WASHER
CARD READER
COUPON DISPENSER
Rubbish Bin
Drain out
Water In
Electricity
CROCKERIES WASHER
CARD READER
COUPON DISPENSER
Rubbish Bin
Drain out
Water In
Electricity
MULTI WASHER
CARD READER
CUPS
Plates
Bowls
Crock
COUPON DISPENSER
Rubbish Bin
Drain out

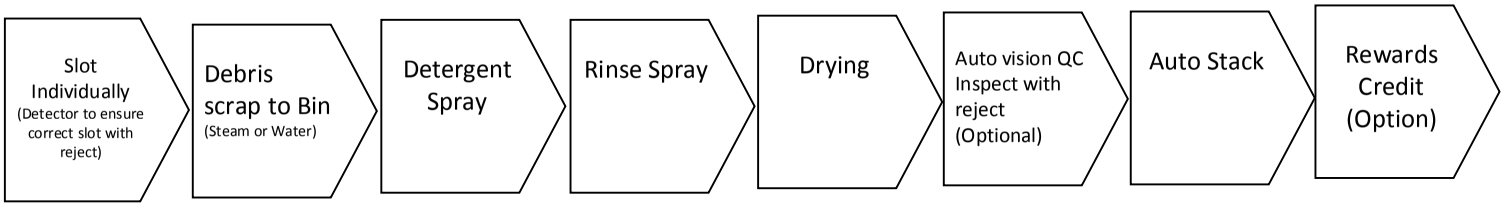
Slot Individually
(Detector to ensure correct slot with reject)
Debris scrap to Bin
(Steam or Water)
Detergent Spray
Rinse Spray
Drying
Auto vision QC Inspect with reject
(Optional)
Auto Stack
Rewards Credit
(Option)

Fig. 12