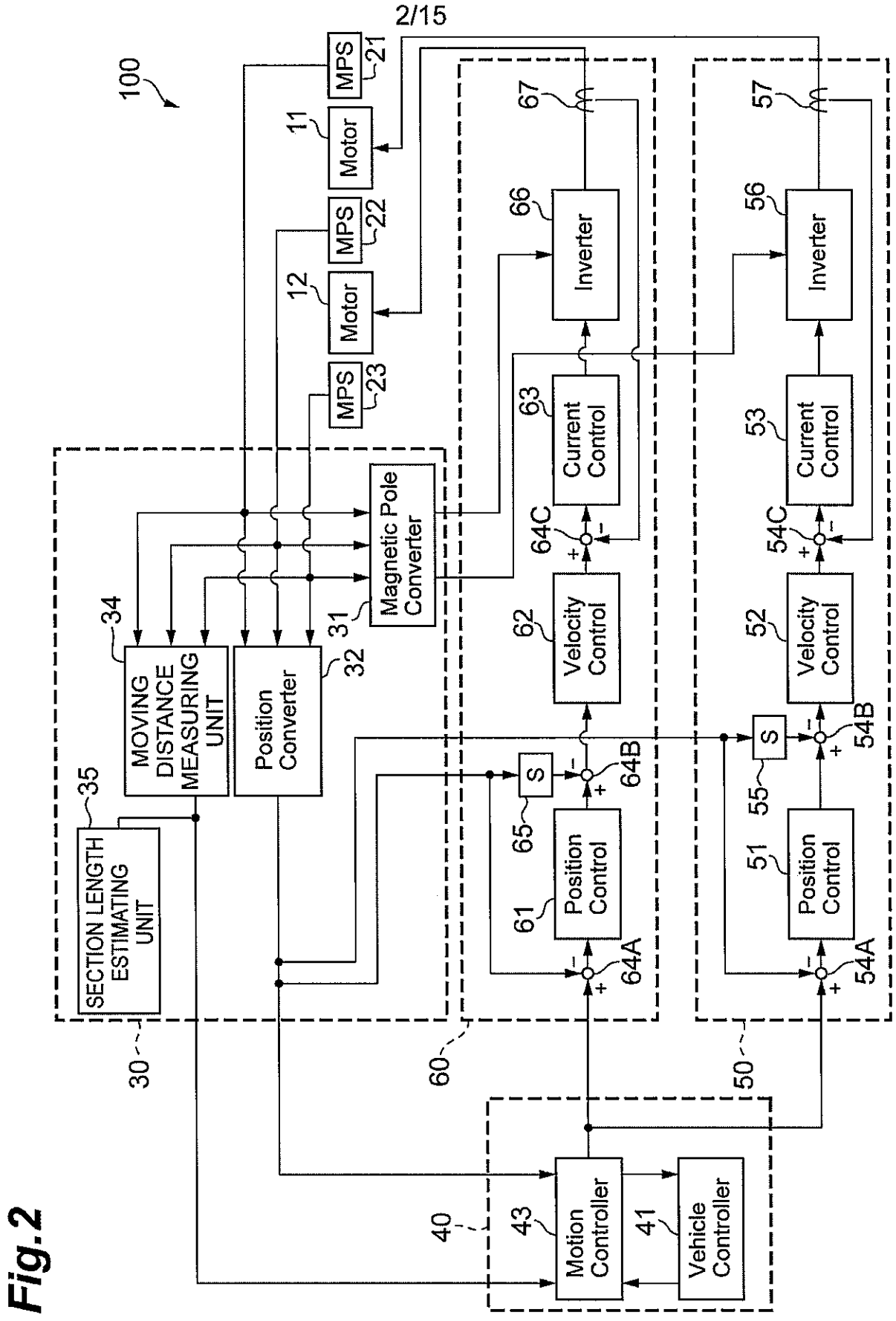
100
MPS
21
Motor
11
MPS
22
Motor
12
MPS
23
Magnetic Pole Converter
31
MOVING DISTANCE MEASURING UNIT
34
Position Converter
32
SECTION LENGTH ESTIMATING UNIT
35
30
Inverter
66
67
Current Control
63
Velocity Control
62
Position Control
61
64A
64B
64C
S
65
60
Inverter
56
57
Current Control
53
Velocity Control
52
Position Control
51
54A
54B
54C
S
55
50
Motion Controller
43
Vehicle Controller
41
40

Fig.2