(12) INTERNATIONAL APPLICATION PUBLISHED UNDER THE PATENT COOPERATION TREATY (PCT)

(19) World Intellectual Property Organization
International Bureau

(43) International Publication Date
5 August 2004 (05.08.2004)

PCT

(10) International Publication Number
WO 2004/064489 A2

(51) International Patent Classification[7]: A01D

(21) International Application Number:
PCT/IB2004/000855

(22) International Filing Date: 23 January 2004 (23.01.2004)

(25) Filing Language: English

(26) Publication Language: English

(30) Priority Data:
03/00714 23 January 2003 (23.01.2003) FR

(71) Applicant *(for all designated States except US)*: **SPEED FRANCE** [FR/FR]; Parc d'Activités d'Arnas, 53, rue de Chavanne, F-69658 Arnas Cedex (FR).

(72) Inventor; and

(75) Inventor/Applicant *(for US only)*: **LEGRAND, Emmanuel** [FR/FR]; Le Bourg, F-01480 Villeneuve (FR).

(74) Agents: **MARTIN, Jean-Jacques** et al.; Cabinet Regimbeau, 20, rue de Chazelles, F-75847 Paris Cedex 17 (FR).

(81) Designated States *(unless otherwise indicated, for every kind of national protection available)*: AE, AG, AL, AM, AT, AU, AZ, BA, BB, BG, BR, BW, BY, BZ, CA, CH, CN, CO, CR, CU, CZ, DE, DK, DM, DZ, EC, EE, EG, ES, FI, GB, GD, GE, GH, GM, HR, HU, ID, IL, IN, IS, JP, KE, KG, KP, KR, KZ, LC, LK, LR, LS, LT, LU, LV, MA, MD, MG, MK, MN, MW, MX, MZ, NA, NI, NO, NZ, OM, PG, PH, PL, PT, RO, RU, SC, SD, SE, SG, SK, SL, SY, TJ, TM, TN, TR, TT, TZ, UA, UG, US, UZ, VC, VN, YU, ZA, ZM, ZW.

(84) Designated States *(unless otherwise indicated, for every kind of regional protection available)*: ARIPO (BW, GH, GM, KE, LS, MW, MZ, SD, SL, SZ, TZ, UG, ZM, ZW), Eurasian (AM, AZ, BY, KG, KZ, MD, RU, TJ, TM), European (AT, BE, BG, CH, CY, CZ, DE, DK, EE, ES, FI, FR, GB, GR, HU, IE, IT, LU, MC, NL, PT, RO, SE, SI, SK, TR), OAPI (BF, BJ, CF, CG, CI, CM, GA, GN, GQ, GW, ML, MR, NE, SN, TD, TG).

Declaration under Rule 4.17:
— *of inventorship (Rule 4.17(iv)) for US only*

Published:
— *without international search report and to be republished upon receipt of that report*

For two-letter codes and other abbreviations, refer to the "Guidance Notes on Codes and Abbreviations" appearing at the beginning of each regular issue of the PCT Gazette.

(54) Title: A CUTTING HEAD FOR A BRUSH CUTTER, EDGE TRIMMER OR SIMILAR

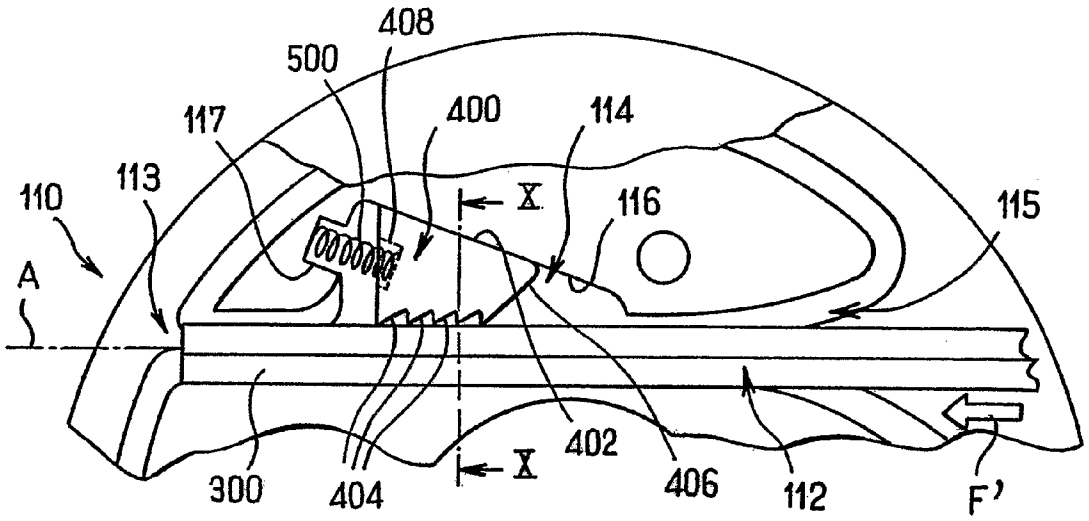

(57) Abstract: A cutting head for a brush cutter, edge trimmer or similar comprises a passageway (112) for a cutting string (300) and a mobile string locking element (400) suitable for locking the string (300) in its passageway. According to the invention, the passageway is generally offset from a central axis of the head and opens at both ends at the periphery of the head, and the locking mobile element is a one way-locking element, whereby a strand of string can be readily inserted into the passageway from a first end opening thereof and extracted from the passageway from the second end opening thereof.

WO 2004/064489 A2