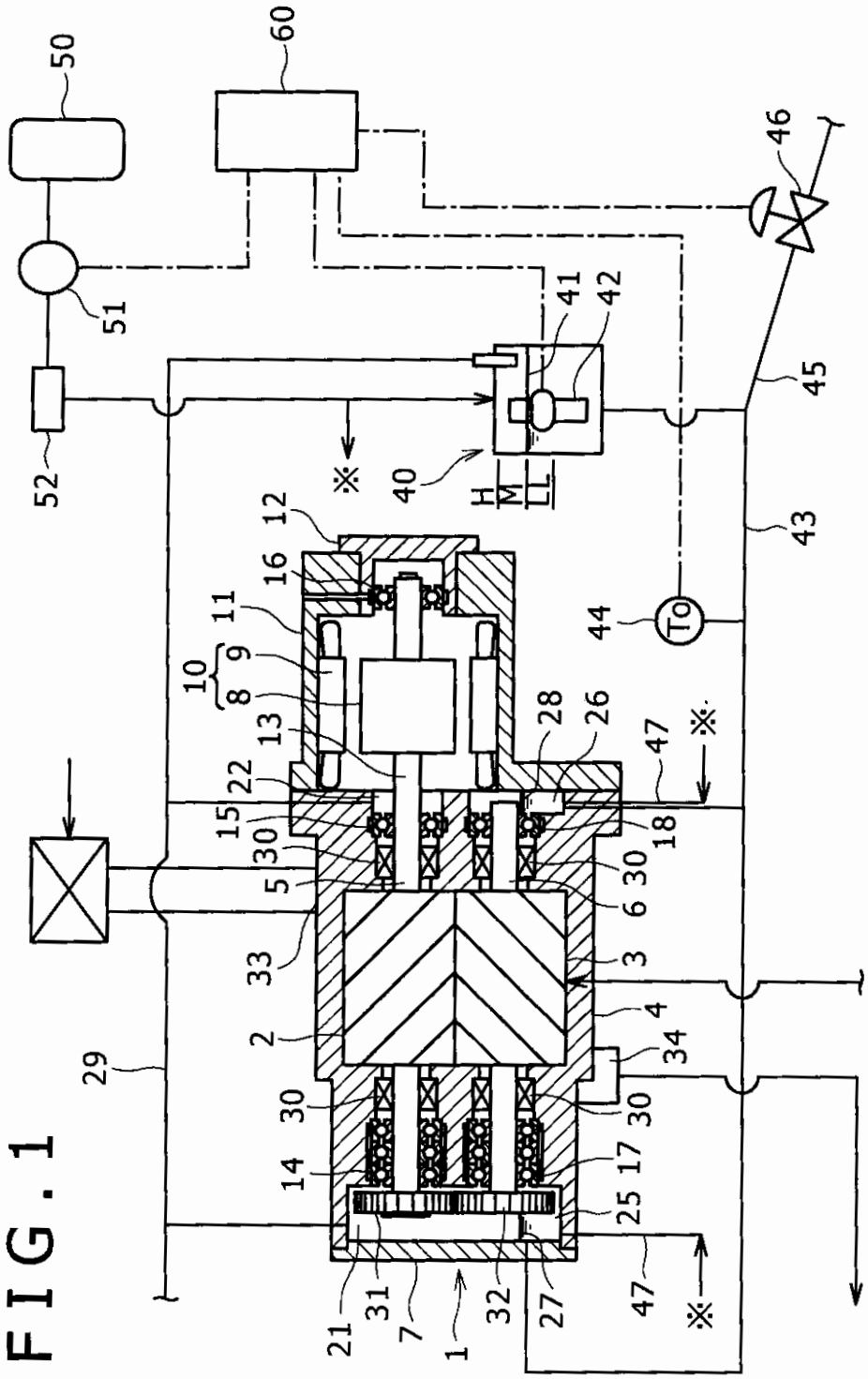
50
60
51
52
46
41
42
45
40
H
M
LL
43
12
16
11
10
9
8
13
22
15
30
5
33
2
29
30
14
21
31
7
1
32
27
47
25
17
30
34
4
3
6
30
18
47
28
26
44
To

FIG. 1

FIG. 2

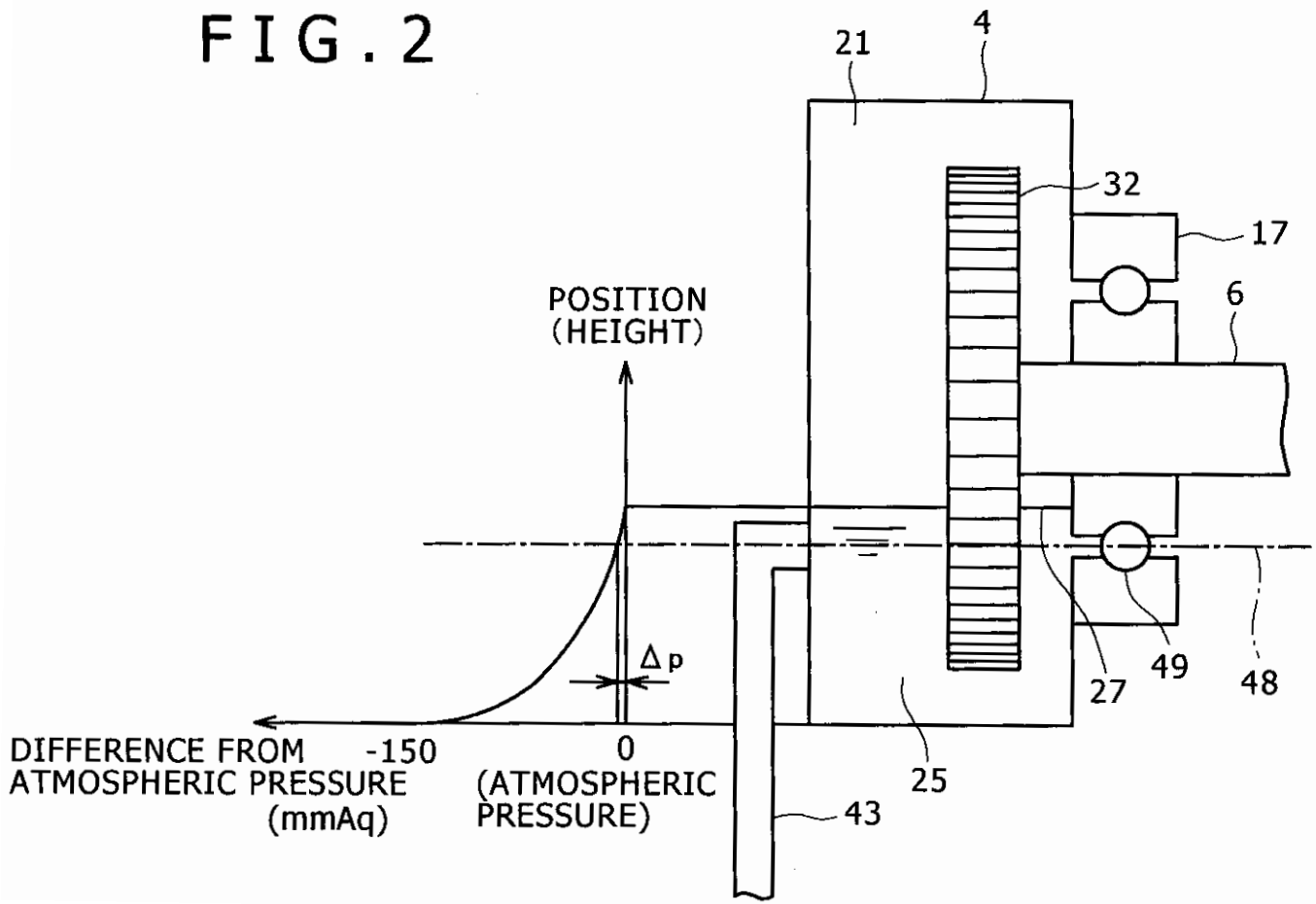
21
4
32
17
6
POSITION
(HEIGHT)
Δp
27
49
48
DIFFERENCE FROM
ATMOSPHERIC PRESSURE
(mmAq)
-150
0
(ATMOSPHERIC
PRESSURE)
25
43