

Figure 4A

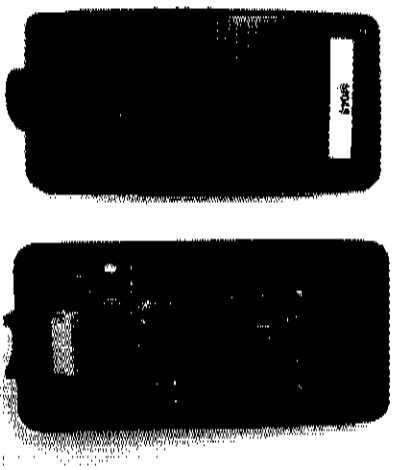

Figure 4B

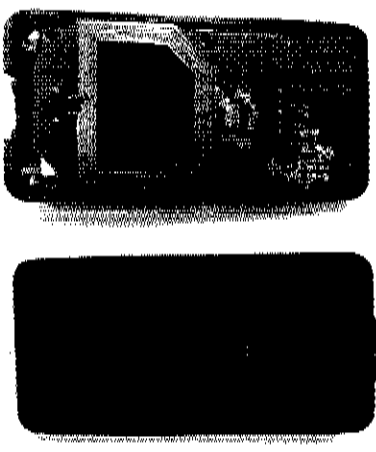

Figure 4C

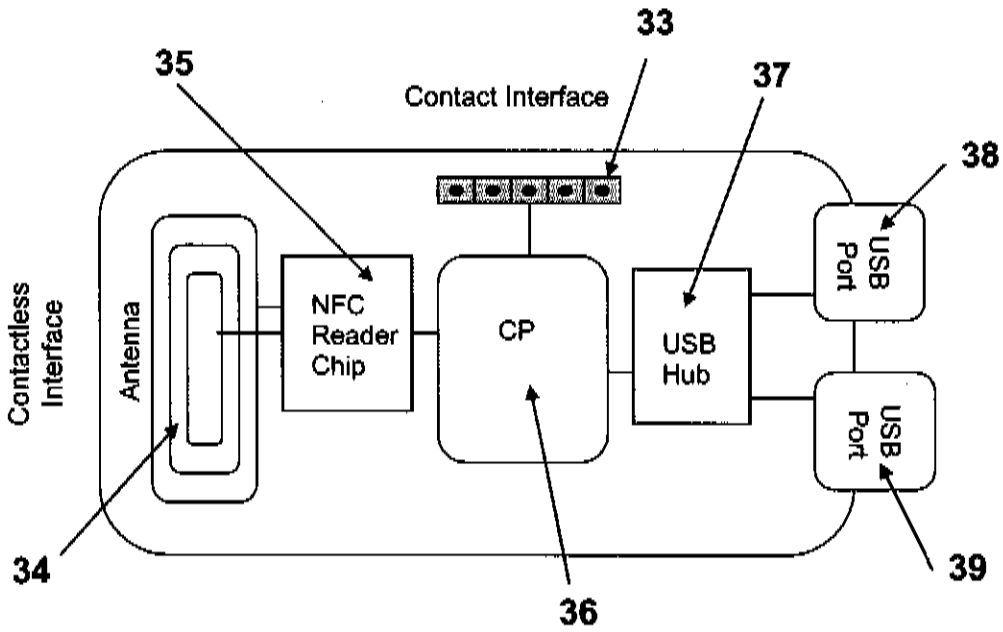
33
35
Contact Interface
37
38
Contactless Interface
Antenna
NFC Reader Chip
CP
USB Hub
USB Port
USB Port
34
36
39

Figure 5

1 October 2010

1. Background to invention

A "**dog tag**" is the informal name for the identification tags worn by military personnel, because of their resemblance to actual identity dog tag that dog owners place around the necks of their dogs.

In the military, such "dog tags" are primarily used for the identification of dead and/or wounded military personnel and these tags provide the essential yet basic medical information to aid in the treatment of the wearer (such as his or her blood type and history of inoculations).



Fig 1 - A metallic dog tag for US soldier

"Dog tags" are usually fabricated from a corrosion-resistant metal or alloy such as aluminum or stainless steel, however, during war-time these have been known to be made from all types of metals available at the time.

In the event the military personnel has a specific medical condition which requires special attention during medical treatment, an additional red tag with the pertinent information is issued and worn together with the "dog tag".

It is requirement that all military personnel have to wear their issued "dog tag" and additional red tag (if applicable) at all times when they are in the field.

Sometimes such "dog tags" may contain two copies of the same information and they can be designed to break off easily into two pieces to allow half of the said "dog tag" to be collected for notification purposes whilst the other half remains with the body should the battlefield conditions disallow the casualty to be immediately recovered.

Typically, two identical "dog tag" ("Tag") are issued to each military personnel. One Tag is worn on a long chain around the neck; the second Tag on a much smaller chain attached to the first long chain. In the event the wearer is killed during combat, the second Tag is collected and the first Tag remains with the body.

For the provision of better medical care in the field, more medical data and records are needed on the Tag. This means that a large amount of data storage is needed, but the traditional Tag does not have any data storage capacity.

The traditional metallic Tag is unable to hold large amounts of critical medical information/data due to its limited size and surface area.

Another problem posed by the use of a traditional metallic Tag is in the scenario where a soldier gets killed in the field during combat, normally one of the 2 traditional metallic Tag is put into the deceased mouth. However, the difficulty occurs when the dead body stiffens and the nerve around the mouth of the deceased cannot be easily opened to retrieve the said Tag. This makes the task of identifying each corpse difficult as the metallic Tag must be retrieved to identify the wearer.

To overcome these limitations, the Applicant has conceptualized the making and design of an Electronic Tag which has unique capabilities and functionalities:

(a) a contact and contactless read and write feature for real time, easy retrieval of critical medical information/data from the Electronic Tag and identification purposes (*);

(b) a rewritable feature which allows for continued easy management of the information/data contained in the Electronic Tag;

(c) a data storage capacity which is not available in the traditional Tag;

(d) capacity to store large amounts of information/data in one device (Electronic Tag), replacing the redundancy of having 2 traditional metallic Tags.

(*) To address the identification problem, the Electronic Tag allows for a contactless reading by simply placing the contactless reader over the mouth of the deceased, the identification of the party can be easily read and the need to pry open the mouth of the deceased will no longer be necessary.

Design of the Electronic Tag ("WEI Tag"):

To design the architecture of the Electronic Tag, the Applicant has used, integrated and applied multi-discipline technologies. Firstly, it had to design various circuits, then integrate each one into the other by using embedded electronics circuits. Below is a simplified diagram of the Electronic Tag where the contact and contactless interface are clearly shown.

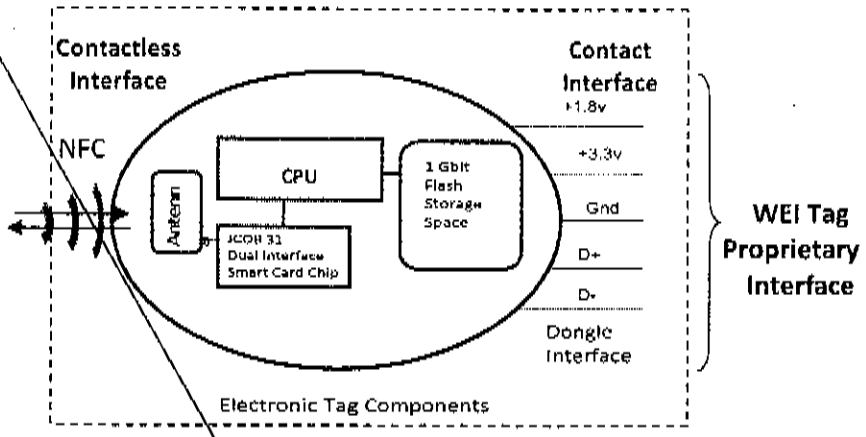

2. Contactless Reading

We had applied the Near Field Communication (NFC) to tap on its unique over the air communication capabilities. Secured "over the air" protocol allows for data confidentiality while its peer to peer data exchange feature can be further exploited to offer new operational experiences. The contactless read range is designed to be the same as NFC maximum read range of 3cm. The contactless interface conforms to ISO 14443 standard and operates at 13.56MHz. To avoid the need to do prolong contactless reading (i.e. long reading time), the data storage for the contactless reading is kept small and capped at the range of 20Kbits to 30Kbits.

When the Electronic Tag is worn around the neck and loosely hung around the front of the wearer's chest, the said tag has a tendency to flip over front and back during movement. As such, there is a need for contactless reading from either side of the Electronic Tag.

To achieve this contactless reading from either side of the said tag, different layout designs of the PCB were fabricated and tested. The current design allows for a reading range of 3cm from either and both sides of the tag.

Different antenna pattern designs to meet read range requirements

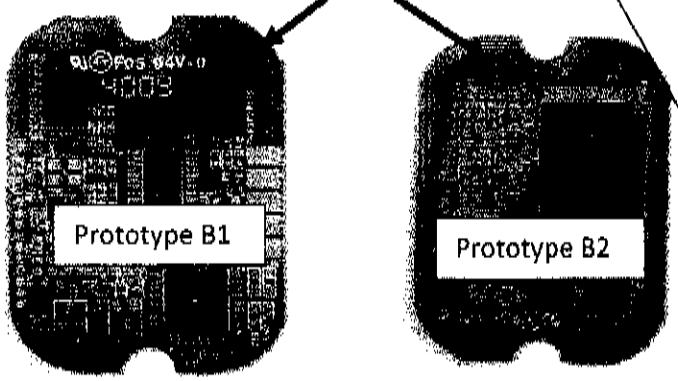

3. Contact Reading

We had designed the embedded CPU circuits to incorporate large storage capacity NAND flash memory chip to provide a sufficiently large storage capacity to store all relevant medical records needed by wearer. The storage capacity can be scaled in multiples of Gigabites depending on the storage needs. Currently, the prototype tag incorporates 128 Mbytes of storage space.

The embedded CPU is also connected so that it is able to assess the data stored in the memory area of the contactless section too. When the contact sector of the said tag is powered up (by slotting the tag into the socket of the reader), the use of the unique interface technique allows the embedded CPU to exchange data between the contactless data storage sector and contact data storage sector, and vice versa

When the contact sector is not powered up, the design of the electronic circuit still allows the contactless sector to operate independently, without disruption. Without electrical power, the Electronic Tag functions as a passive secured RFID tag.

To further enhance the design of the Electronic Tag, the embedded CPU sector is also designed to handle and manage information assurance (IA) to ensure confidentiality of data stored within the Electronic Tag.

4. Visual Reading

The Electronic Tag housing unit is made of plastic materials friendly to the human skin. The housing unit surface is designed to incorporate information like the wearer's name, grouping, etc. This can be easily etched on the surface by laser etching/engraving.

In summary the 3-in-1 design of the Electronic Tag permits visual reading, contact and contactless identification as well as the derivation of a new unique electronic platform.

The working prototype of the Electronic Tag is as shown below together with artist impression of a version of a WEI Tag reader.

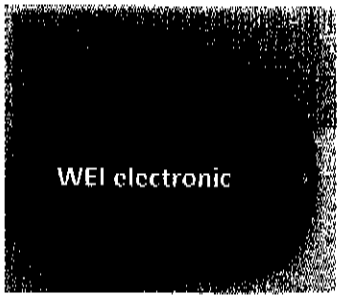

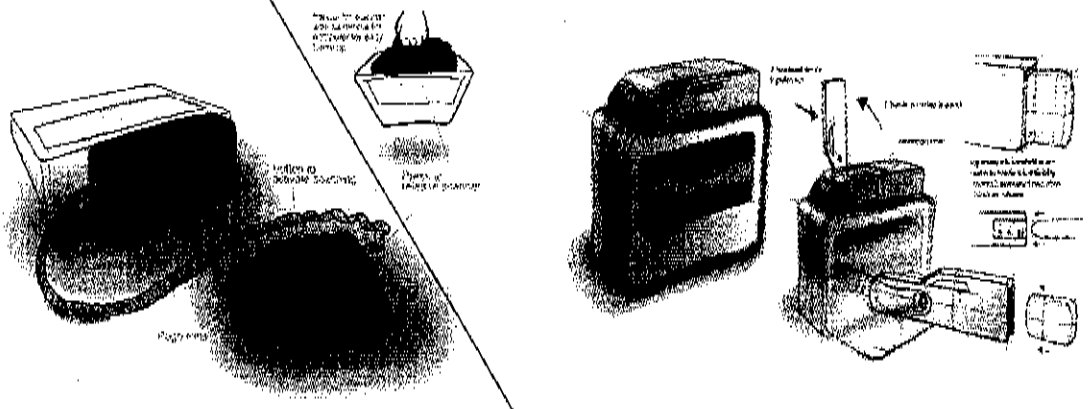

Conceptual design of WEI readers

5. Electronic/WEI Tag Specification

S/No	Features	Specifications
1.	**Identification method**	Visual – Laser engraving on face of tag
		Contactless both sides- ISO 14443 Standards
		Read range = 3cm (max)
		Contact – WEI proprietary interface
2.	**Data storage Capacity**	Contactless – 20Kbits
		Contact – 128Mbytes
		Both memories protected by encryption
3.	**Data type**	Data, Audio, video
4.	**Weight**	Approximately 10 g

5.	**Environmental**	
	Storage Temperature	-20°C to 120 °C
	Operating Temperature	-20°C to 85 °C
	Water Ingress	IP 68 up to 2 meter
	ESD	Up to 15KV @ 20 pulses/sec

6. Assessment of Technologies used by others (off the shelf products)

Below is a table showing the technologies applied in WEI Tag architecture where some components of these technologies are found in other products in the market place. However, none of the available products contain all of the technologies comprised in the WEI Tag. There is therefore no identical or closely similar product resembling the WEI Tag architecture available. Most of the products may contain a USB thumb drive or a contactless chip card, but these are all standalone applications and have limited functionality to offer to the user.

Technology / **Application**			
E-pay on phone	✓	✓	
Contact reader	✓		✓
Contactless reader		✓	✓
Payment	✓		
WEI	✓	✓	✓

The Applicant anticipate future enhancements to the current prototype was developed which could include:

a. miniaturization of the Tag to reduce its size and weight; or

b. the hardening of the exterior unit using materials such as ceramic that can withstand higher temperatures of 200°C or more.

In addition, the application of the WEI electronic tag can be extended to be applied to:

- Secure authentication token
- Secured miniature virtual computing platform