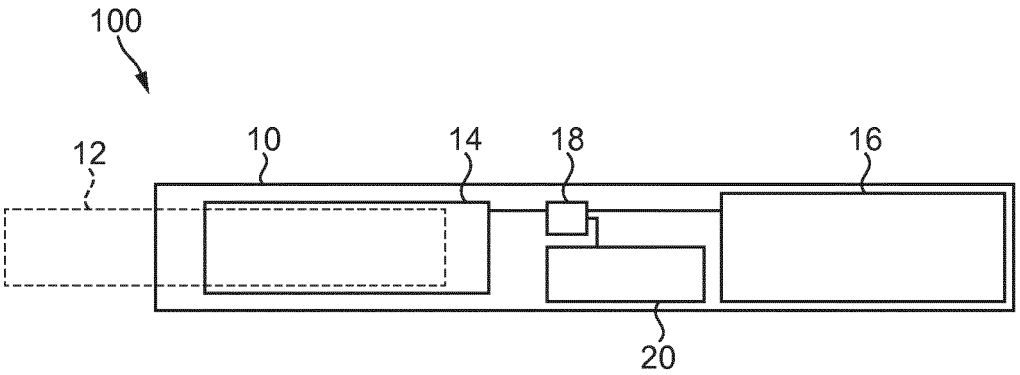

FIG. 1

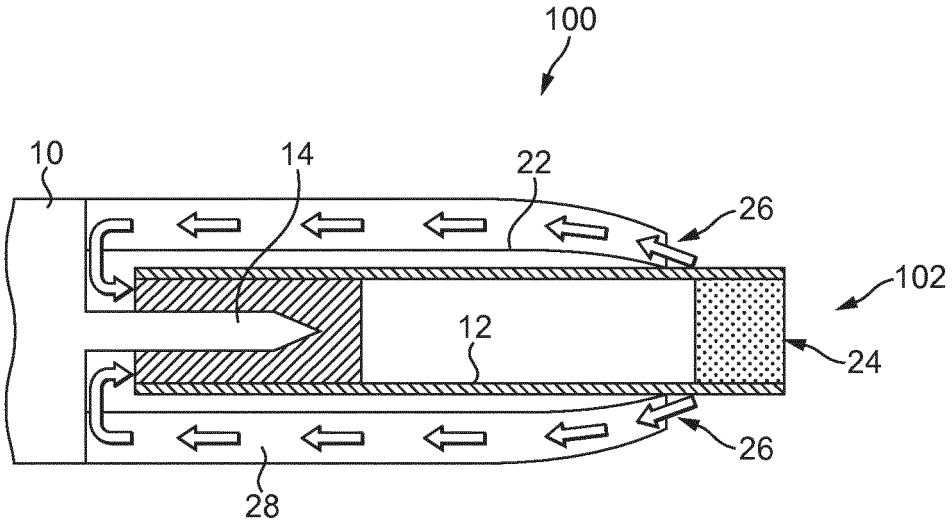

FIG. 2

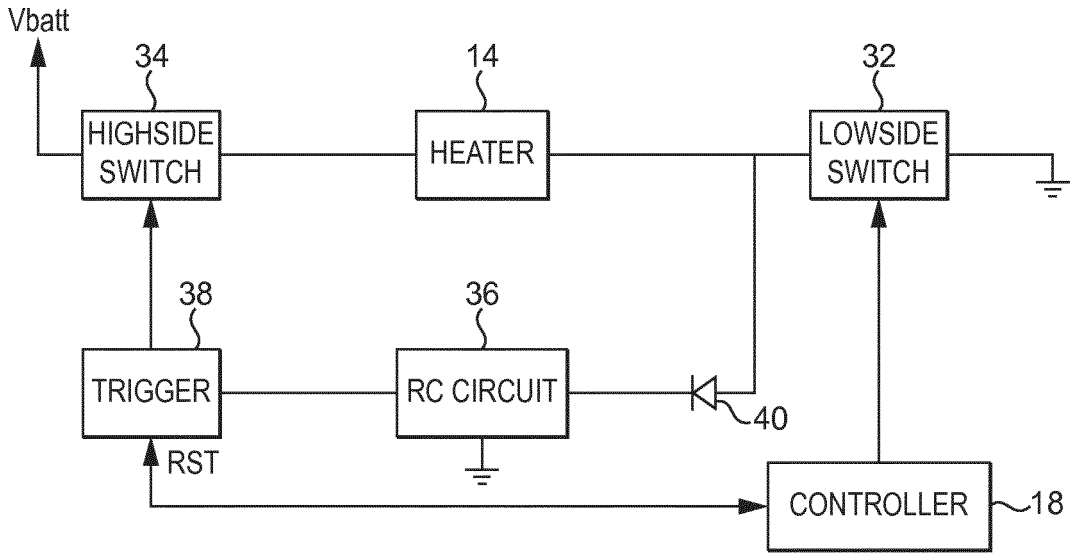
Vbatt
34
HIGHSIDE SWITCH
14
HEATER
32
LOWSIDE SWITCH
38
TRIGGER
36
RC CIRCUIT
40
RST
CONTROLLER
18

FIG. 3

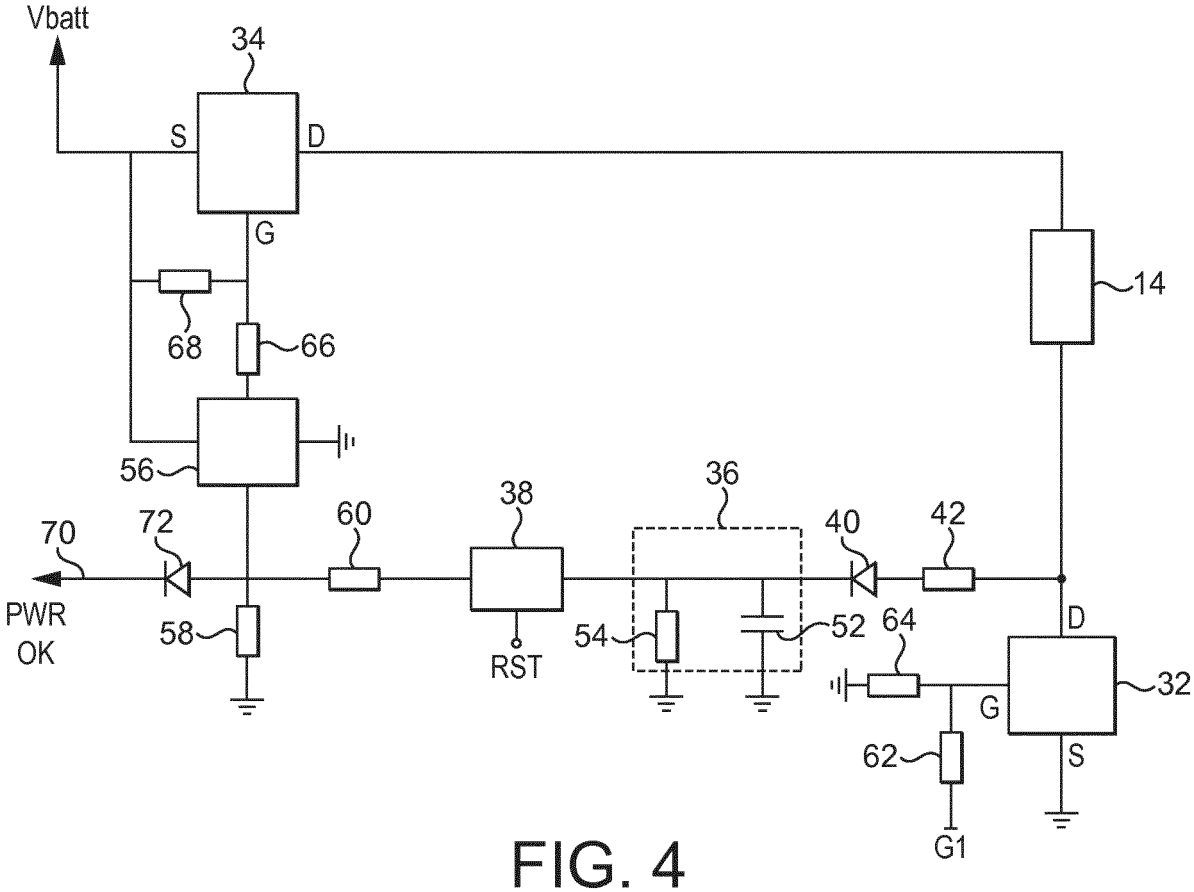
Vbatt
34
S
D
G
14
68
66
56
36
38
70
72
60
40
42
PWR OK
58
RST
54
52
64
D
32
G
62
S
G1

FIG. 4