FIG.1

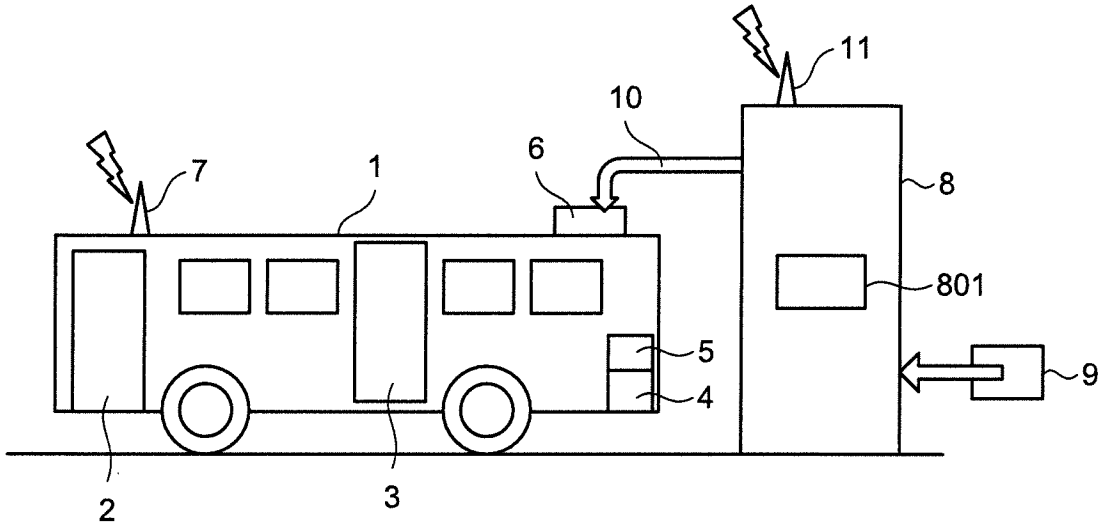
11
10
7
1
6
8
801
5
9
4
2
3

FIG.2

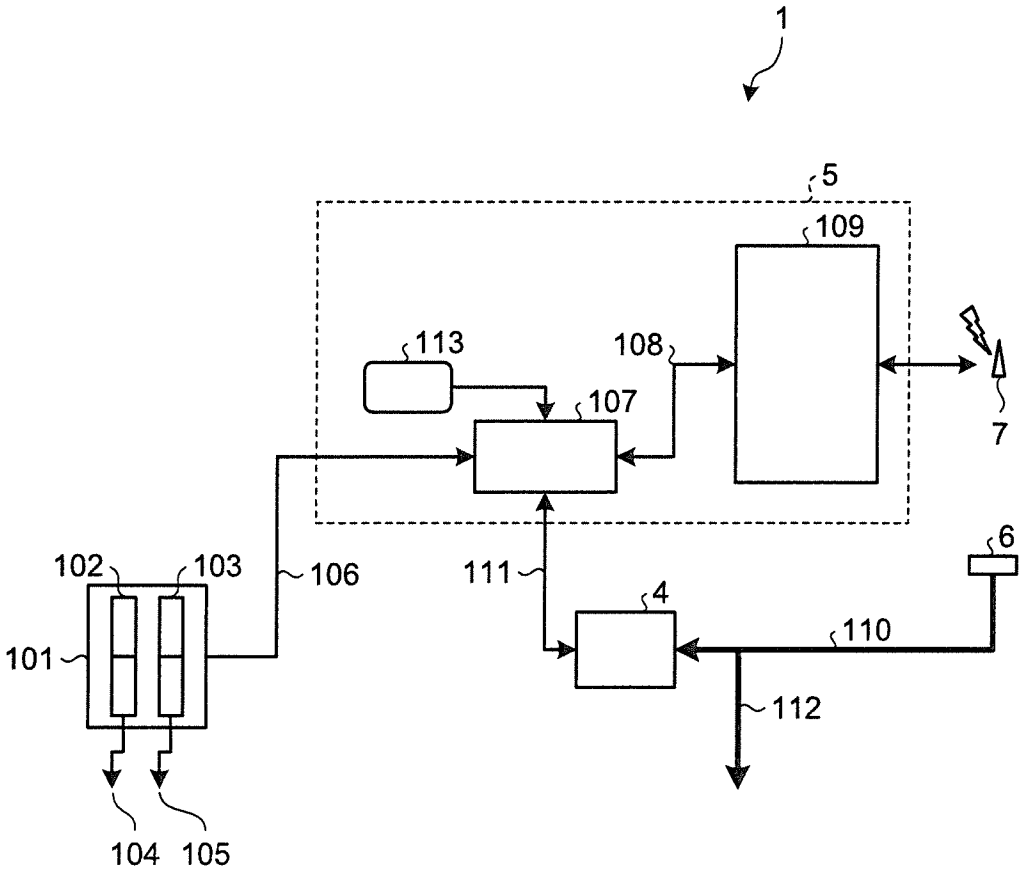
1
5
109
113
108
107
7
6
102
103
106
111
4
101
110
112
104
105

FIG.3

DOOR 2	DOOR 3	CHARGING CONTROL
EITHER OR BOTH OPENED		START CHARGING
BOTH CLOSED		STOP CHARGING

FIG.4

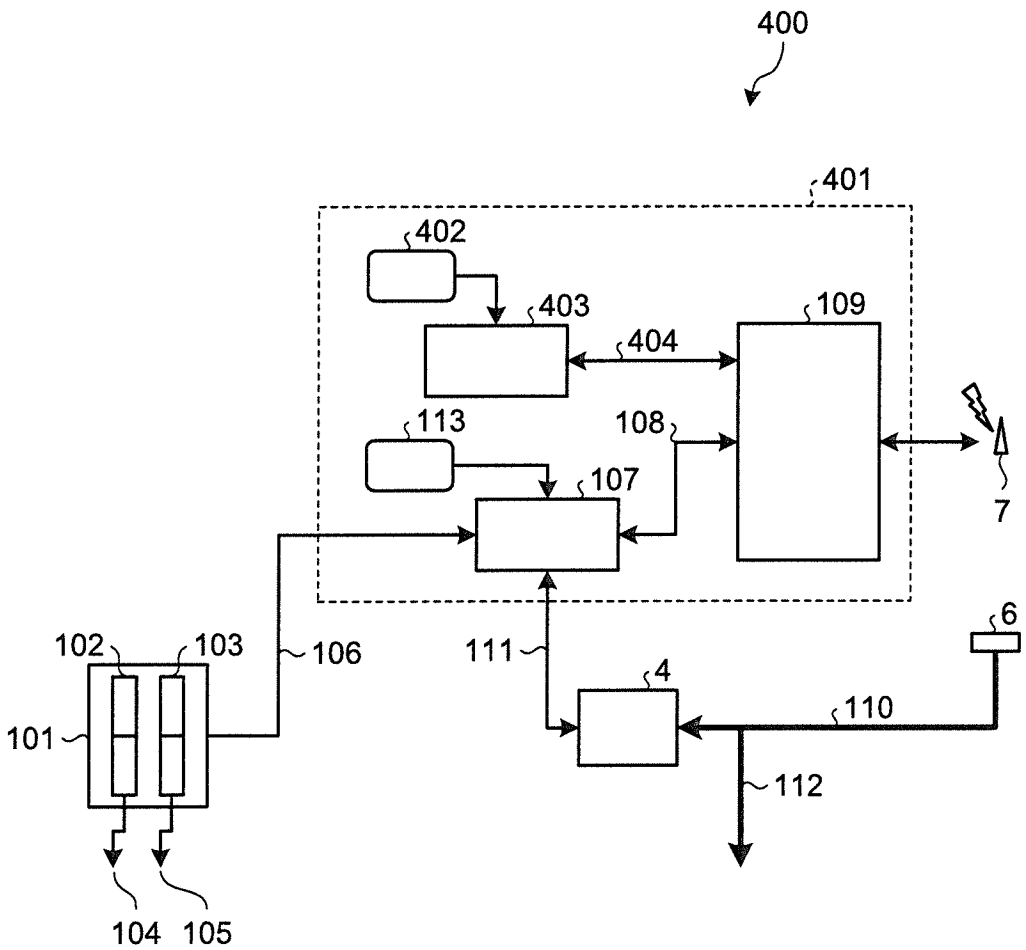

FIG.5

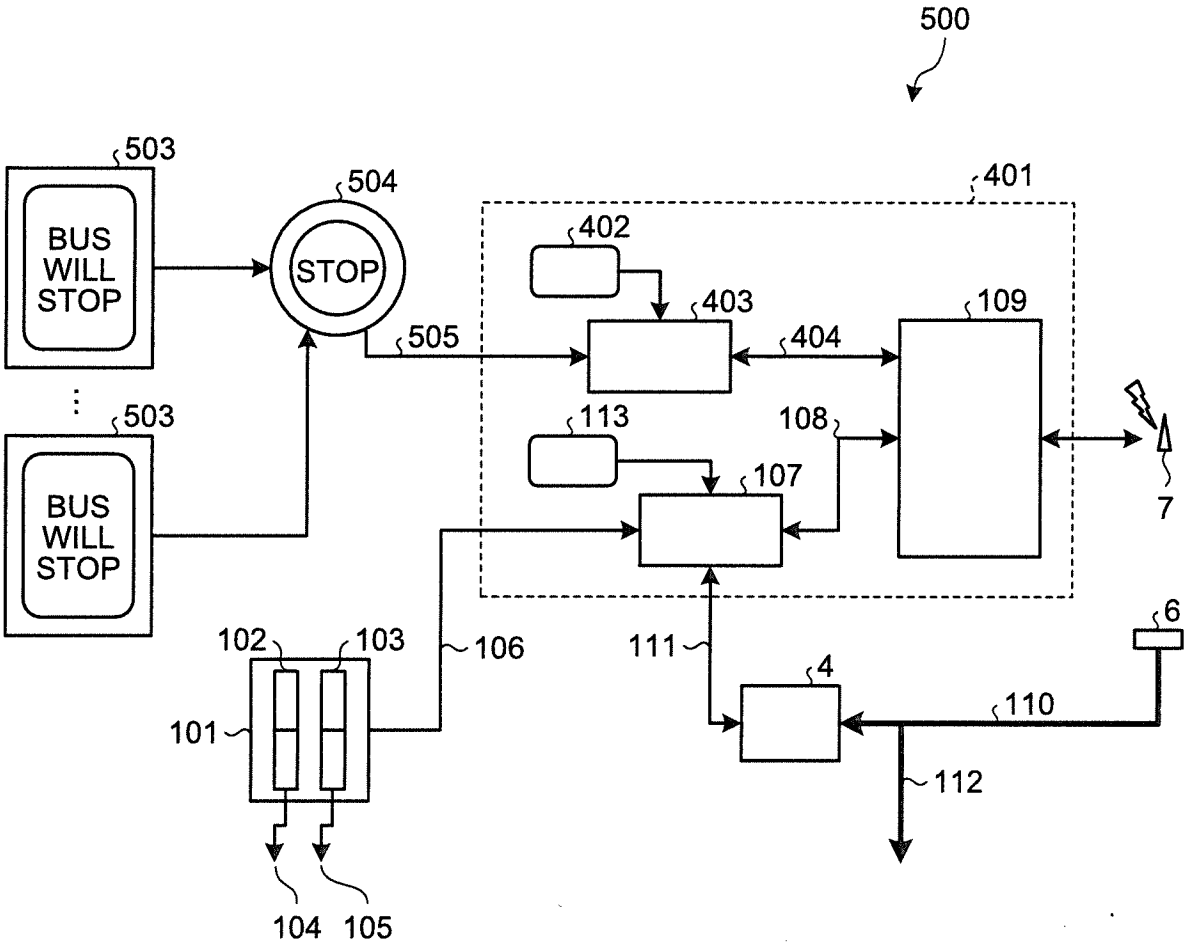
500
503
BUS WILL STOP
504
STOP
505
401
402
403
404
109
503
BUS WILL STOP
113
108
107
7
6
102
103
106
111
4
110
101
112
104
105

FIG.6

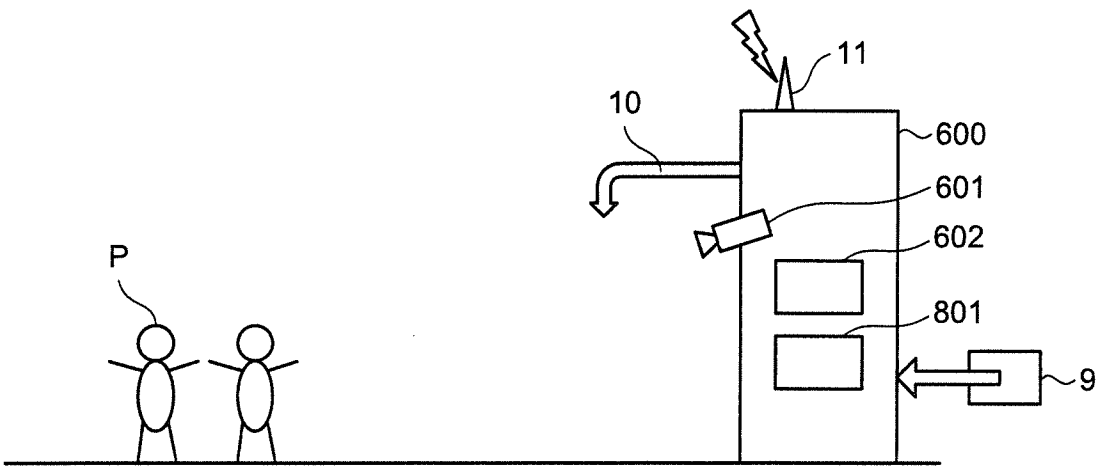
11
10
600
601
602
801
9
P

FIG.7

