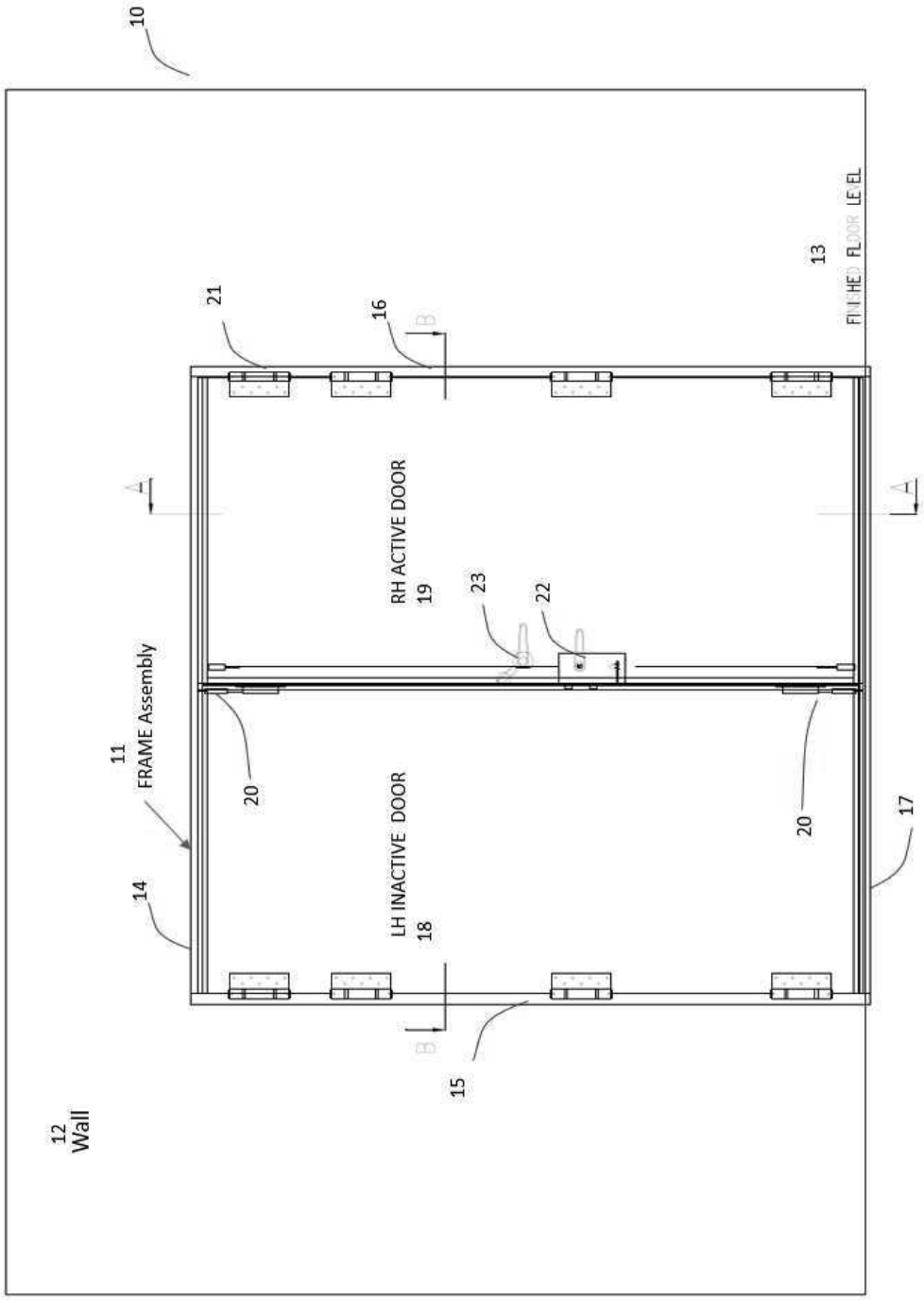
10
12
Wall
11
FRAME Assembly
14
15
16
17
18
LH INACTIVE DOOR
19
RH ACTIVE DOOR
20
20
21
22
23
13
FINISHED FLOOR LEVEL
A
A
B
B

Figure 1

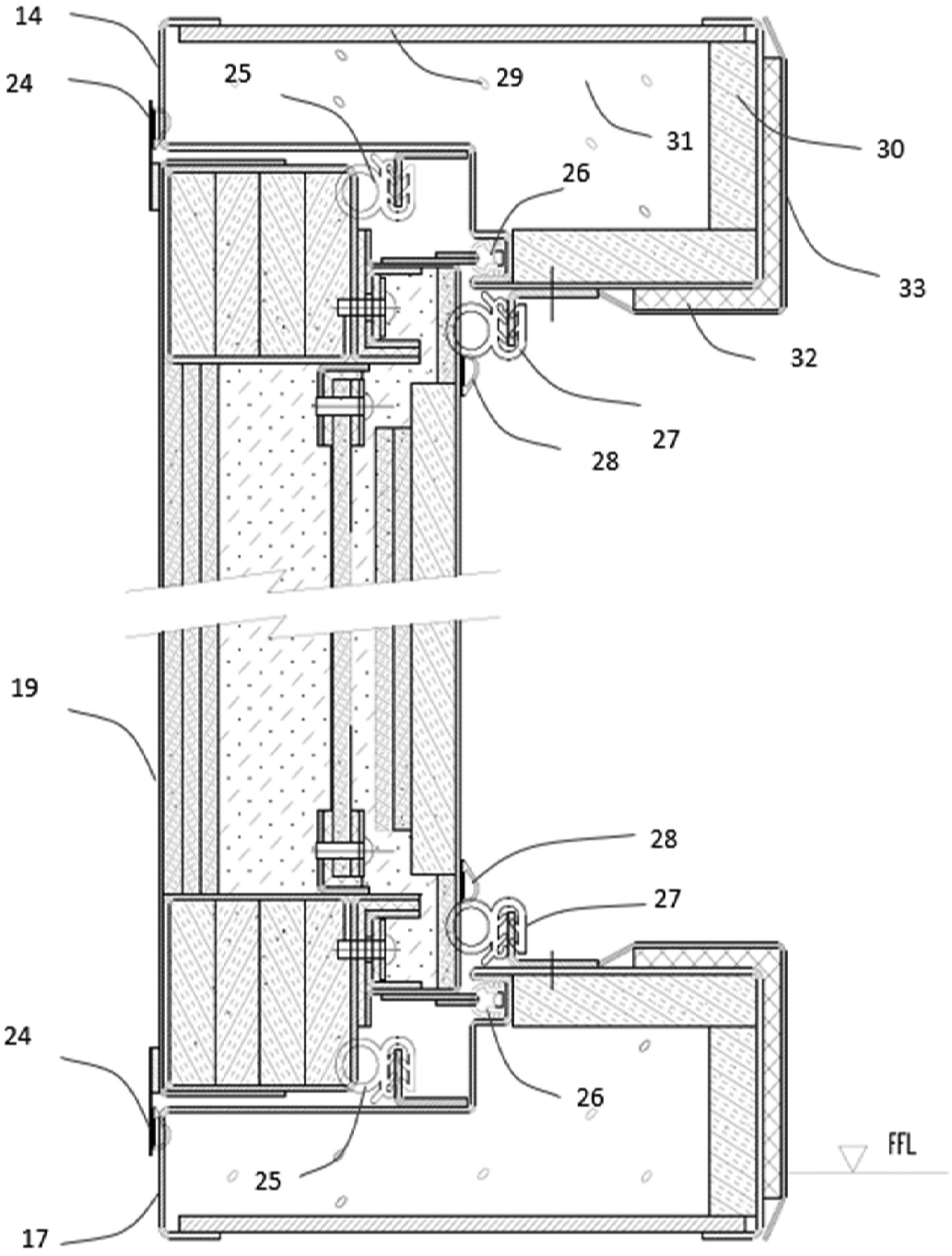

Figure 2

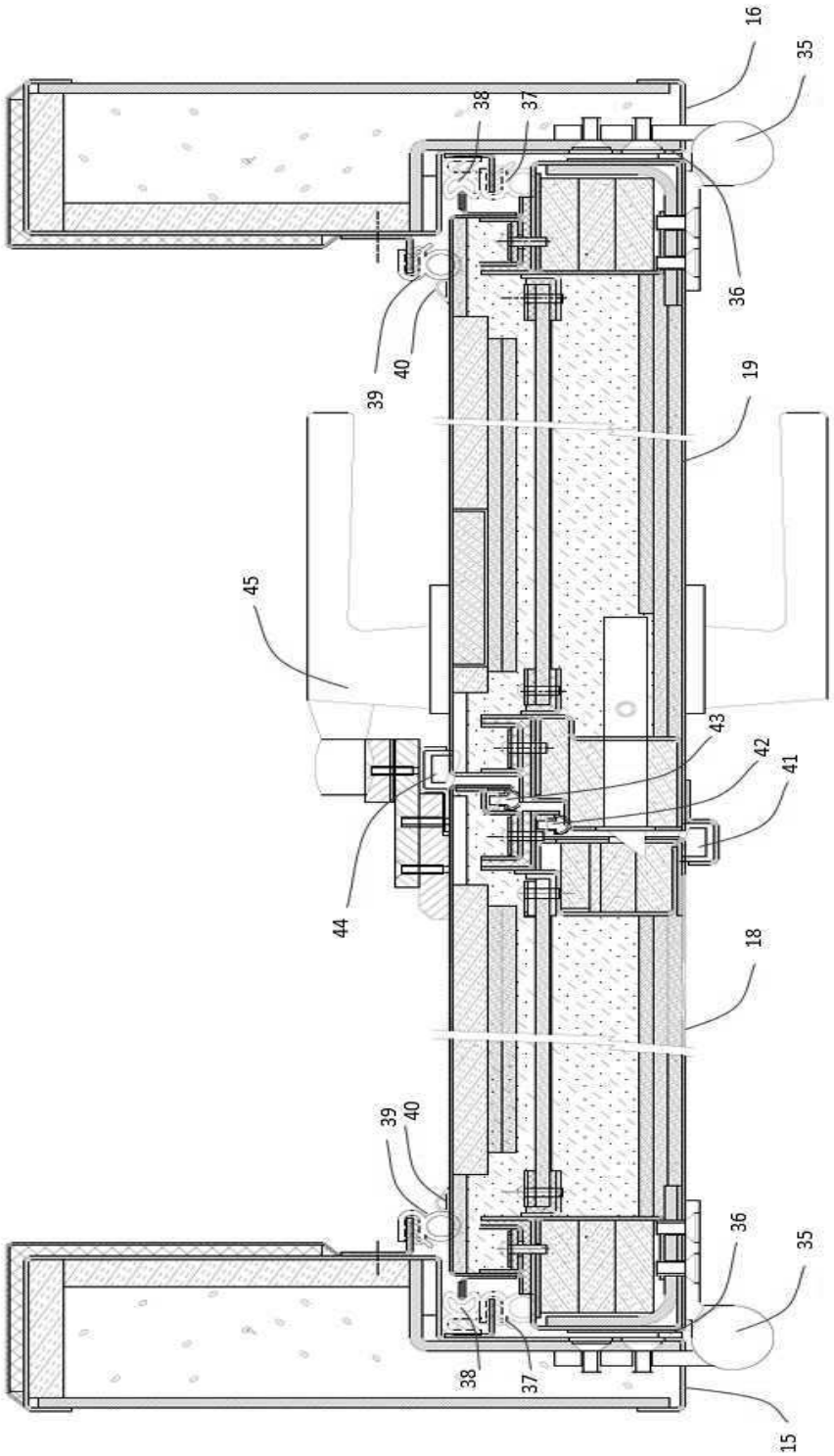

Figure 3

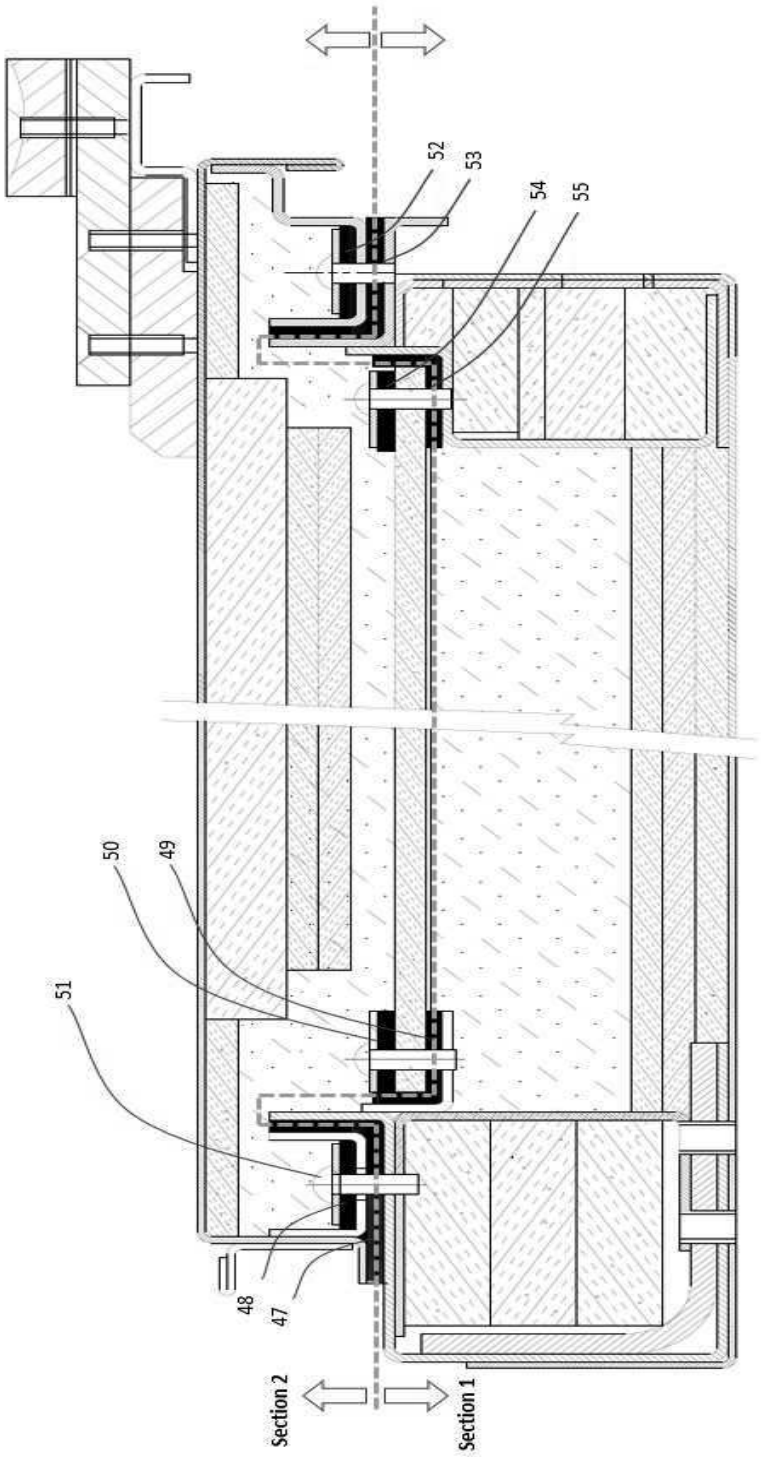

Figure 4

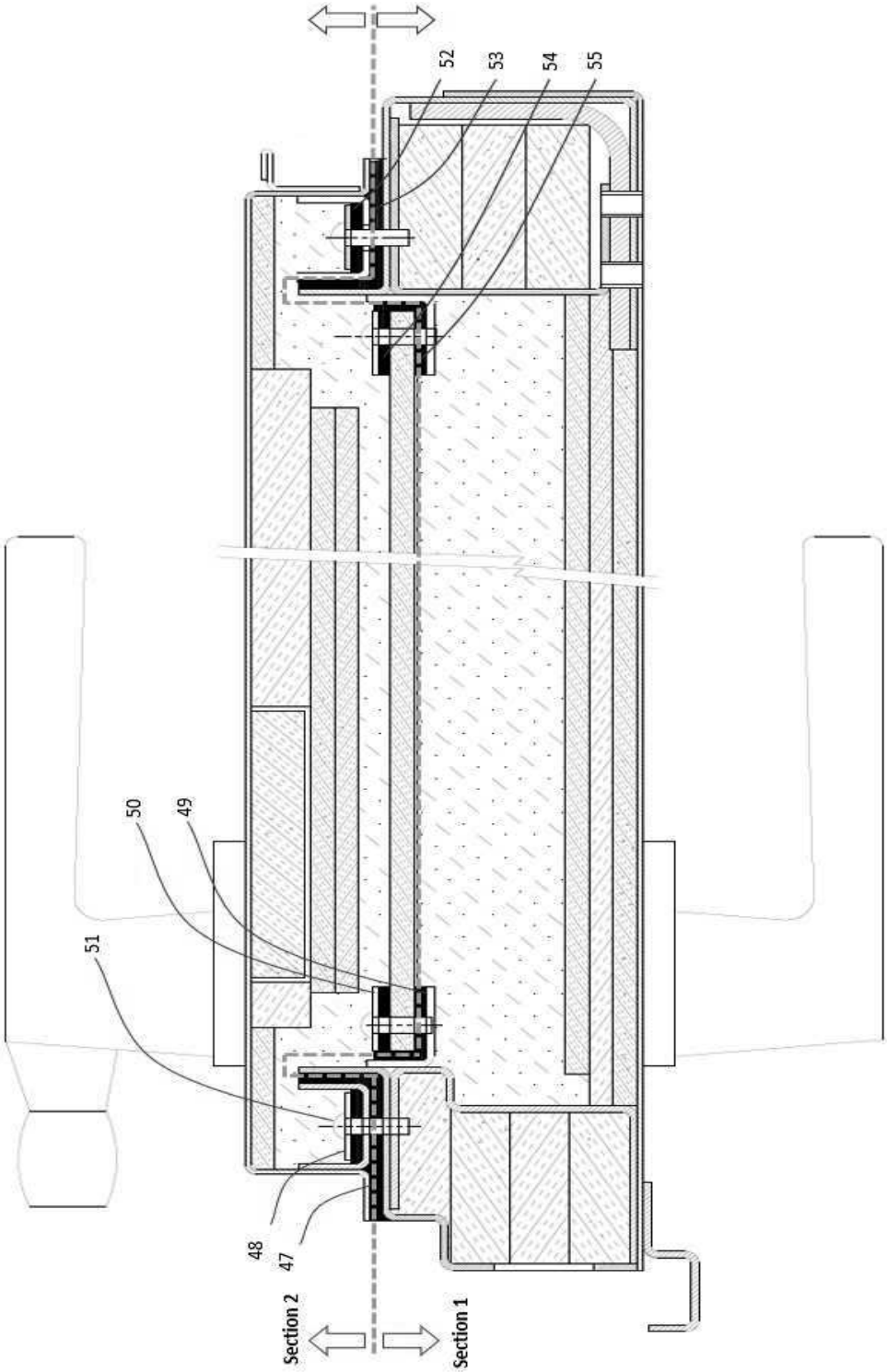

Figure 5

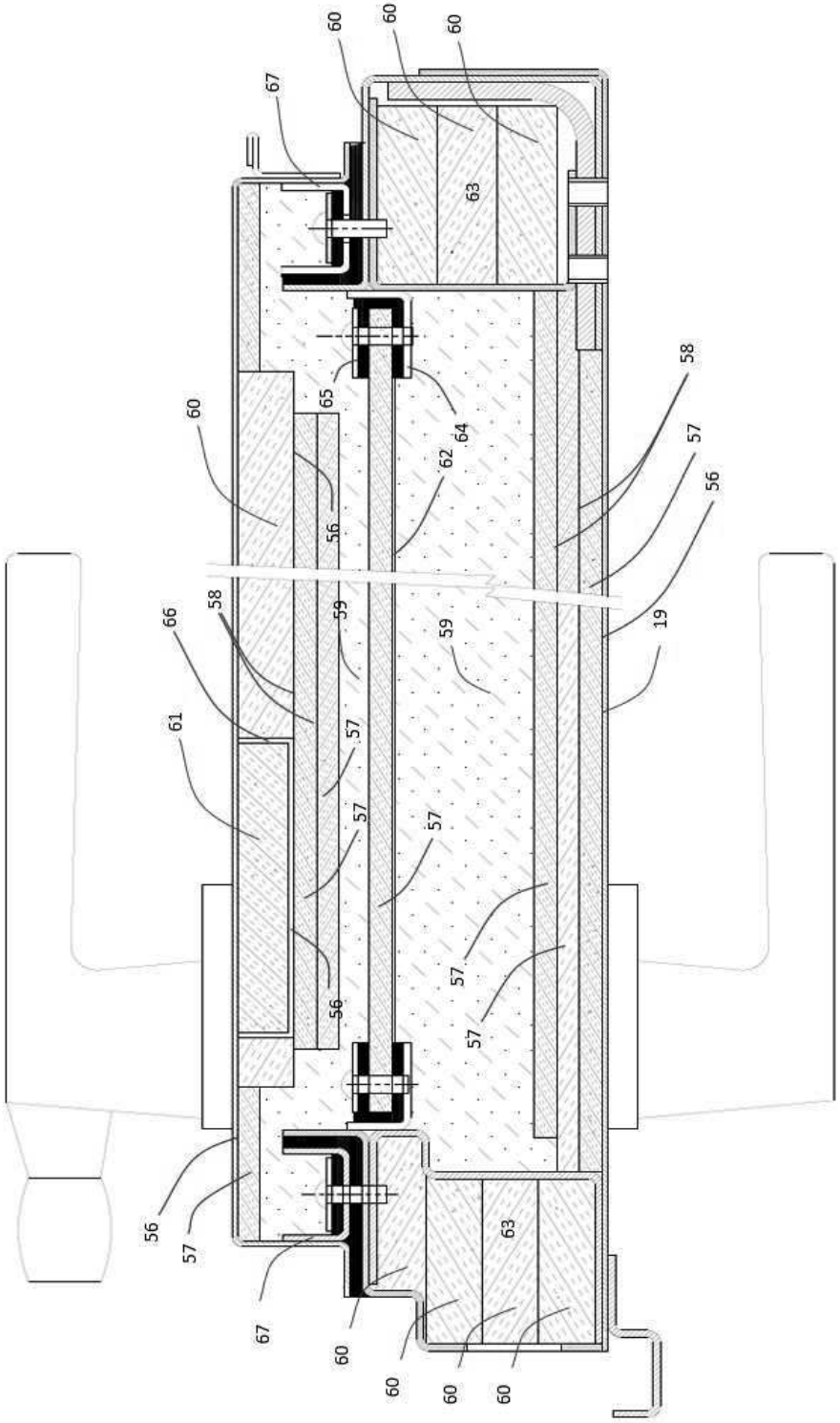
60
60
60
67
63
58
65
64
60
62
57
56
56
66
58
59
59
19
61
57
57
57
57
57
56
56
57
63
67
60
60
60
60

Figure 6