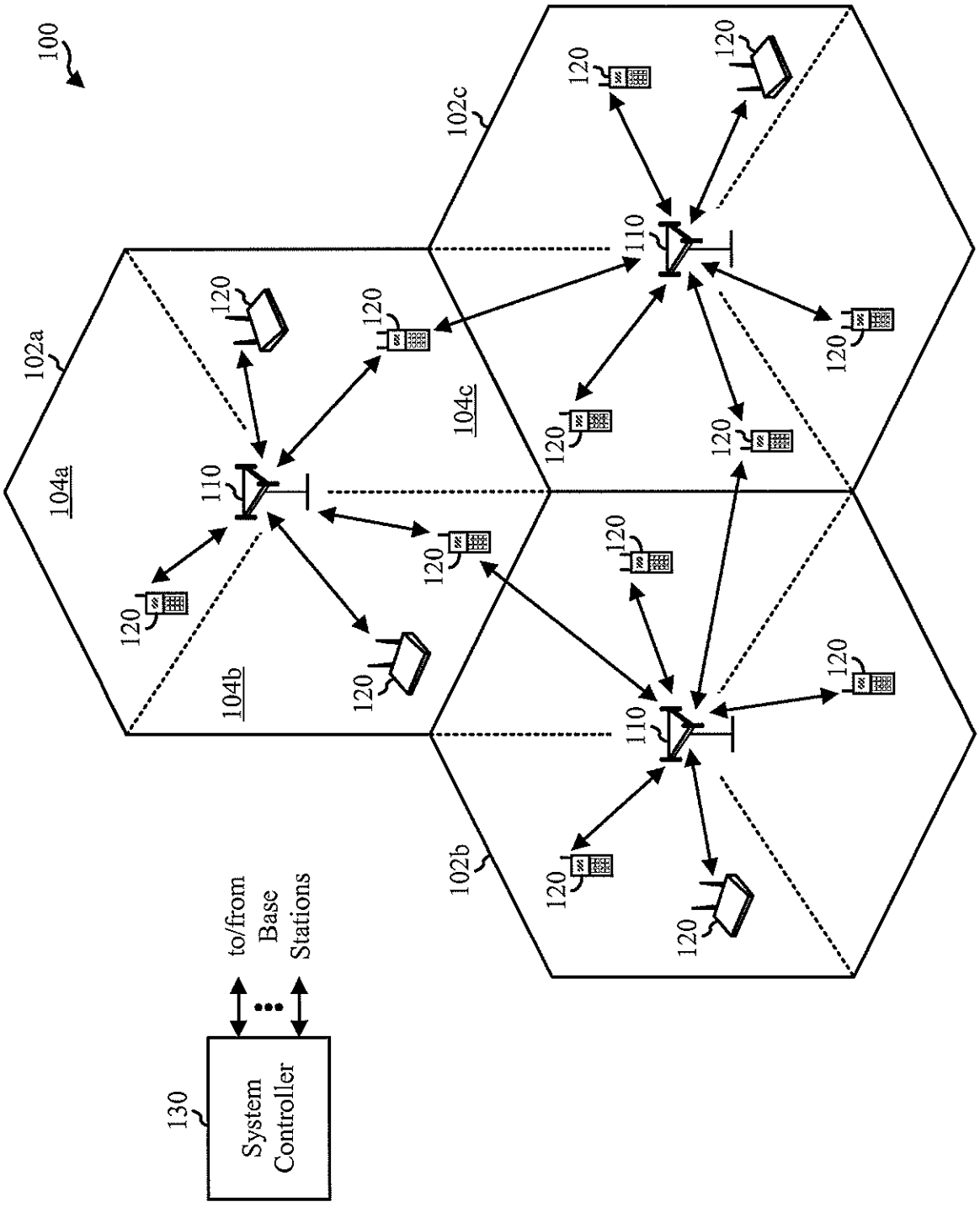
100
102a
102b
102c
104a
104b
104c
110
120
130
System Controller
to/from Base Stations

FIG. 1

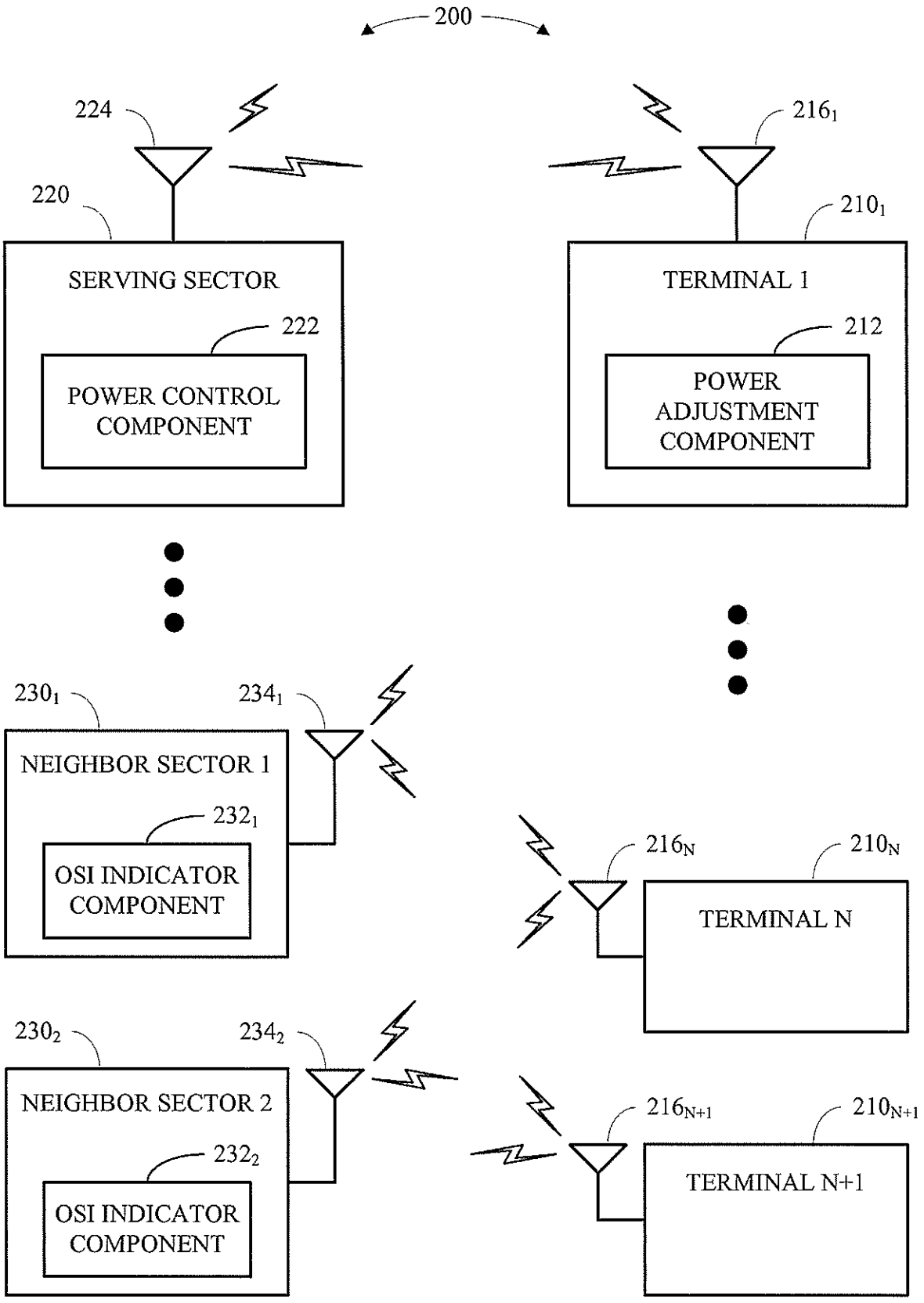
200
224
220
SERVING SECTOR
222
POWER CONTROL COMPONENT
216_1
210_1
TERMINAL 1
212
POWER ADJUSTMENT COMPONENT
230_1
234_1
NEIGHBOR SECTOR 1
232_1
OSI INDICATOR COMPONENT
216_N
210_N
TERMINAL N
230_2
234_2
NEIGHBOR SECTOR 2
232_2
OSI INDICATOR COMPONENT
216_{N+1}
210_{N+1}
TERMINAL N+1

FIG. 2

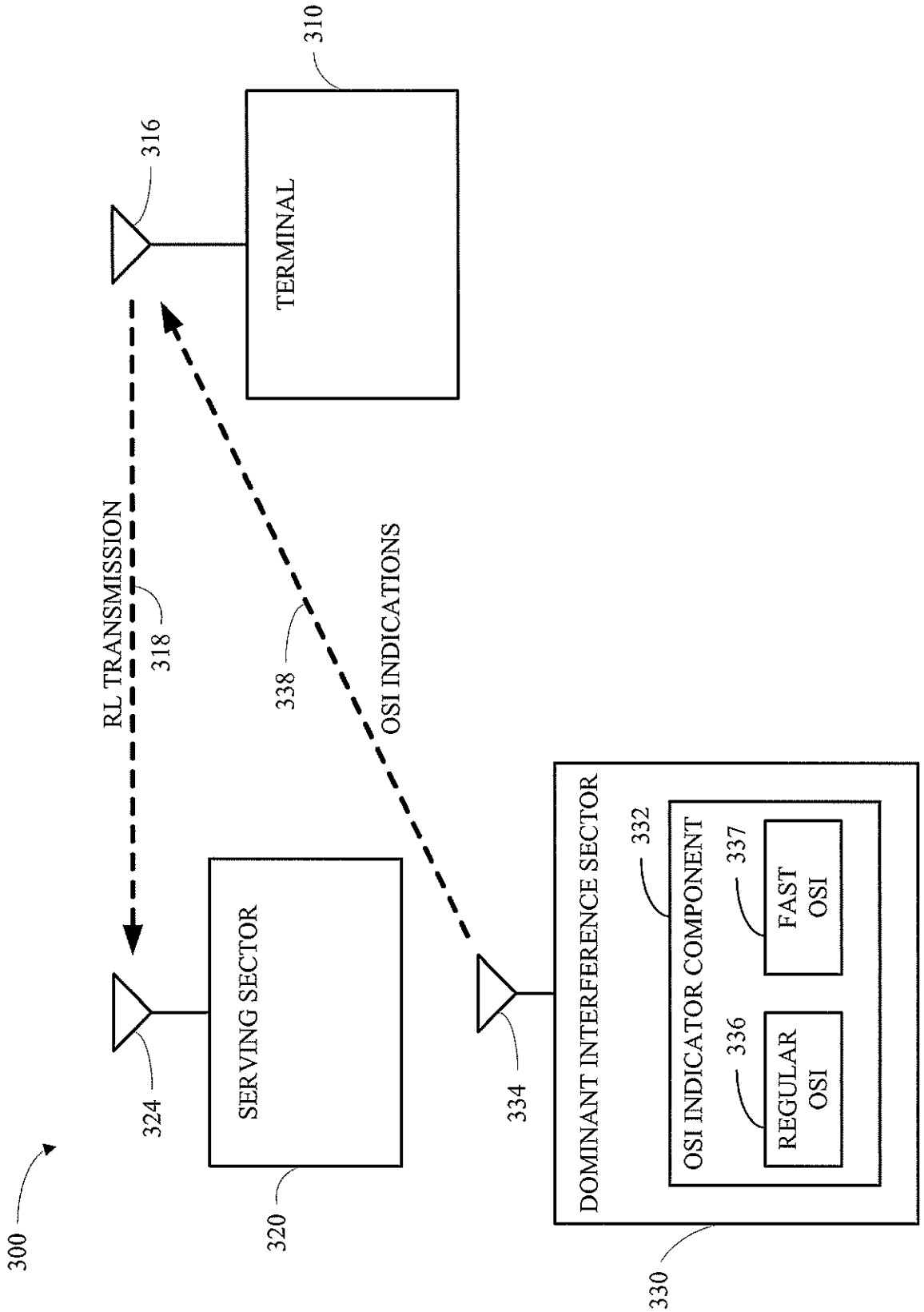
300
310
TERMINAL
316
RL TRANSMISSION
318
338
OSI INDICATIONS
SERVING SECTOR
320
324
334
DOMINANT INTERFERENCE SECTOR
330
OSI INDICATOR COMPONENT
332
REGULAR OSI
336
FAST OSI
337

FIG. 3A

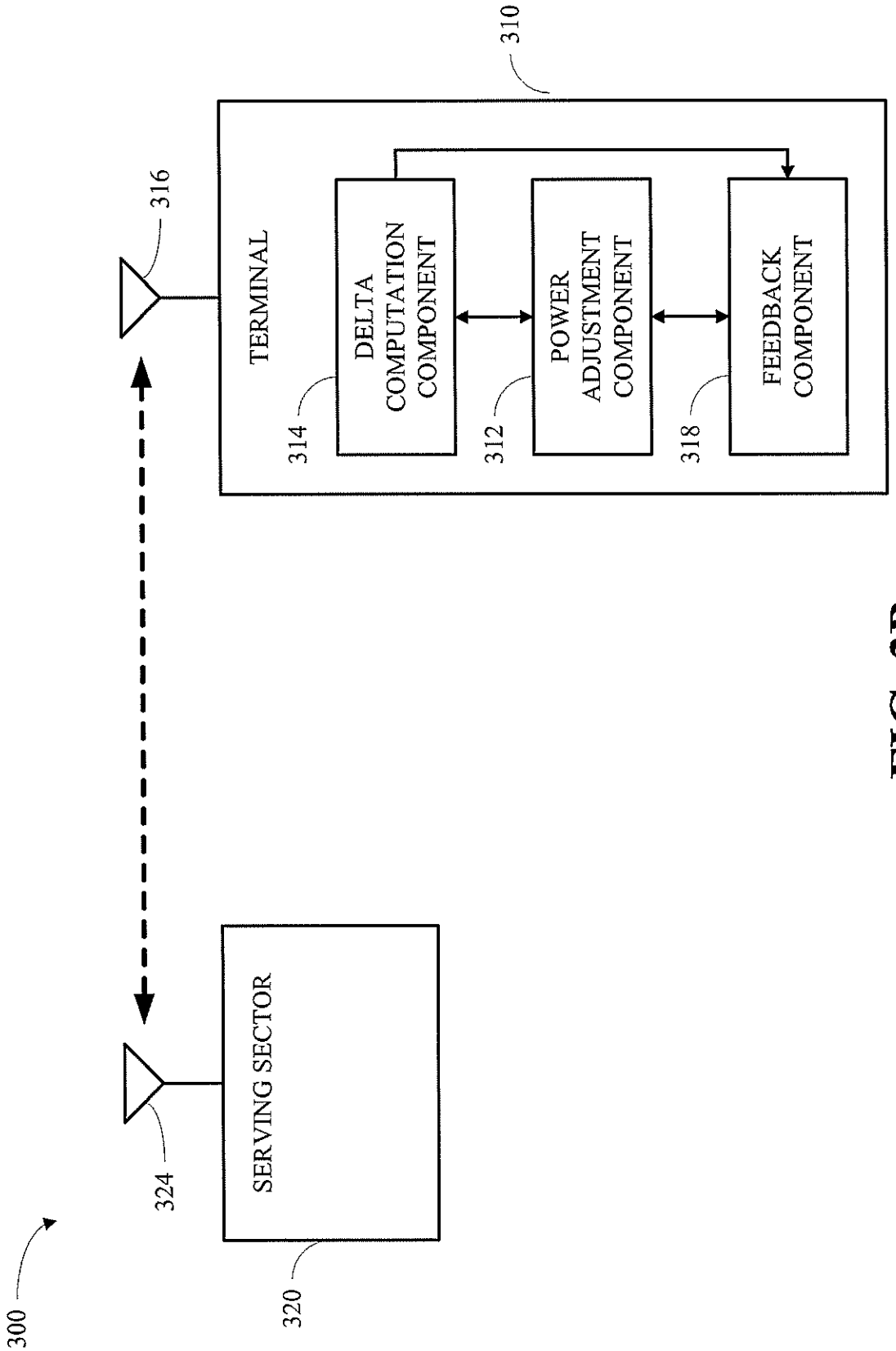
300
310
316
TERMINAL
DELTA COMPUTATION COMPONENT
POWER ADJUSTMENT COMPONENT
FEEDBACK COMPONENT
314
312
318
324
SERVING SECTOR
320

FIG. 3B

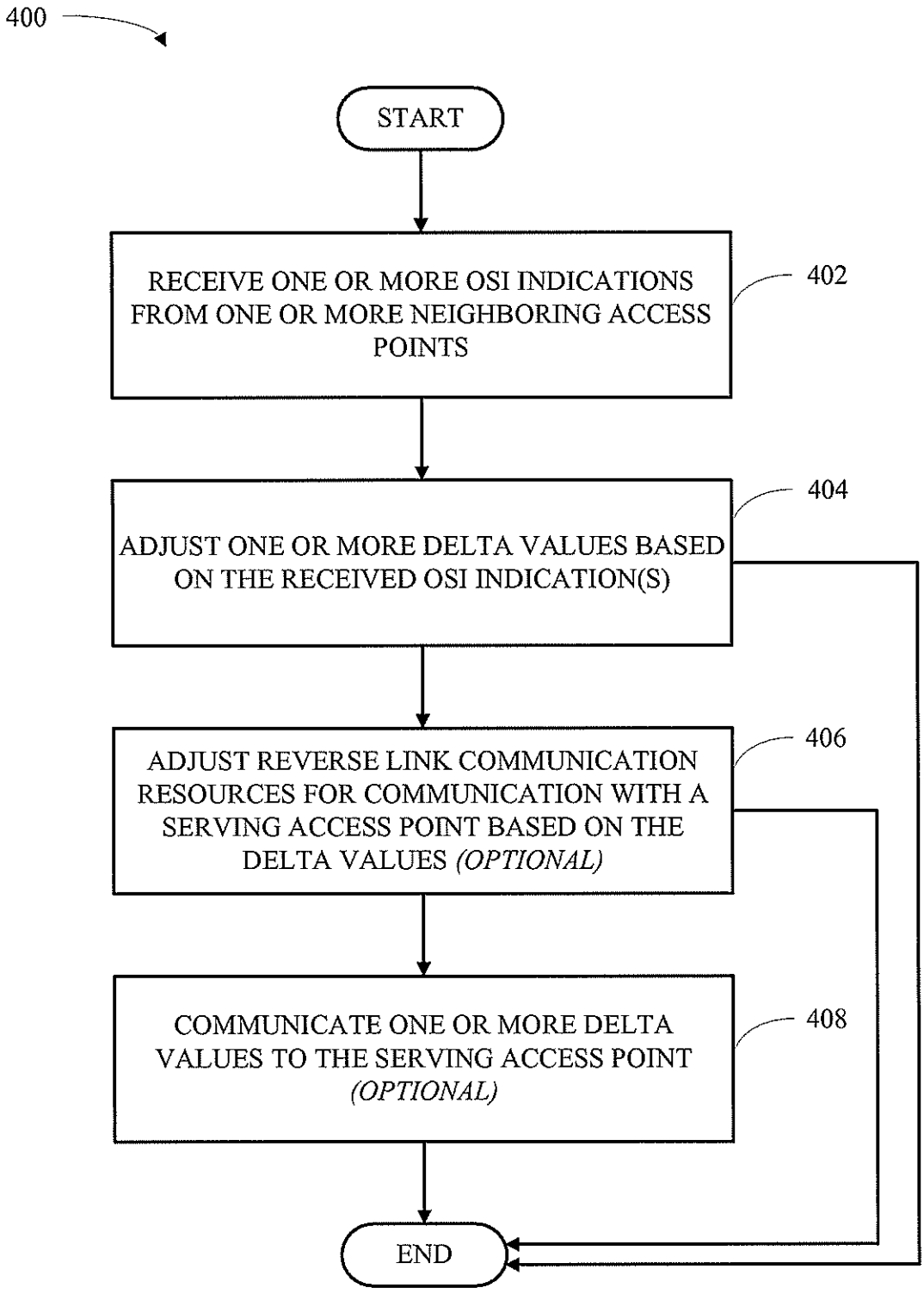
400
START
RECEIVE ONE OR MORE OSI INDICATIONS FROM ONE OR MORE NEIGHBORING ACCESS POINTS
402
ADJUST ONE OR MORE DELTA VALUES BASED ON THE RECEIVED OSI INDICATION(S)
404
ADJUST REVERSE LINK COMMUNICATION RESOURCES FOR COMMUNICATION WITH A SERVING ACCESS POINT BASED ON THE DELTA VALUES (OPTIONAL)
406
COMMUNICATE ONE OR MORE DELTA VALUES TO THE SERVING ACCESS POINT (OPTIONAL)
408
END

FIG. 4

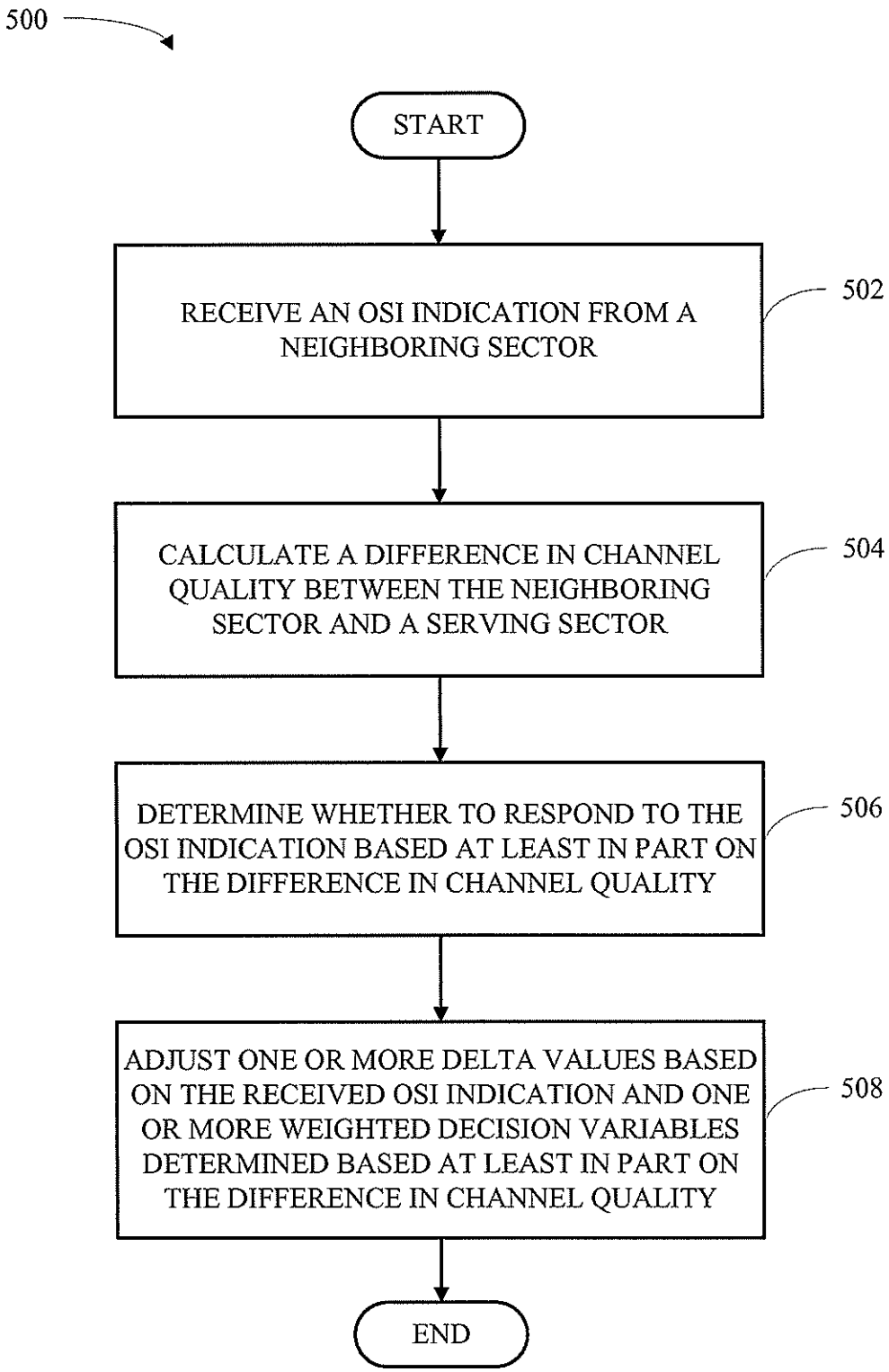
500
START
RECEIVE AN OSI INDICATION FROM A NEIGHBORING SECTOR
502
CALCULATE A DIFFERENCE IN CHANNEL QUALITY BETWEEN THE NEIGHBORING SECTOR AND A SERVING SECTOR
504
DETERMINE WHETHER TO RESPOND TO THE OSI INDICATION BASED AT LEAST IN PART ON THE DIFFERENCE IN CHANNEL QUALITY
506
ADJUST ONE OR MORE DELTA VALUES BASED ON THE RECEIVED OSI INDICATION AND ONE OR MORE WEIGHTED DECISION VARIABLES DETERMINED BASED AT LEAST IN PART ON THE DIFFERENCE IN CHANNEL QUALITY
508
END

FIG. 5

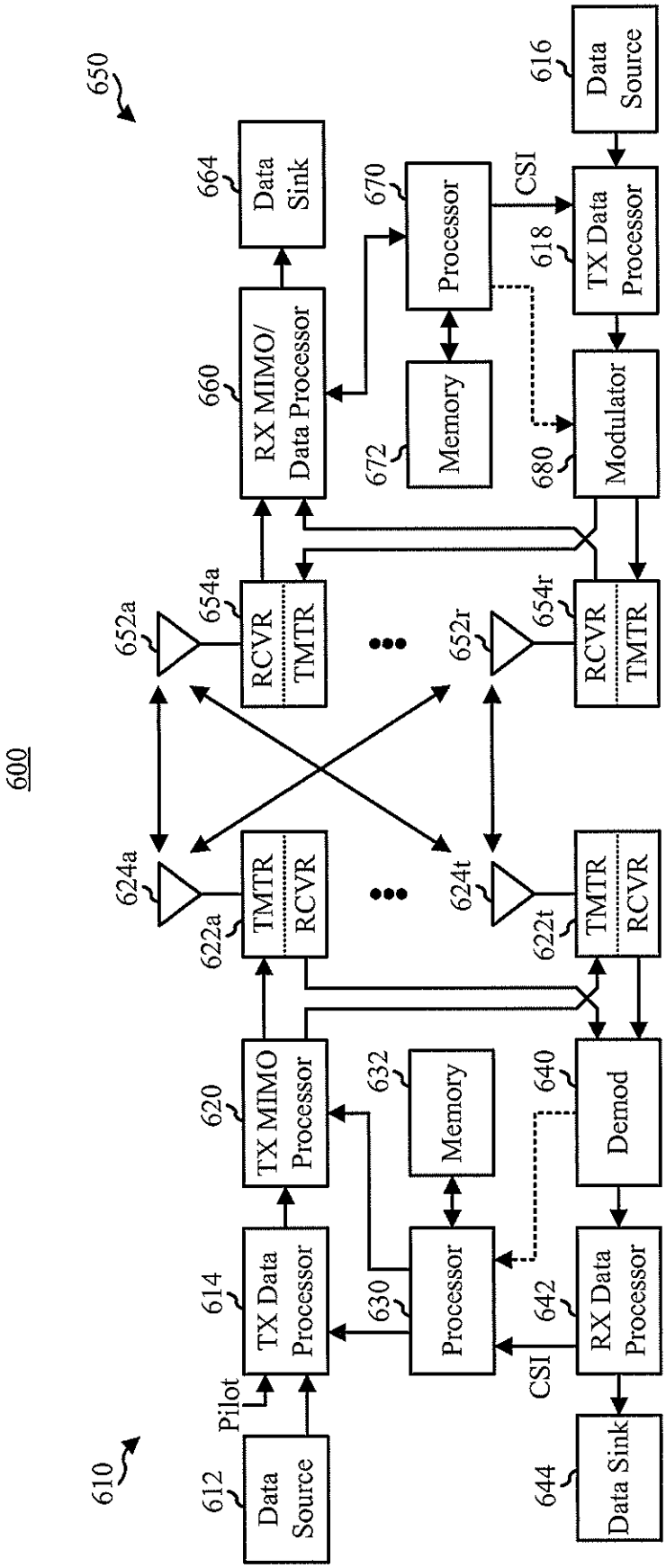
600
610
612
Data Source
Pilot
614
TX Data Processor
620
TX MIMO Processor
622a
TMTR RCVR
624a
624t
622t
TMTR RCVR
630
Processor
632
Memory
640
Demod
642
RX Data Processor
CSI
644
Data Sink
650
652a
654a
RCVR TMTR
652r
654r
RCVR TMTR
660
RX MIMO/ Data Processor
664
Data Sink
670
Processor
672
Memory
680
Modulator
618
TX Data Processor
CSI
616
Data Source

FIG. 6

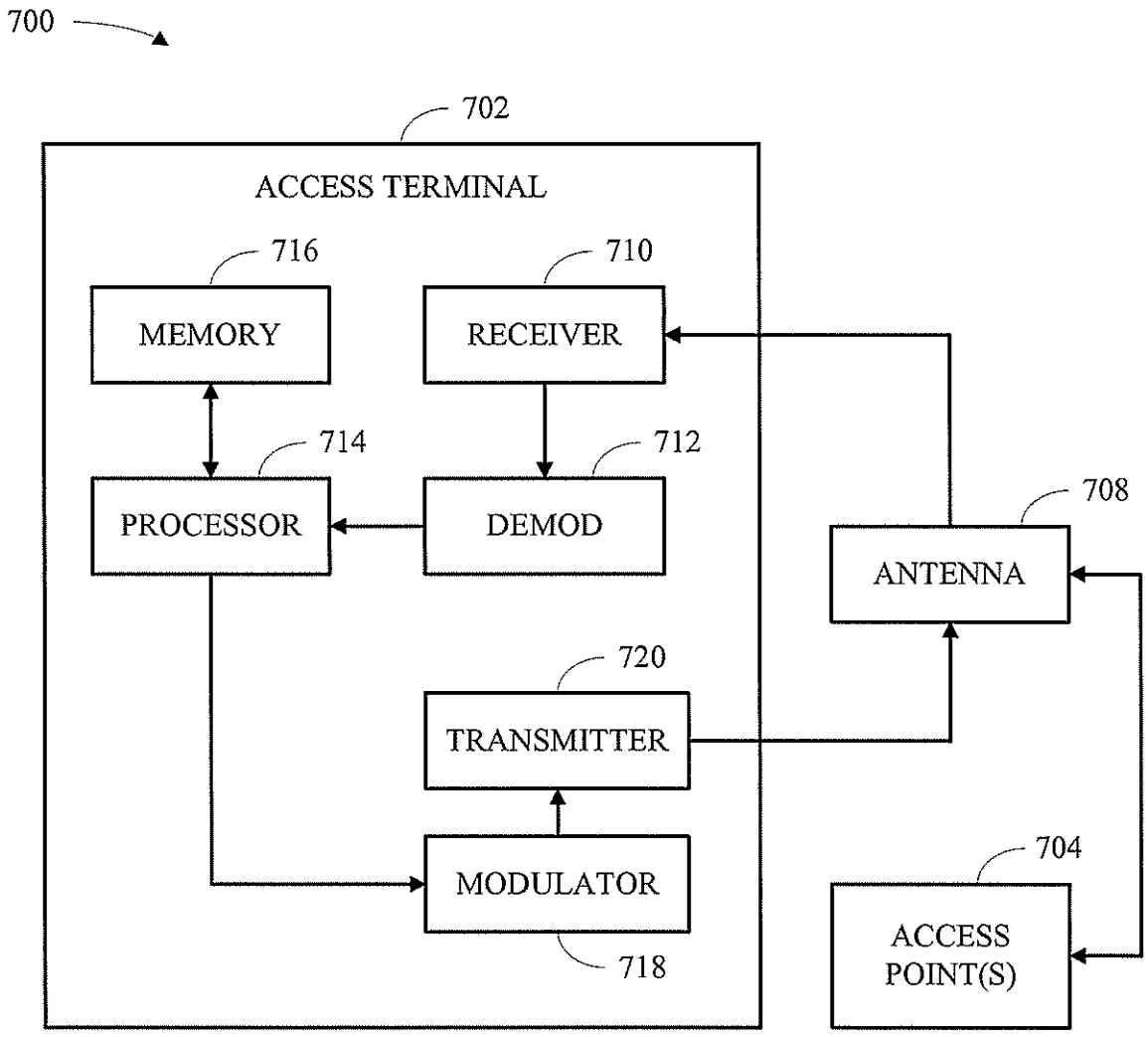
700
702
ACCESS TERMINAL
716
MEMORY
710
RECEIVER
714
PROCESSOR
712
DEMOD
708
ANTENNA
720
TRANSMITTER
MODULATOR
718
704
ACCESS POINT(S)

FIG. 7

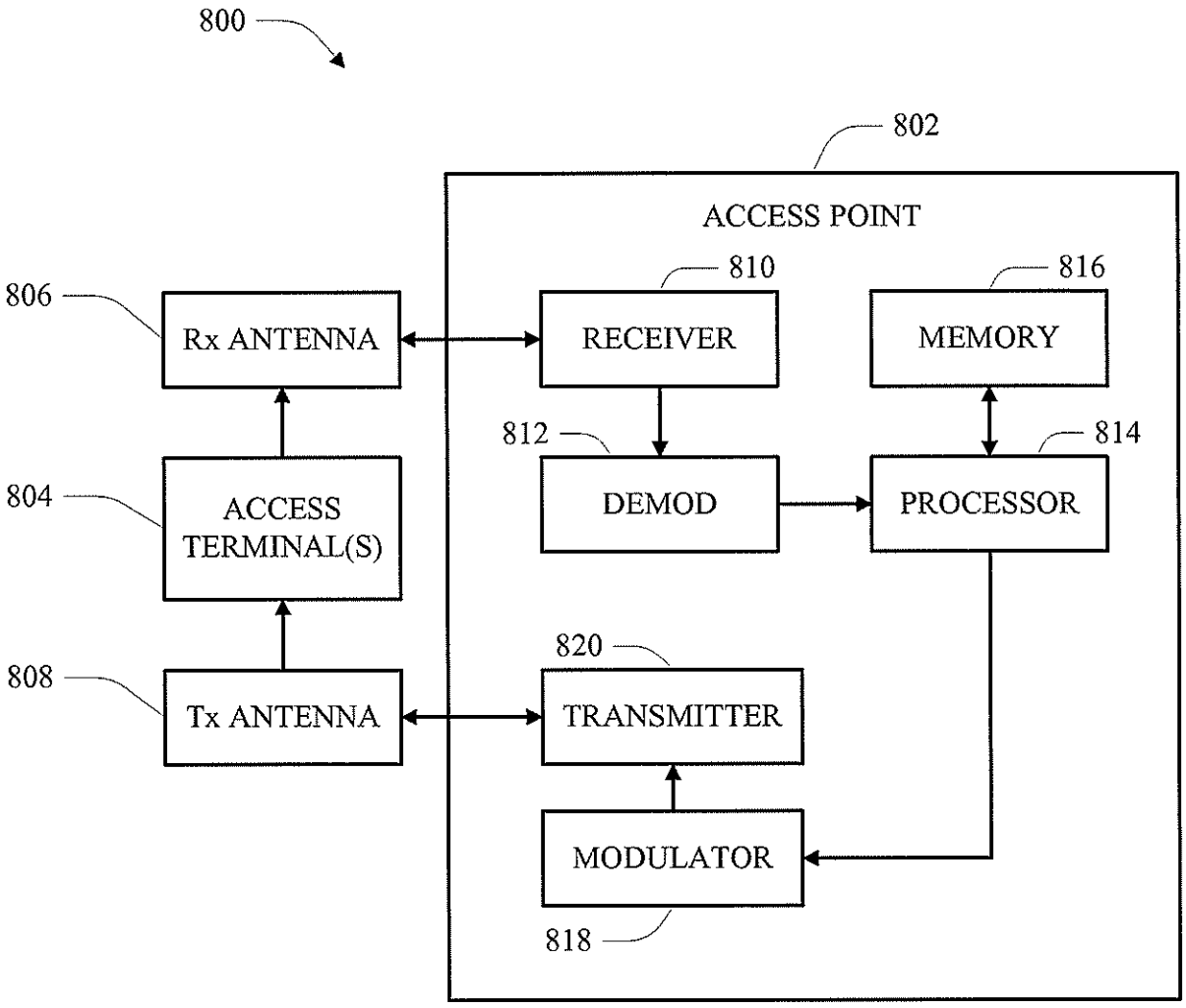
800
802
ACCESS POINT
806
Rx ANTENNA
810
RECEIVER
816
MEMORY
812
814
804
ACCESS TERMINAL(S)
DEMOD
PROCESSOR
820
808
Tx ANTENNA
TRANSMITTER
MODULATOR
818

FIG. 8

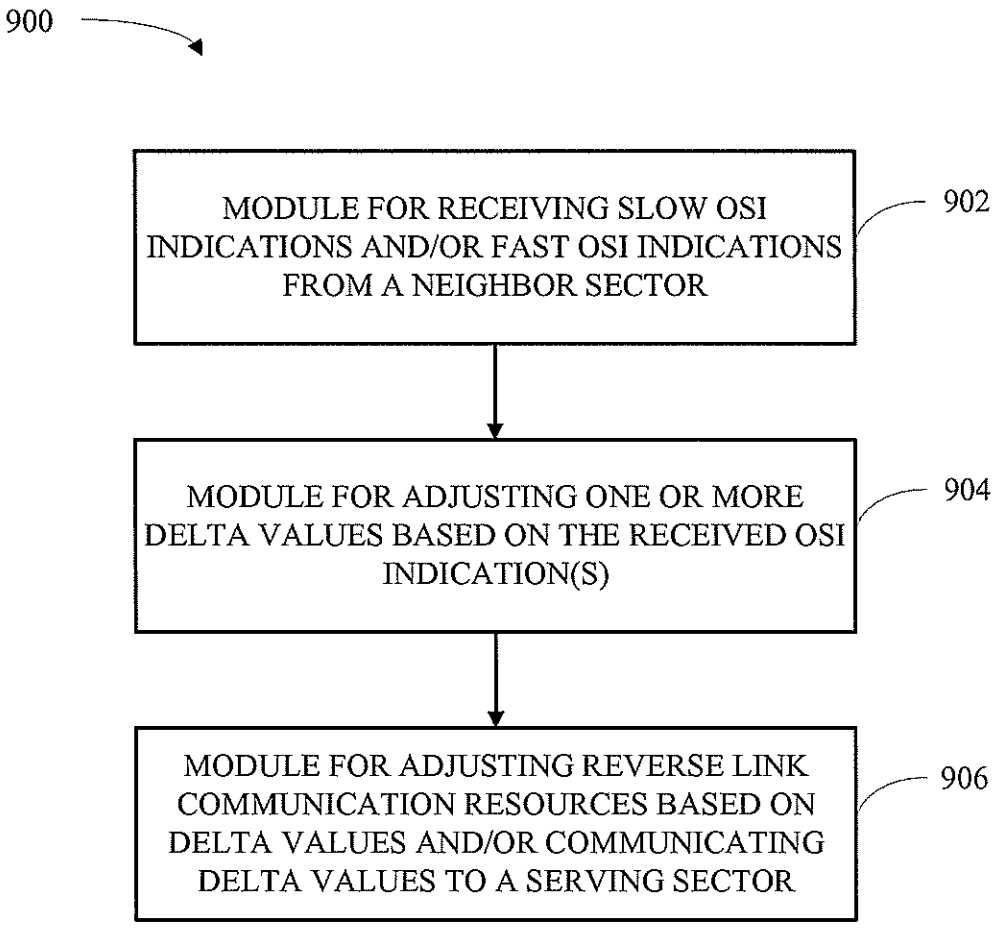
900
MODULE FOR RECEIVING SLOW OSI INDICATIONS AND/OR FAST OSI INDICATIONS FROM A NEIGHBOR SECTOR
902
MODULE FOR ADJUSTING ONE OR MORE DELTA VALUES BASED ON THE RECEIVED OSI INDICATION(S)
904
MODULE FOR ADJUSTING REVERSE LINK COMMUNICATION RESOURCES BASED ON DELTA VALUES AND/OR COMMUNICATING DELTA VALUES TO A SERVING SECTOR
906

FIG. 9

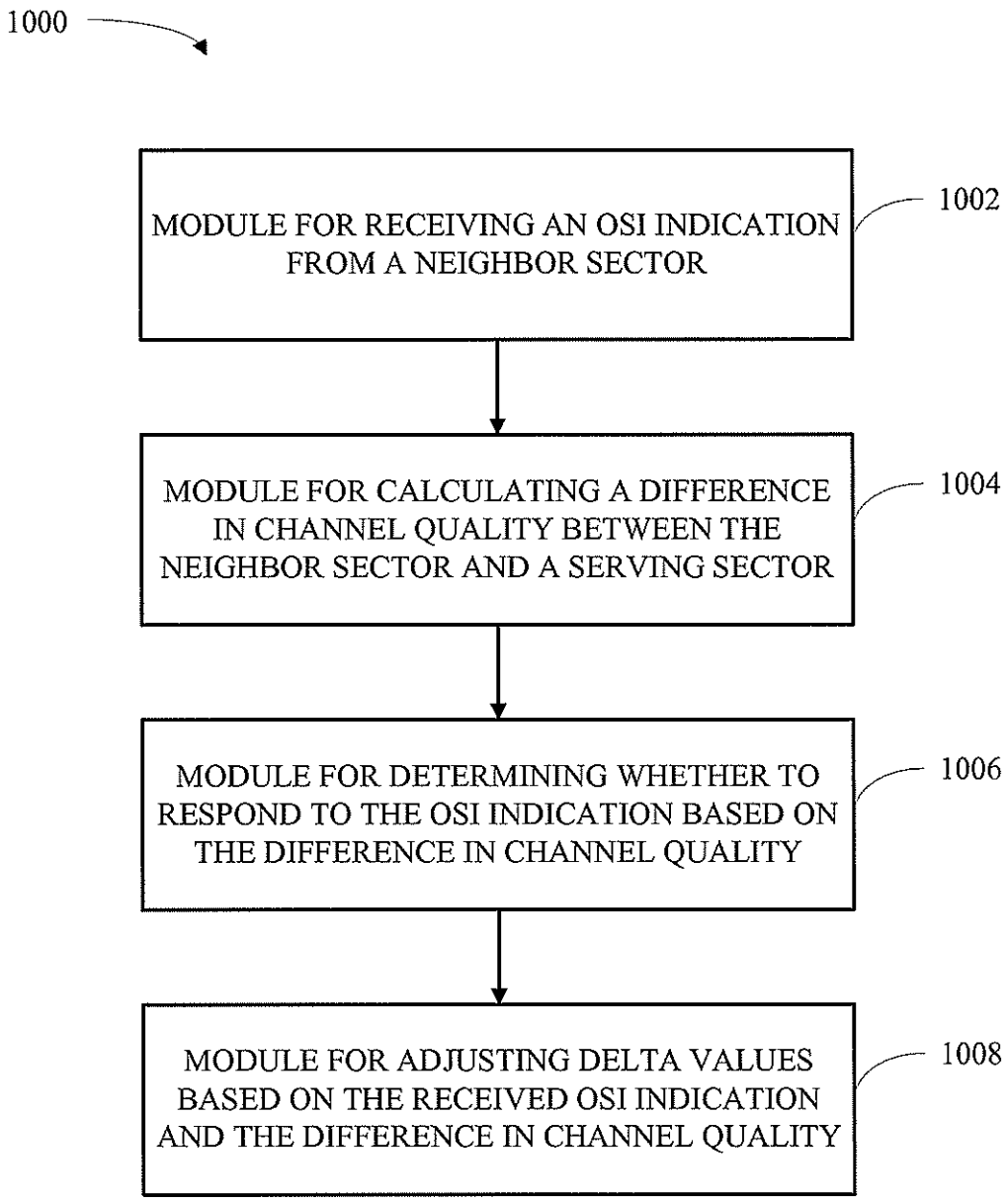
1000
MODULE FOR RECEIVING AN OSI INDICATION FROM A NEIGHBOR SECTOR
1002
MODULE FOR CALCULATING A DIFFERENCE IN CHANNEL QUALITY BETWEEN THE NEIGHBOR SECTOR AND A SERVING SECTOR
1004
MODULE FOR DETERMINING WHETHER TO RESPOND TO THE OSI INDICATION BASED ON THE DIFFERENCE IN CHANNEL QUALITY
1006
MODULE FOR ADJUSTING DELTA VALUES BASED ON THE RECEIVED OSI INDICATION AND THE DIFFERENCE IN CHANNEL QUALITY
1008

FIG. 10