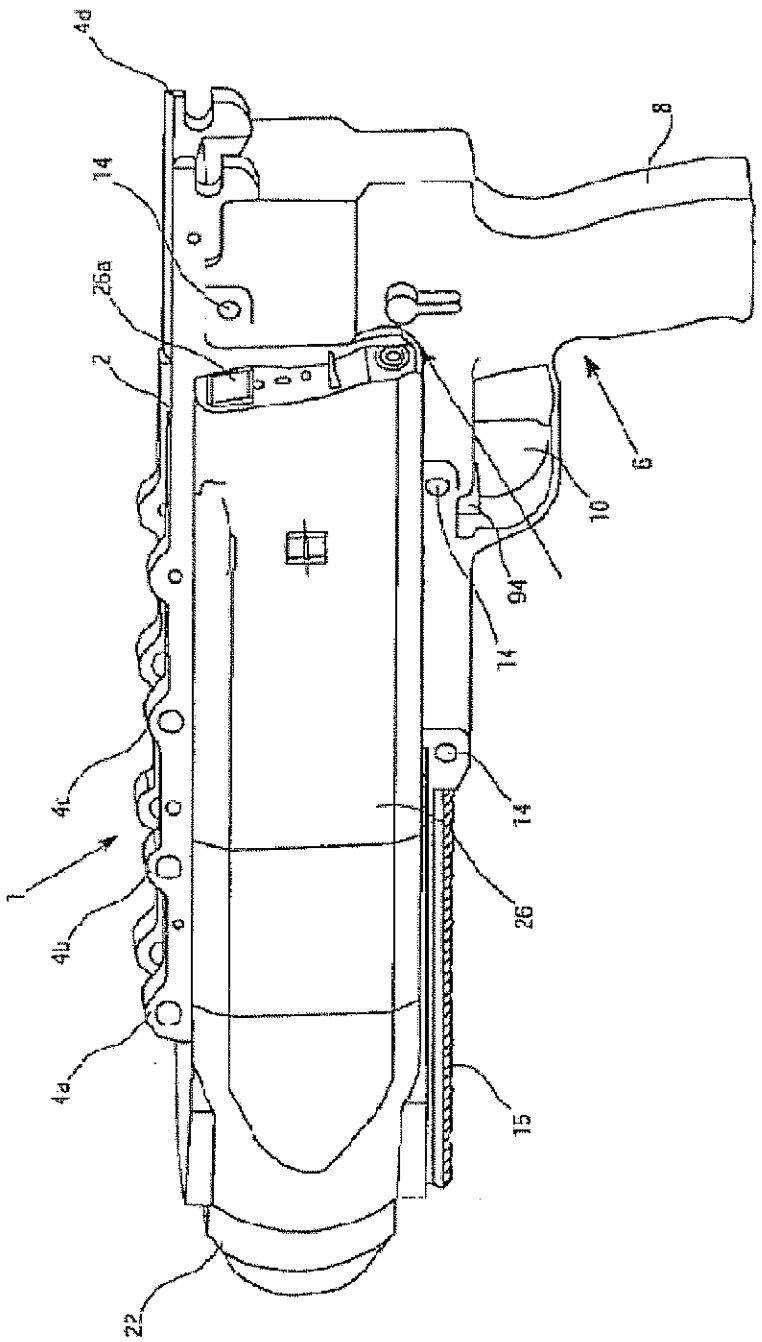

FIG. 1

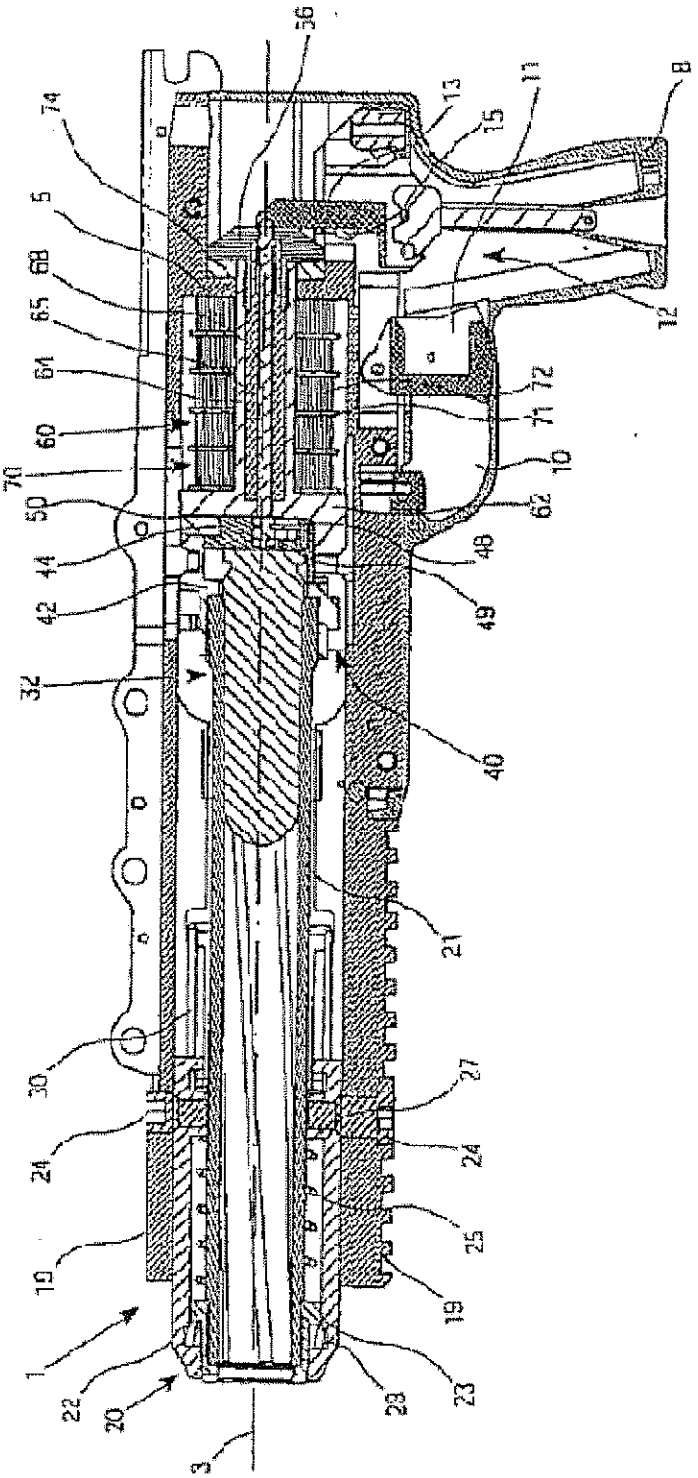
74
5
68
65
64
60
70
50
44
42
32
30
24
19
1
22
20
3
23
28
19
25
24
27
21
40
49
48
62
10
71
72
12
15
13
11
8
36

FIG.2

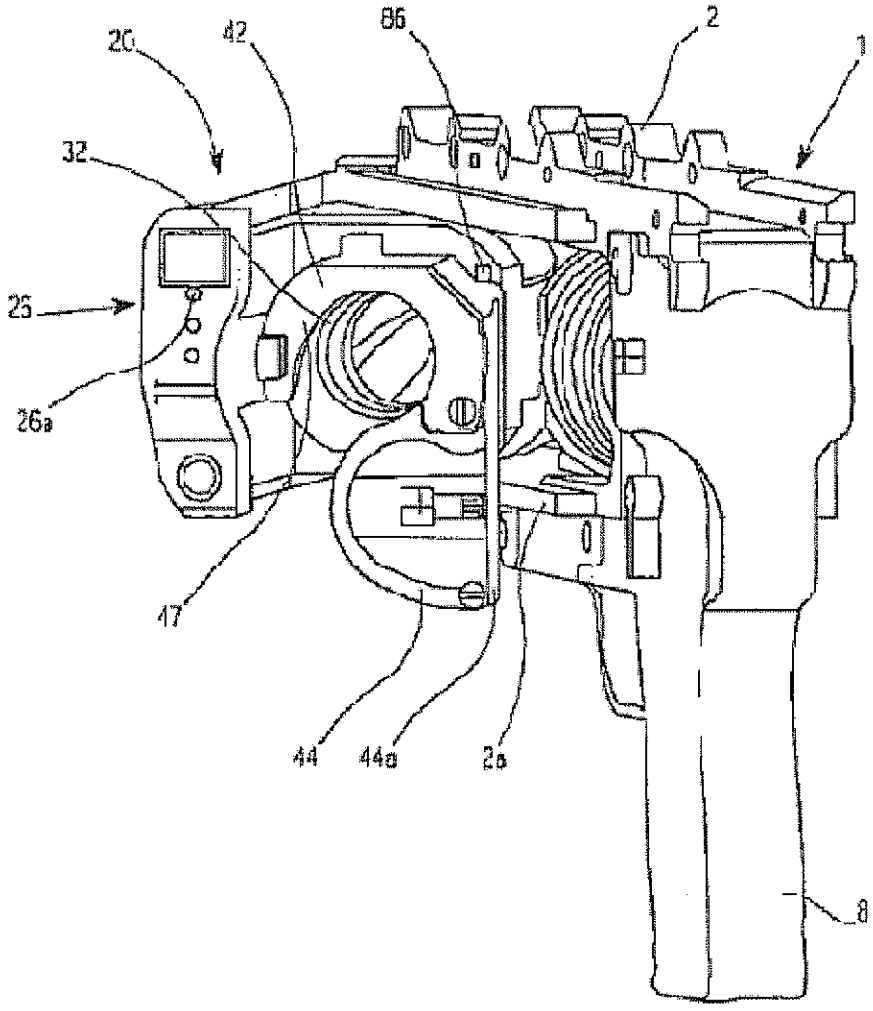

FIG.3

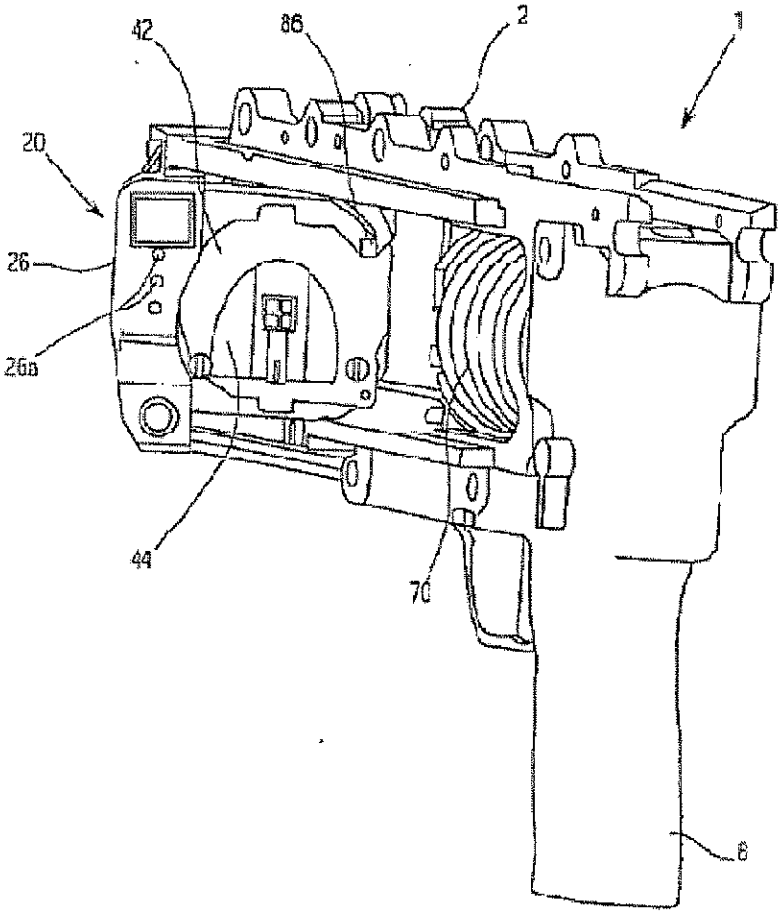

FIG.4

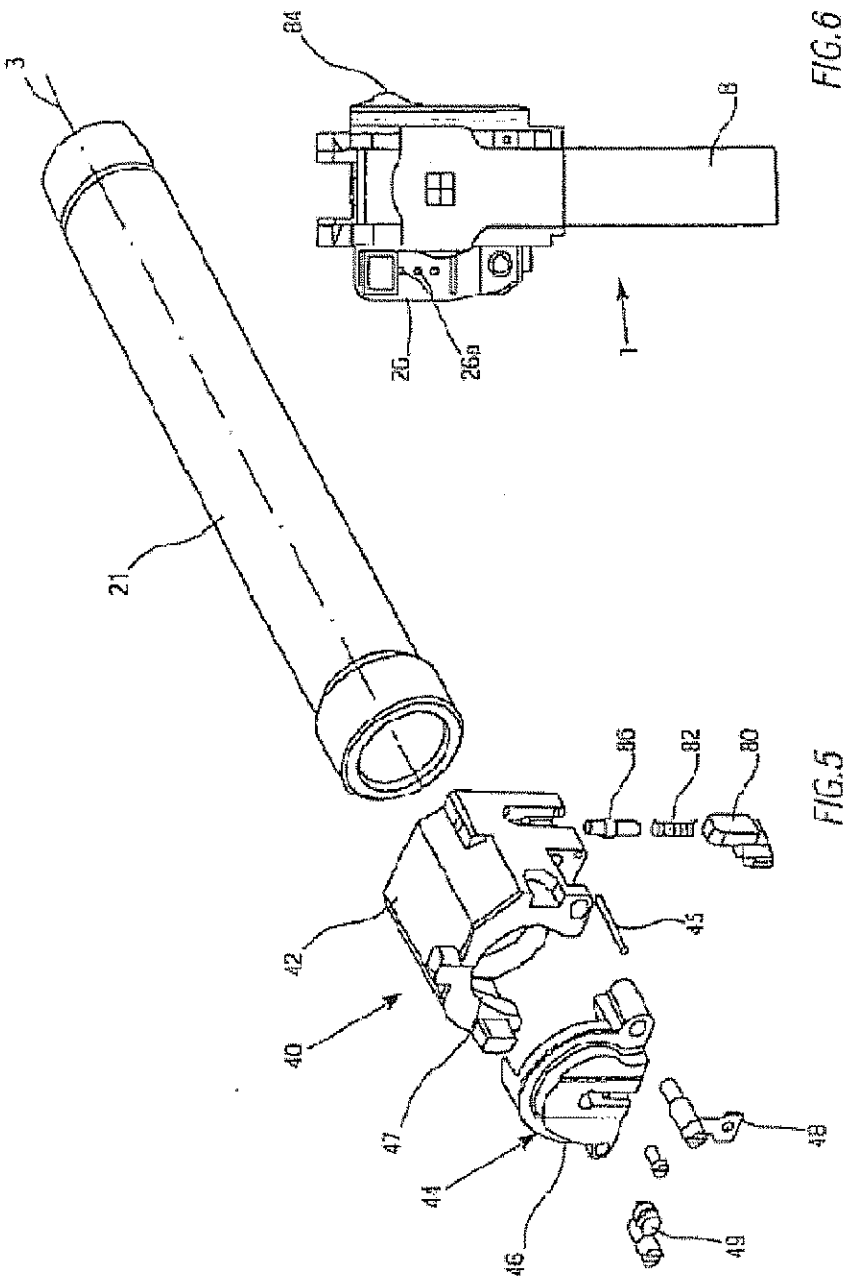

FIG.6

FIG.5

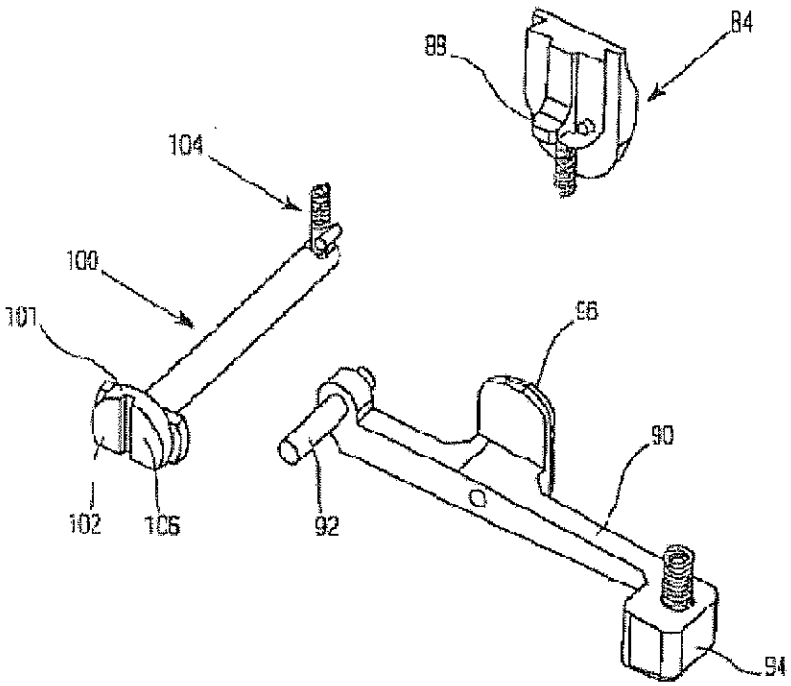

FIG.7

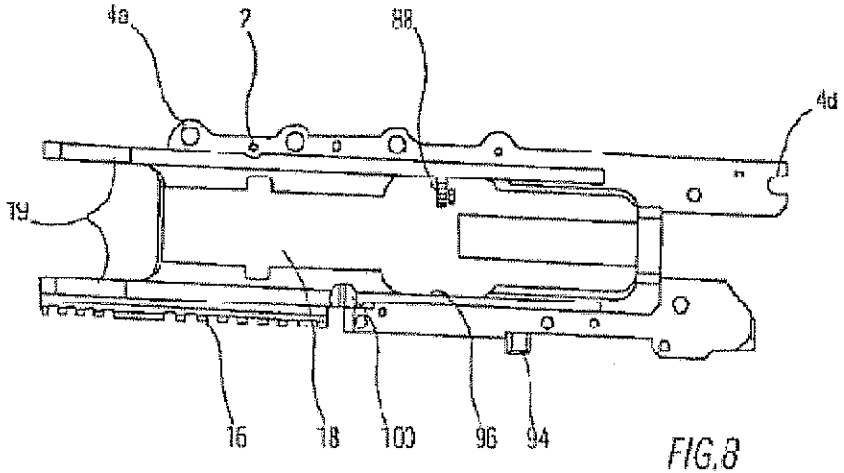

FIG.8