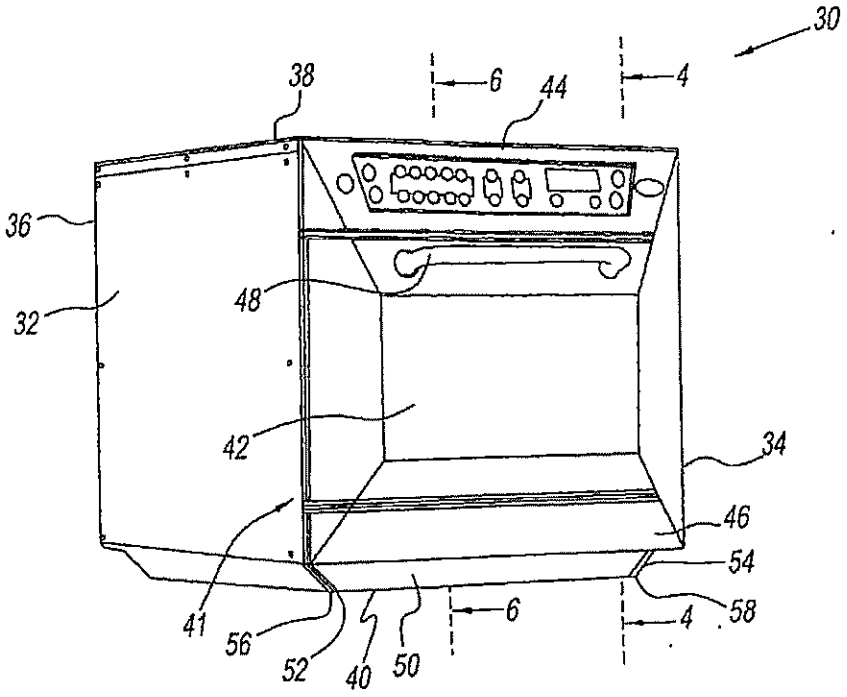

Fig. 1

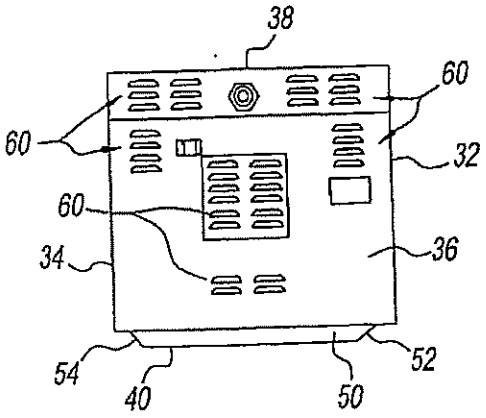

Fig. 2

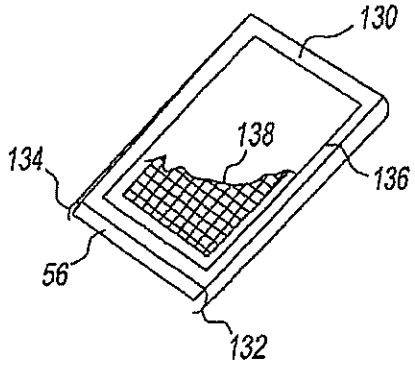

Fig. 3

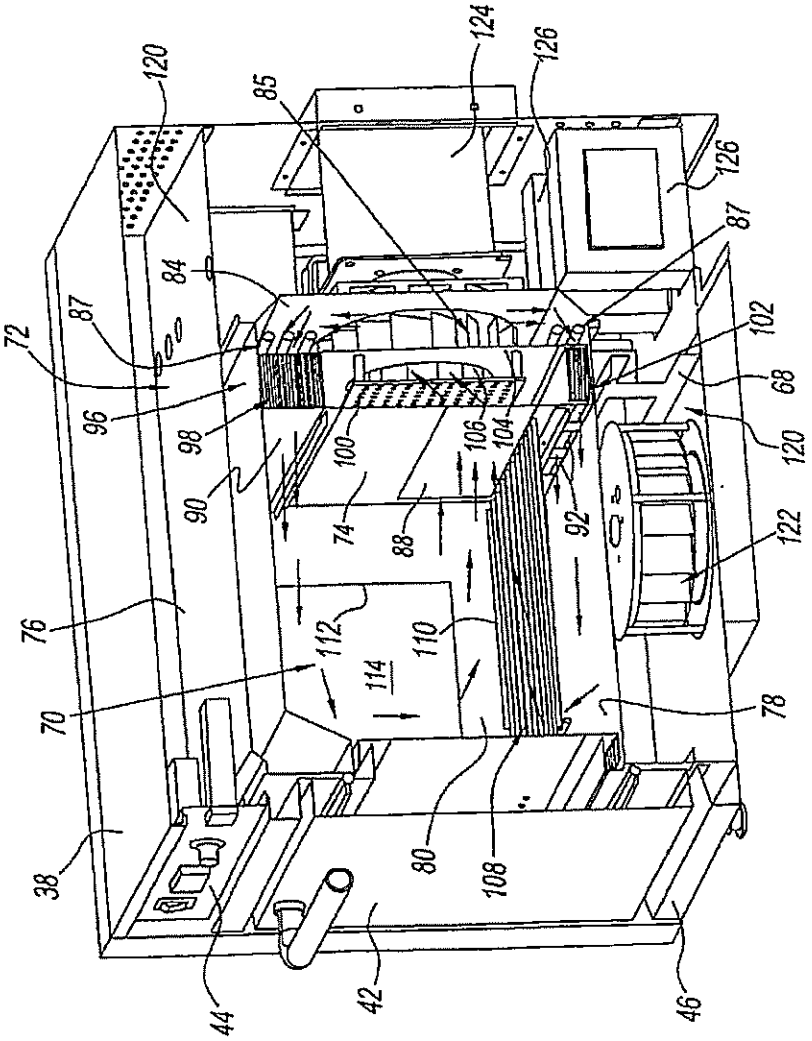
120
85
124
126
126
87
84
87
72
102
96
68
98
100
106
104
120
90
74
88
92
122
76
112
110
114
70
78
38
80
108
44
42
46

Fig. 4

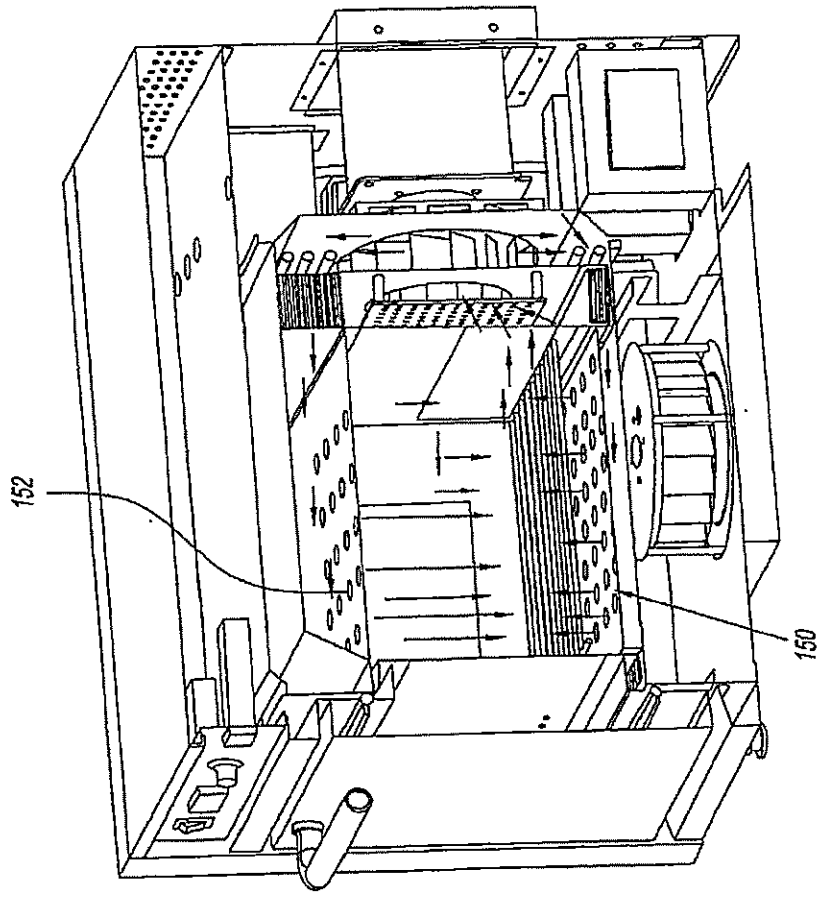

Fig. 5

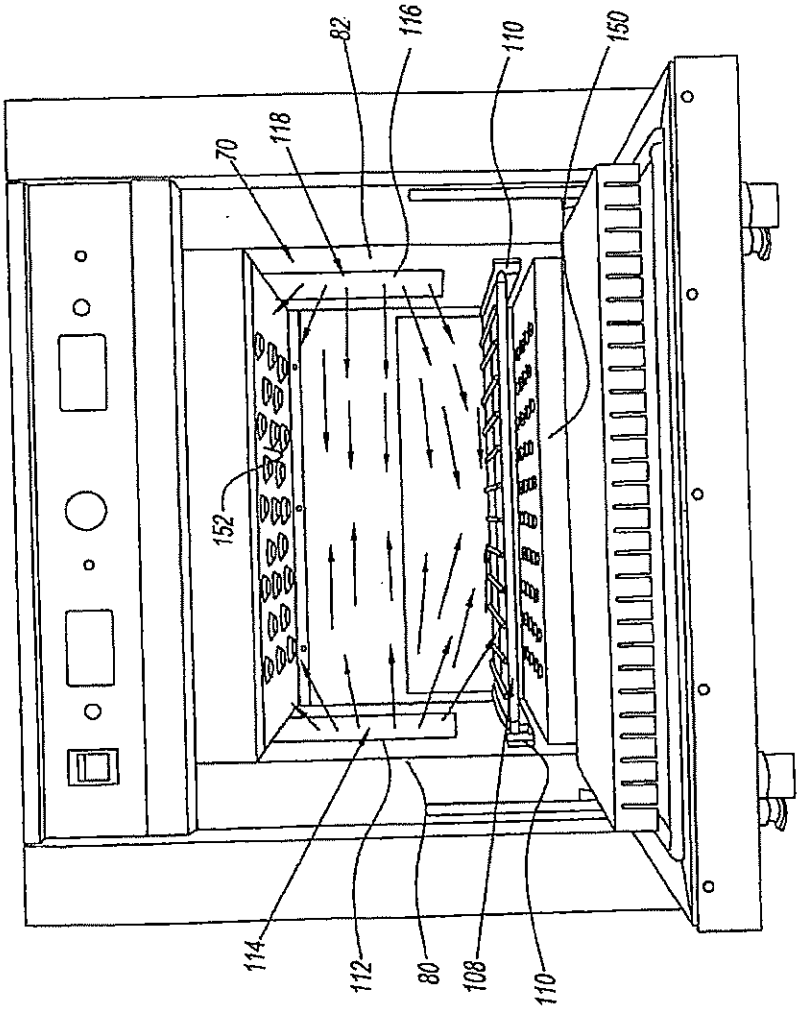

Fig. 6

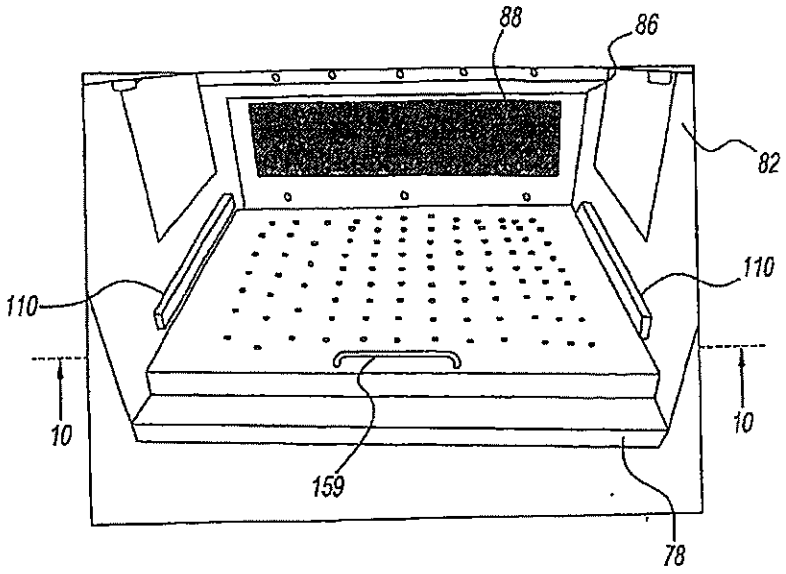

Fig. 7

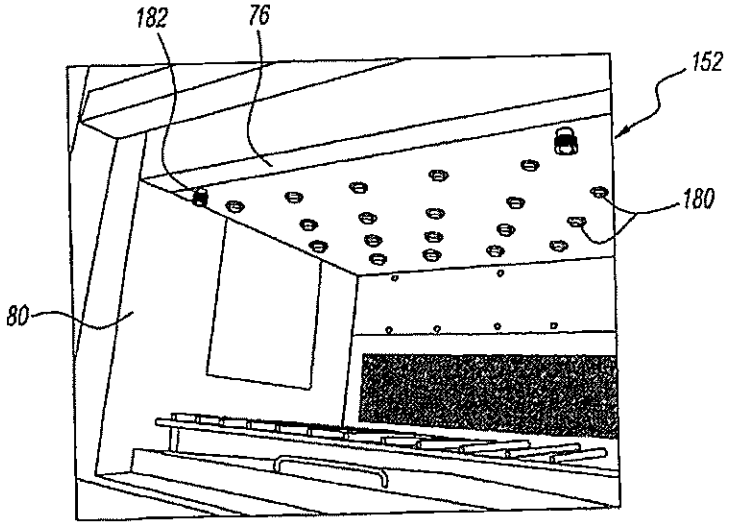

Fig. 8

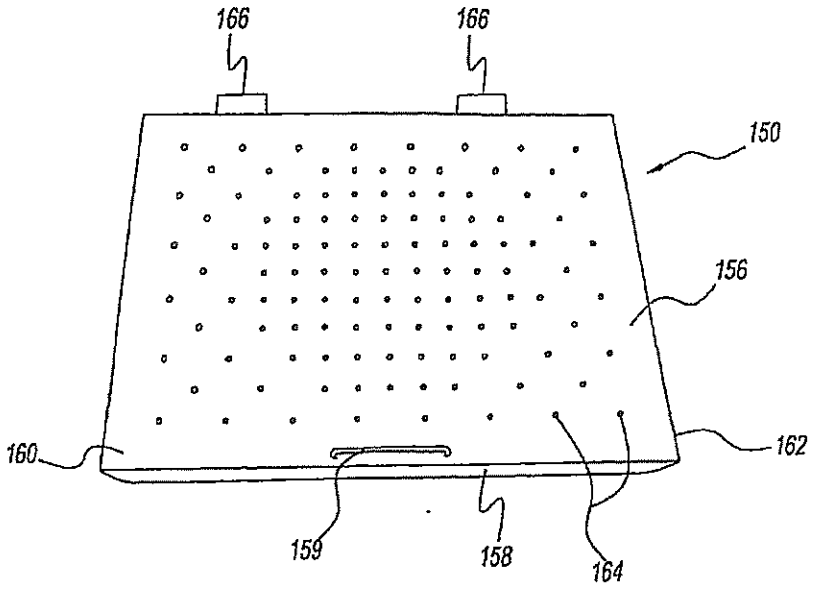
166
166
150
156
160
162
159
158
164

Fig. 9

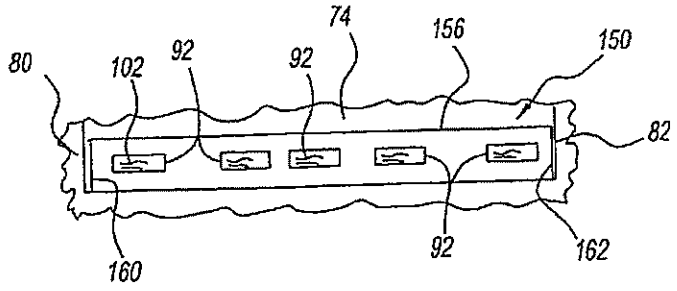
80
102
92
92
74
156
150
82
160
92
162

Fig. 10

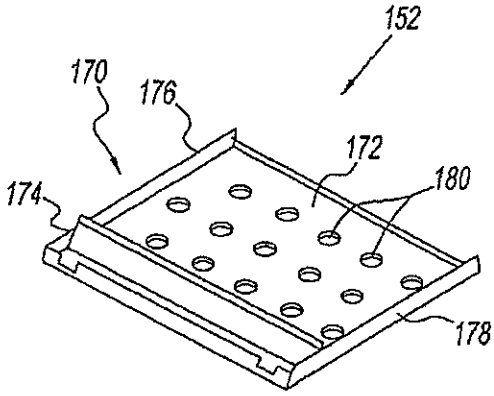

Fig. 11

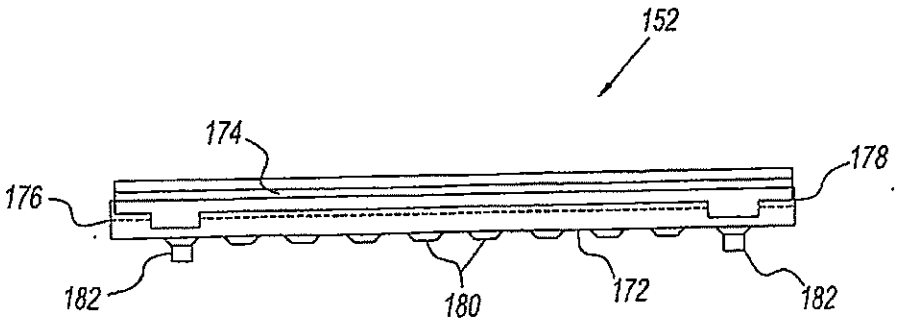

Fig. 12

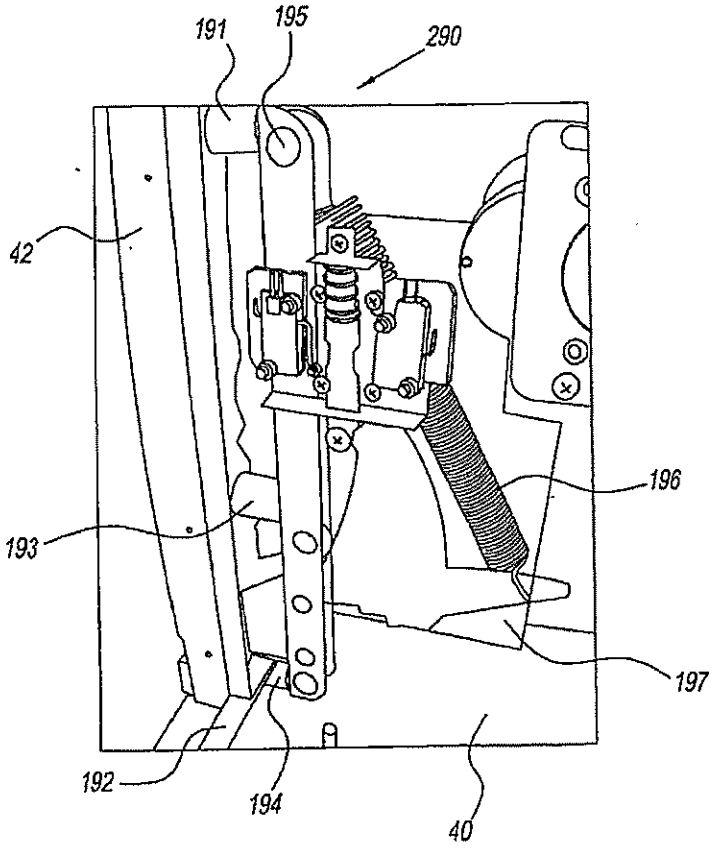

Fig. 13

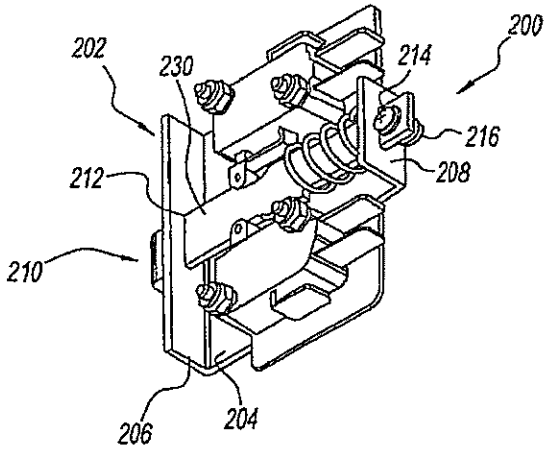

Fig. 14

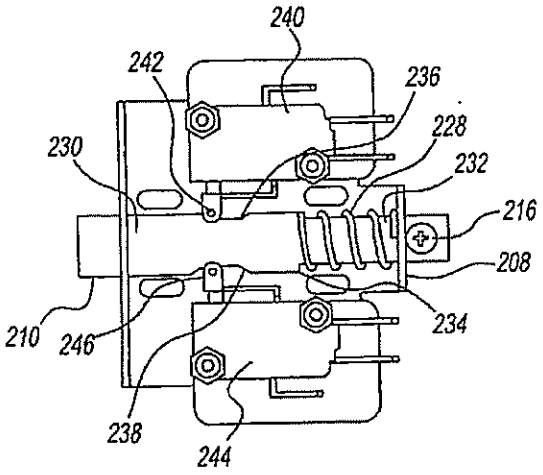

Fig. 15

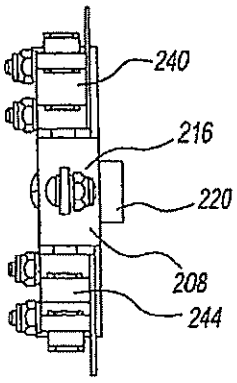

Fig. 16

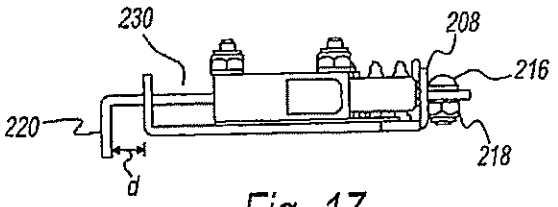

Fig. 17

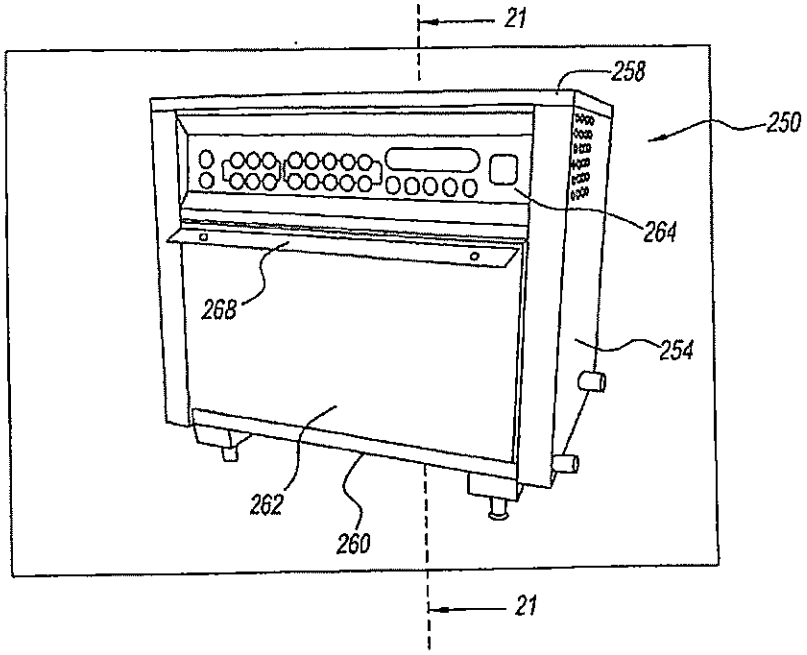

Fig. 18

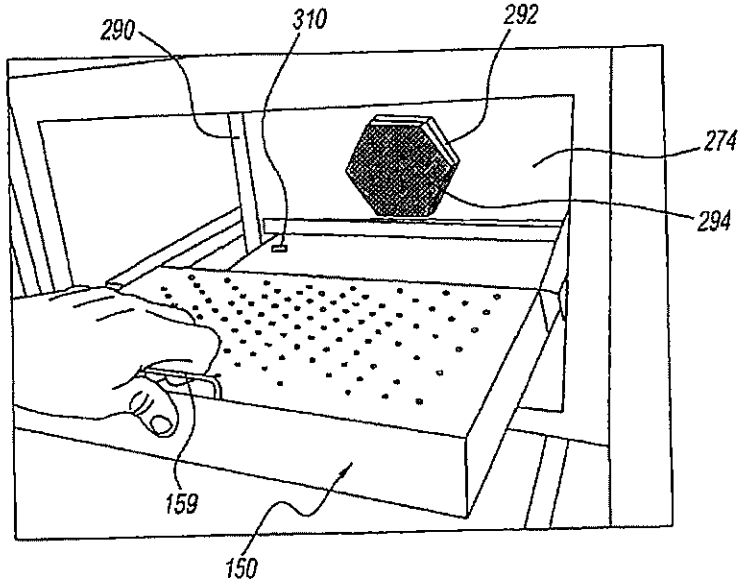

Fig. 19

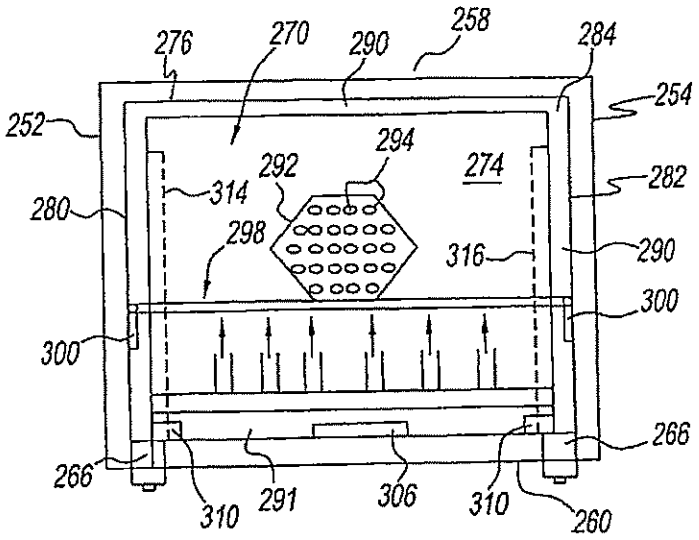
276
270
290
258
284
254
252
294
292
274
282
314
280
298
316
290
300
300
266
266
310
291
306
310
260

Fig. 20

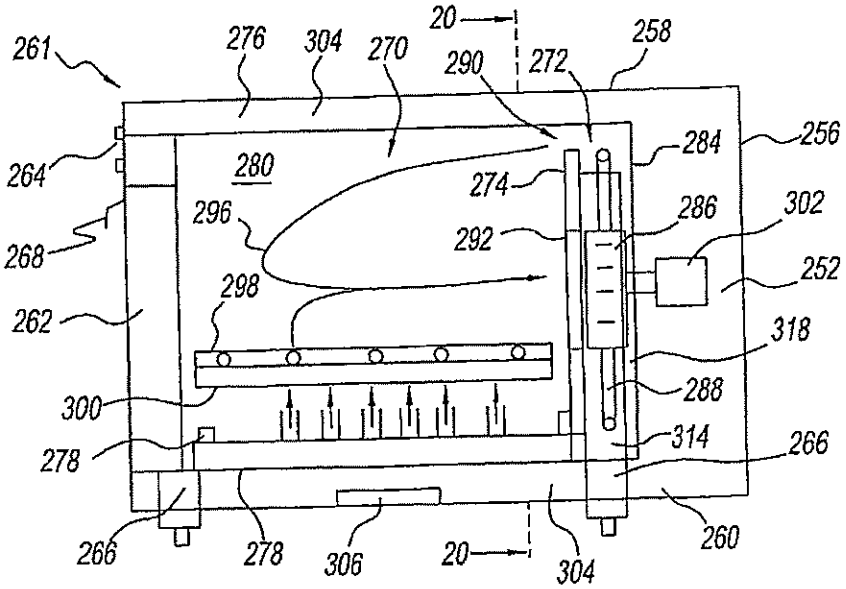
20
261
276
304
270
290
272
258
256
264
280
284
274
286
302
268
296
292
252
262
298
318
300
288
278
314
266
266
278
306
20
304
260

Fig. 21

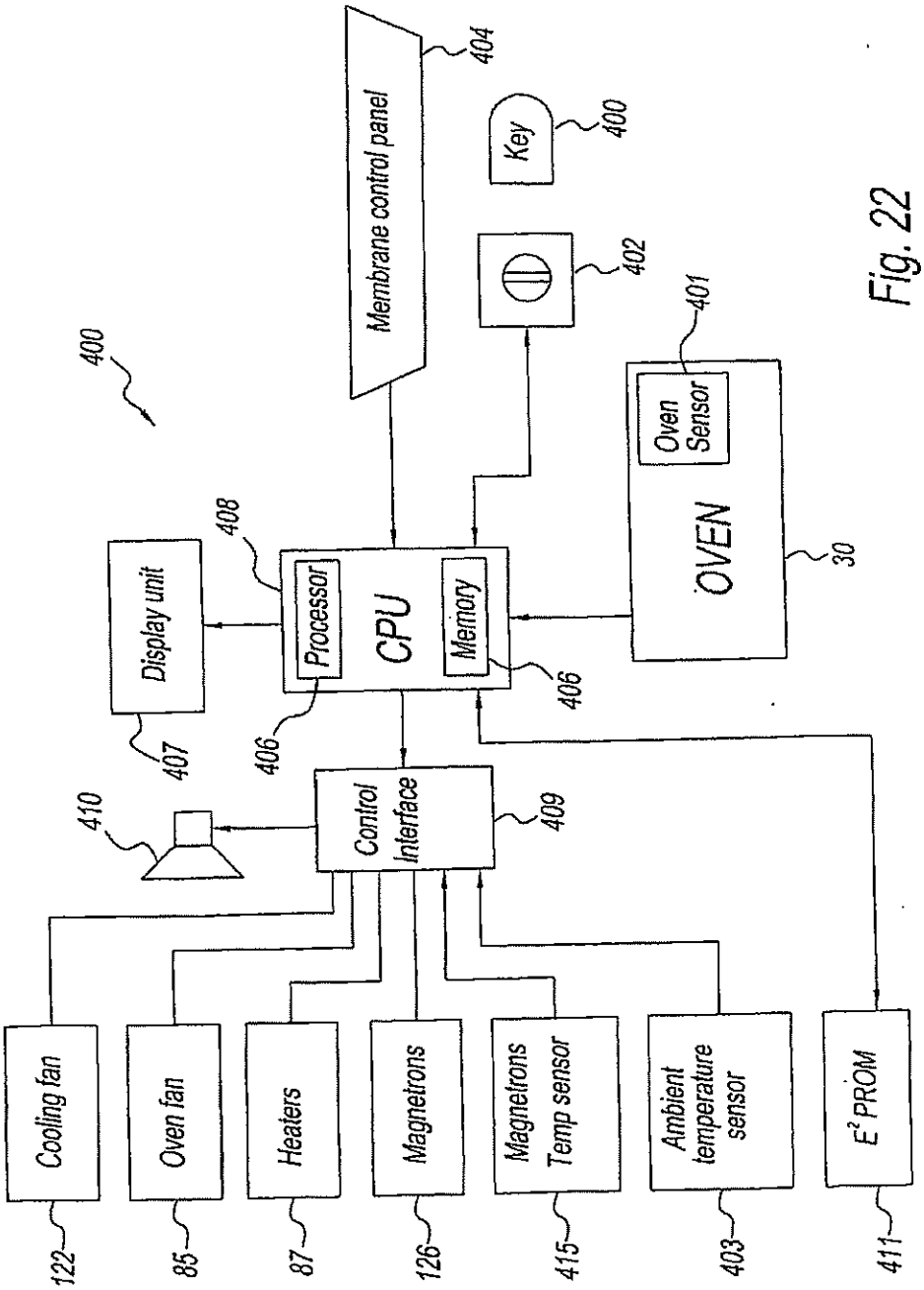
400
Membrane control panel
404
Key
400
402
401
Oven Sensor
OVEN
30
Display unit
408
Processor
CPU
Memory
406
406
407
410
Control Interface
409
Cooling fan
Oven fan
Heaters
Magnetrons
Magnetrons Temp sensor
Ambient temperature sensor
E² PROM
122
85
87
126
415
403
411

Fig. 22

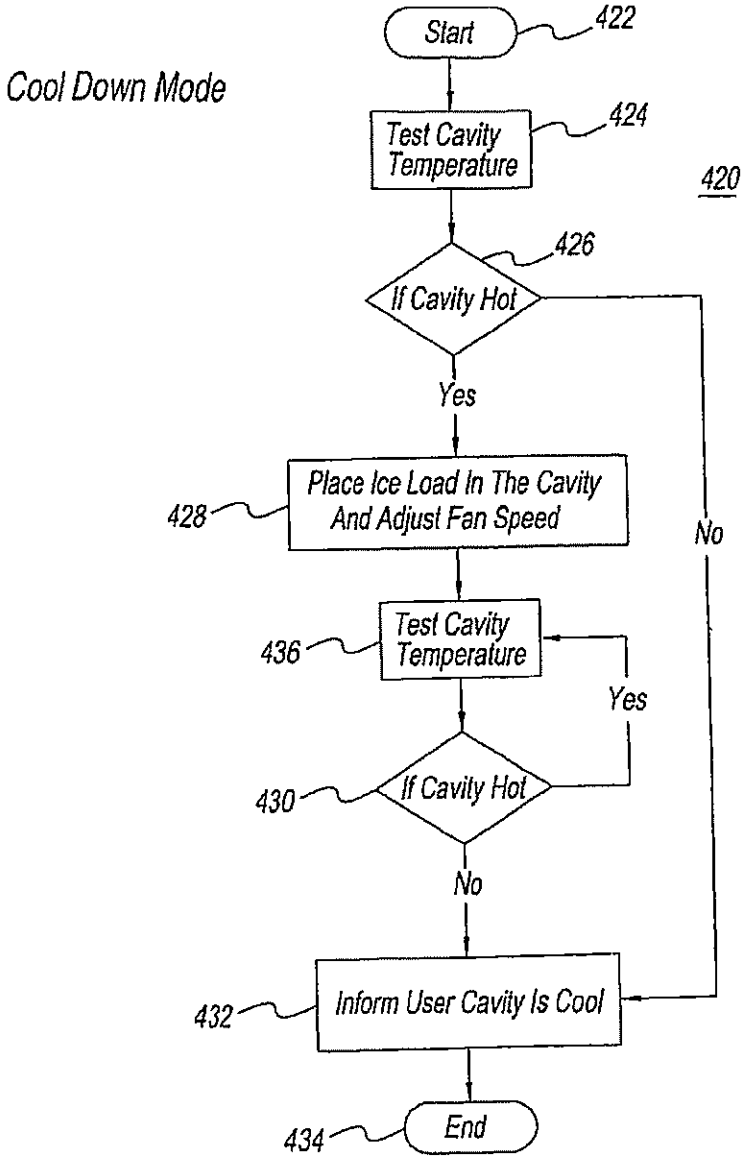
Cool Down Mode
Start
422
Test Cavity Temperature
424
420
If Cavity Hot
426
Yes
No
Place Ice Load In The Cavity And Adjust Fan Speed
428
Test Cavity Temperature
436
Yes
If Cavity Hot
430
No
Inform User Cavity Is Cool
432
End
434

Fig. 23

Duty Cycle

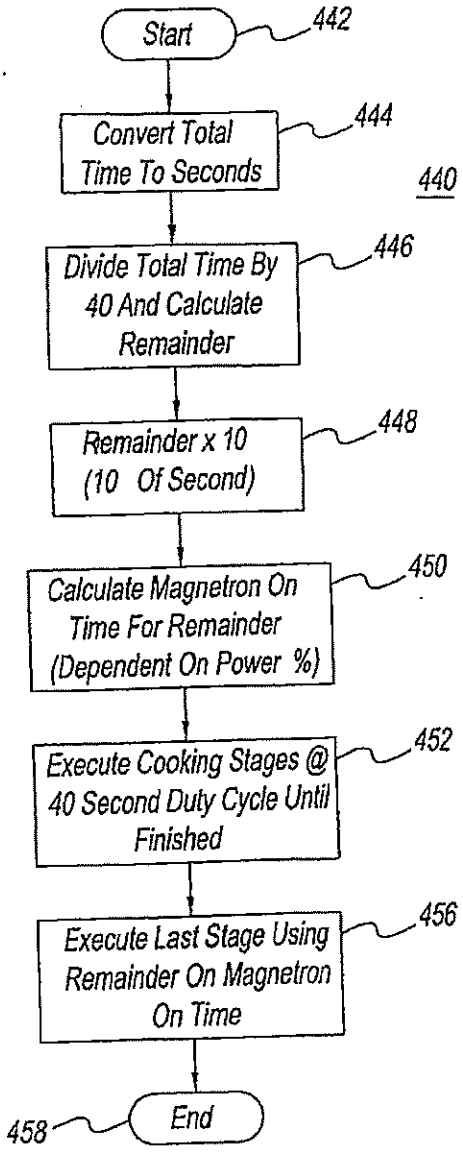

Fig. 24

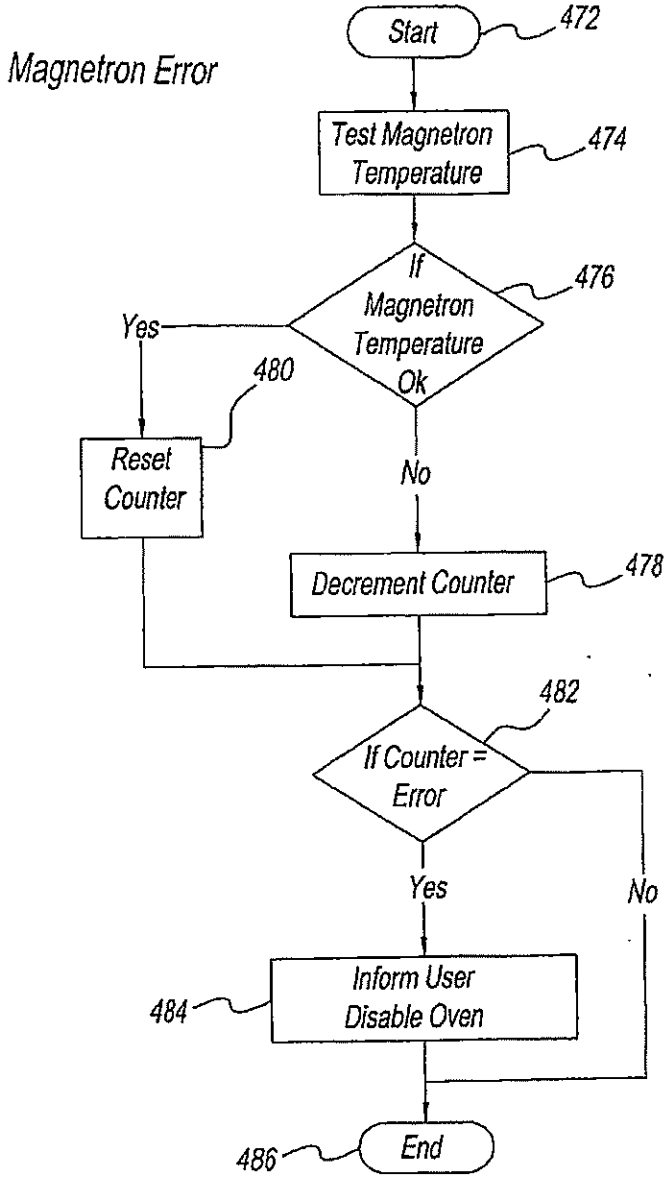
Magnetron Error
470
Start
472
Test Magnetron Temperature
474
If Magnetron Temperature Ok
476
Yes
480
Reset Counter
No
Decrement Counter
478
If Counter = Error
482
Yes
No
Inform User Disable Oven
484
End
486

Fig. 25

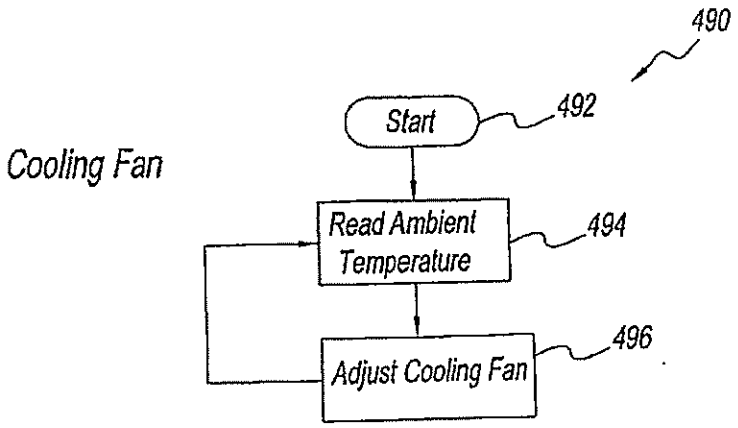
490
Start
492
Cooling Fan
Read Ambient Temperature
494
Adjust Cooling Fan
496

Fig. 26

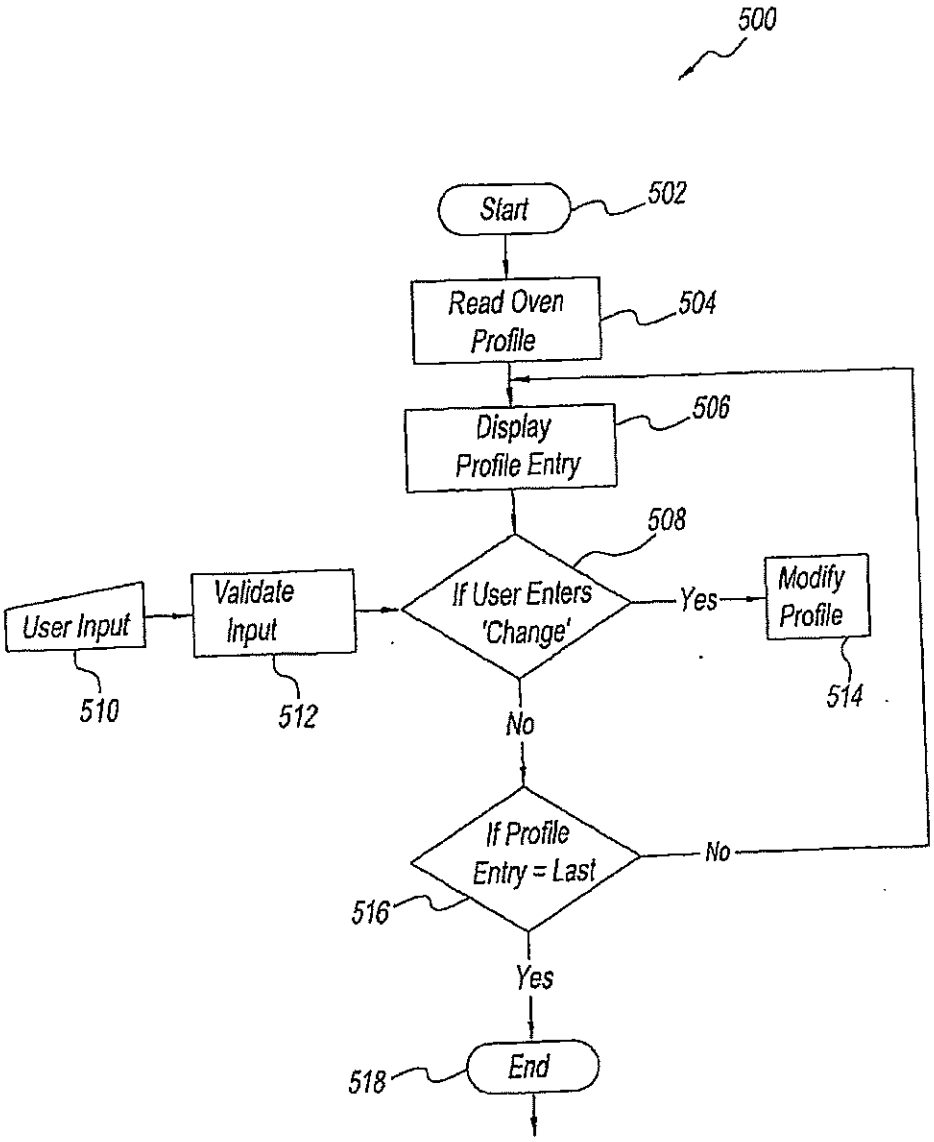
500
Start
502
Read Oven Profile
504
Display Profile Entry
506
If User Enters 'Change'
508
Yes
Modify Profile
514
User Input
510
Validate Input
512
No
If Profile Entry = Last
516
No
Yes
End
518

Fig. 27

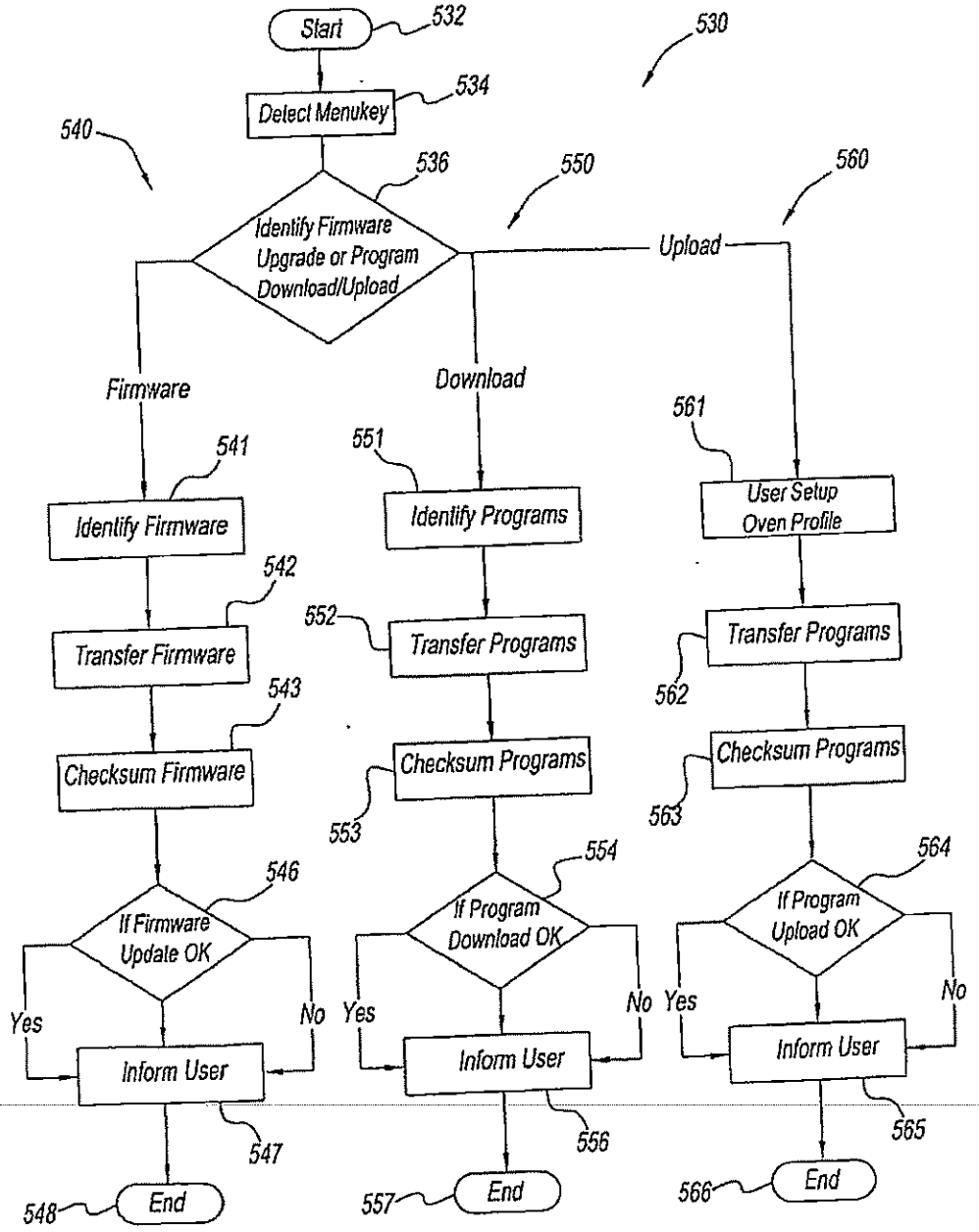
Start
532
530
Detect Menukey
534
540
536
550
560
Identify Firmware Upgrade or Program Download/Upload
Upload
Firmware
Download
561
541
551
Identify Firmware
Identify Programs
User Setup Oven Profile
542
552
Transfer Firmware
Transfer Programs
Transfer Programs
562
543
Checksum Firmware
Checksum Programs
Checksum Programs
553
563
546
554
564
If Firmware Update OK
If Program Download OK
If Program Upload OK
Yes
No
Yes
No
Yes
No
Inform User
Inform User
Inform User
547
556
565
548
End
557
End
566
End

Fig. 28