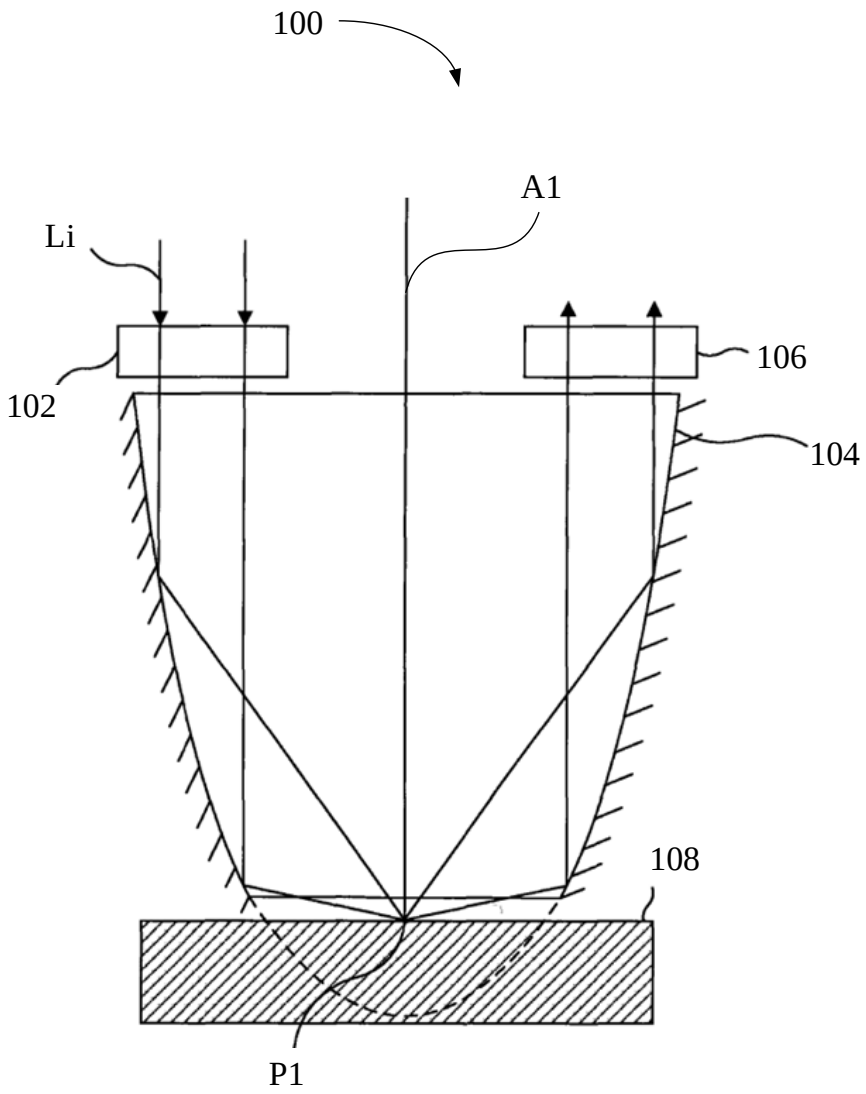

FIG. 1

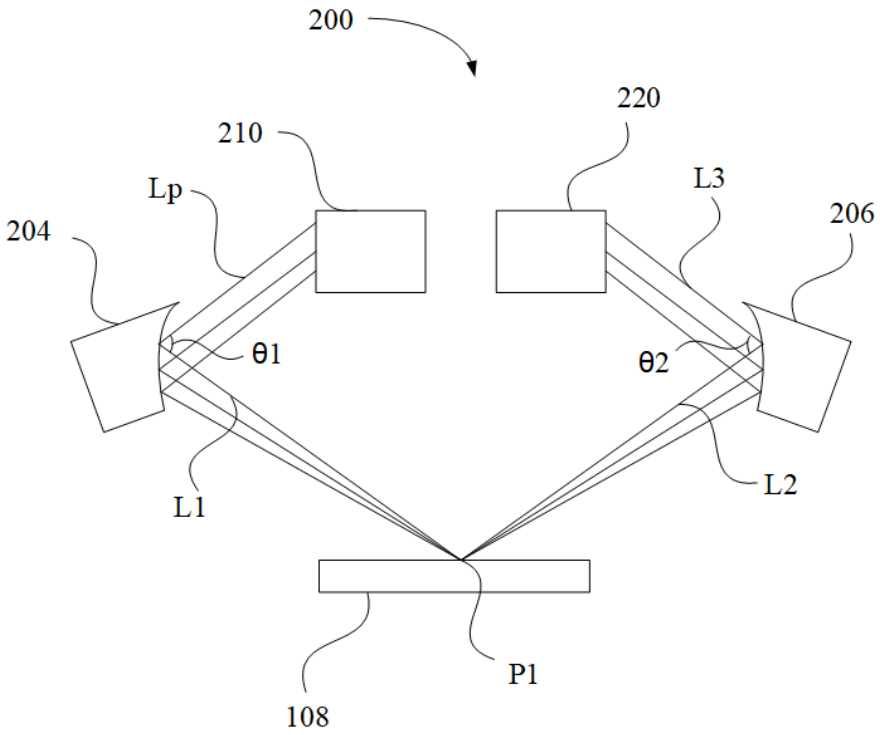

FIG. 2

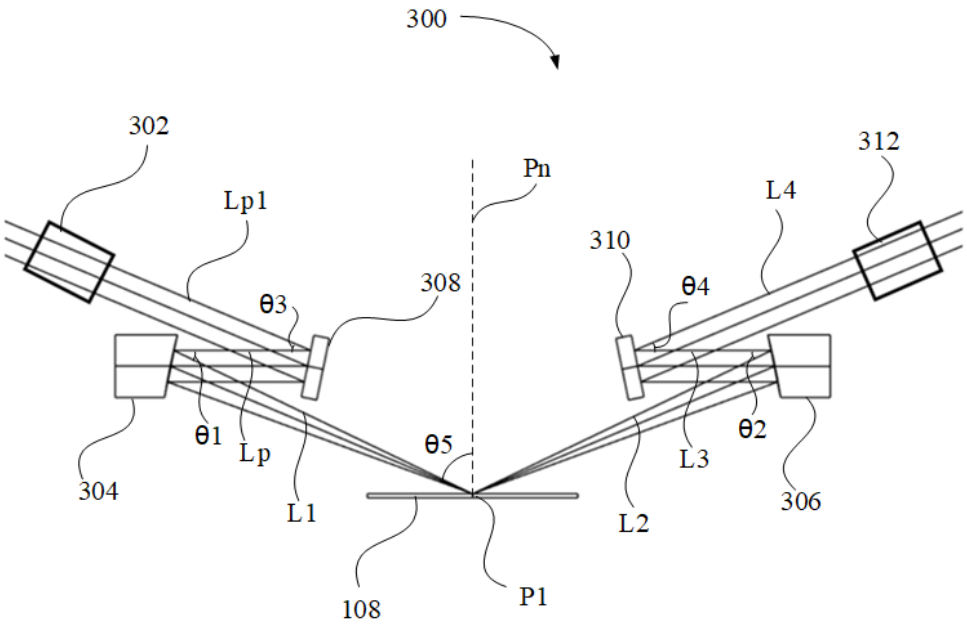
300
302
Lp1
Pn
312
L4
310
θ4
308
θ3
θ1
Lp
θ5
θ2
L3
304
L1
L2
306
108
P1

FIG. 3

Solution 1	190nm	234nm	368nm	607nm	854nm	1285nm	1900nm
Average value	1.94	1.06	**7.54**	**6.37**	**5**	4.22	3.64
Maximum value	2.17	1.19	**8.51**	**7.18**	**5.64**	4.76	4.1
Minimum value	1.74	0.95	**6.68**	**5.65**	**4.43**	3.74	3.23
Difference between the maximum value and the minimum value	0.42	0.24	1.83	1.53	1.2	1.02	0.88
Solution 2	190nm	234nm	368nm	607nm	854nm	1285nm	1900nm
Average value	1.94	1.06	8.81	7.39	5.8	4.89	4.22
Maximum value	2.17	1.19	**15.84**	**13.19**	**10.35**	8.73	7.54
Minimum value	1.74	0.95	3.93	3.32	2.61	2.2	1.9
Difference between the maximum value and the minimum value	0.42	0.24	**11.91**	**9.87**	**7.74**	6.53	5.64

FIG. 4

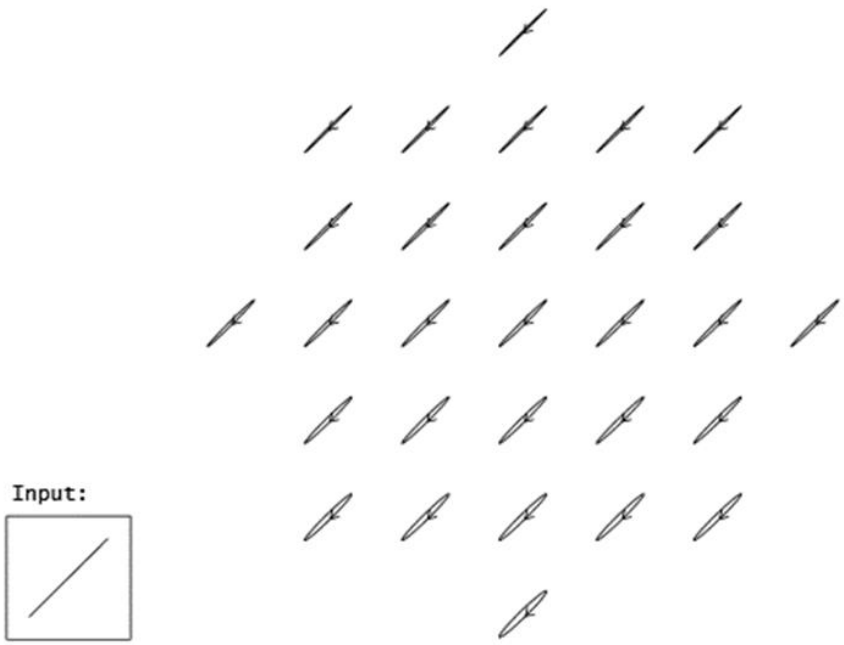

FIG. 5

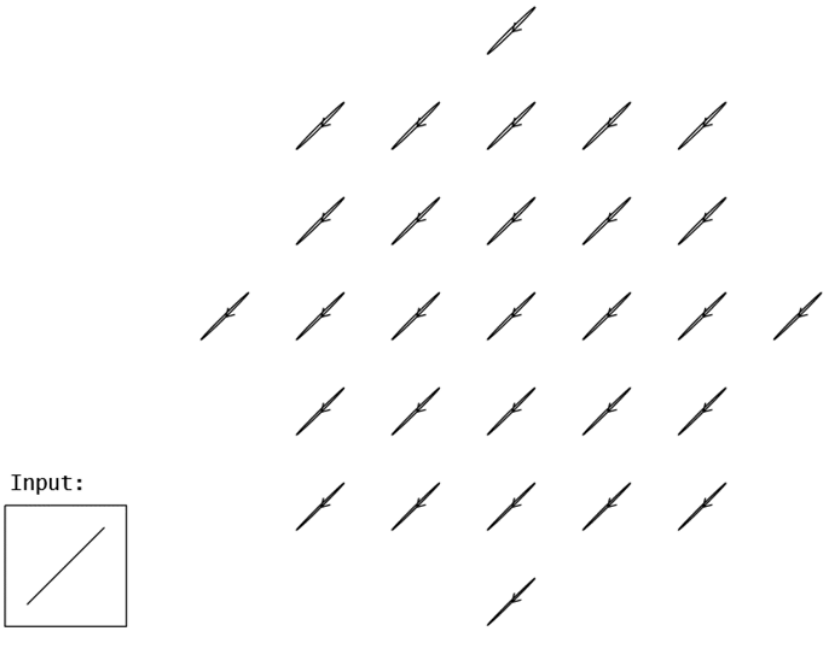

FIG. 6

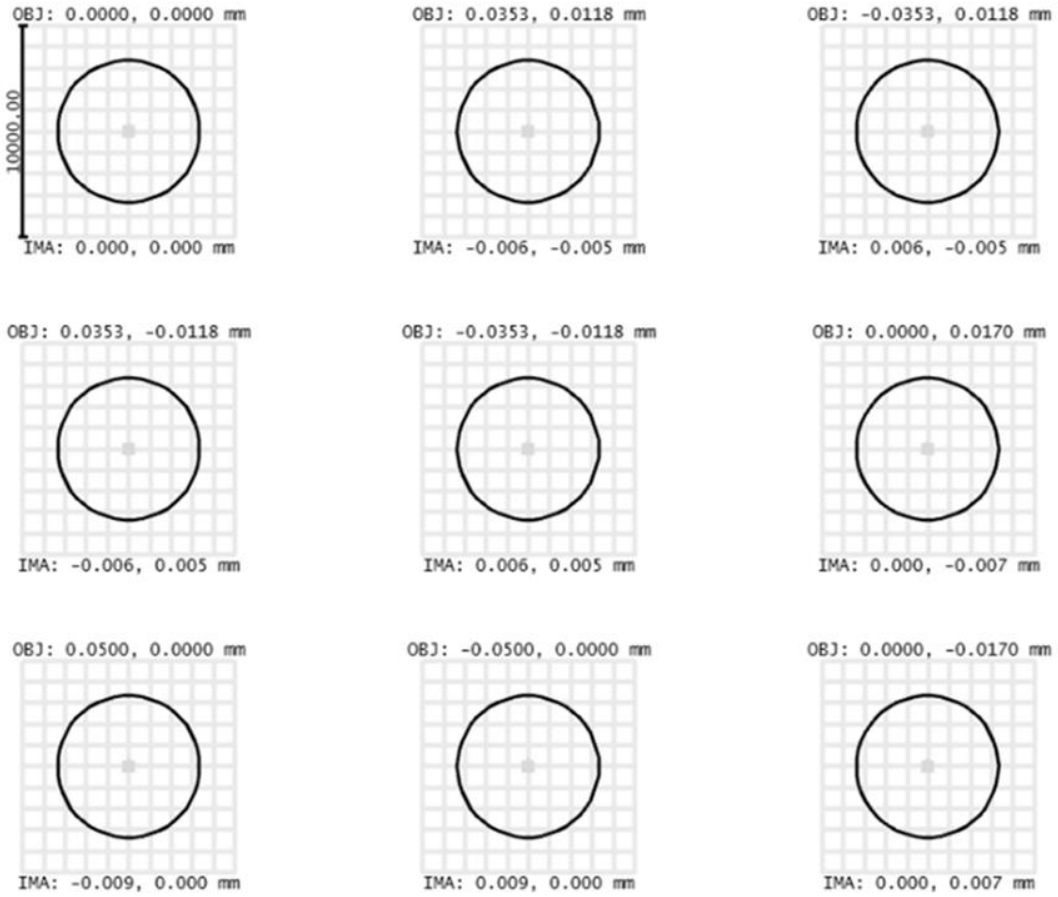
OBJ: 0.0000, 0.0000 mm
10000.00
IMA: 0.000, 0.000 mm
OBJ: 0.0353, 0.0118 mm
IMA: -0.006, -0.005 mm
OBJ: -0.0353, 0.0118 mm
IMA: 0.006, -0.005 mm
OBJ: 0.0353, -0.0118 mm
IMA: -0.006, 0.005 mm
OBJ: -0.0353, -0.0118 mm
IMA: 0.006, 0.005 mm
OBJ: 0.0000, 0.0170 mm
IMA: 0.000, -0.007 mm
OBJ: 0.0500, 0.0000 mm
IMA: -0.009, 0.000 mm
OBJ: -0.0500, 0.0000 mm
IMA: 0.009, 0.000 mm
OBJ: 0.0000, -0.0170 mm
IMA: 0.000, 0.007 mm

FIG. 7

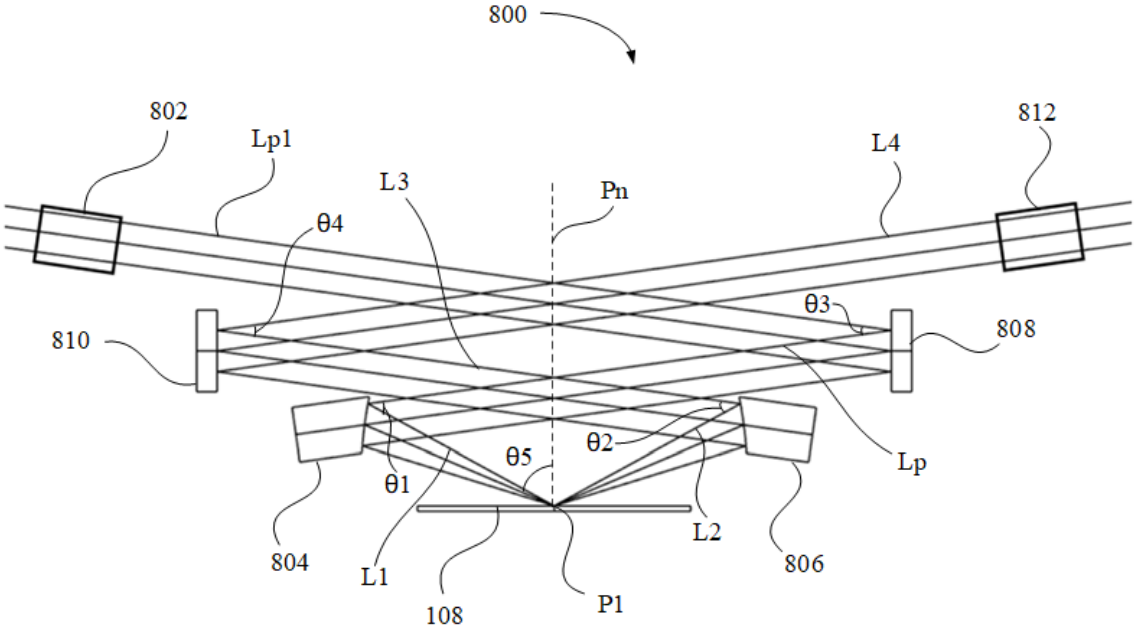
800
802
Lp1
L3
Pn
θ4
L4
812
θ3
808
810
θ5
θ2
θ1
Lp
804
L1
108
P1
L2
806

FIG. 8

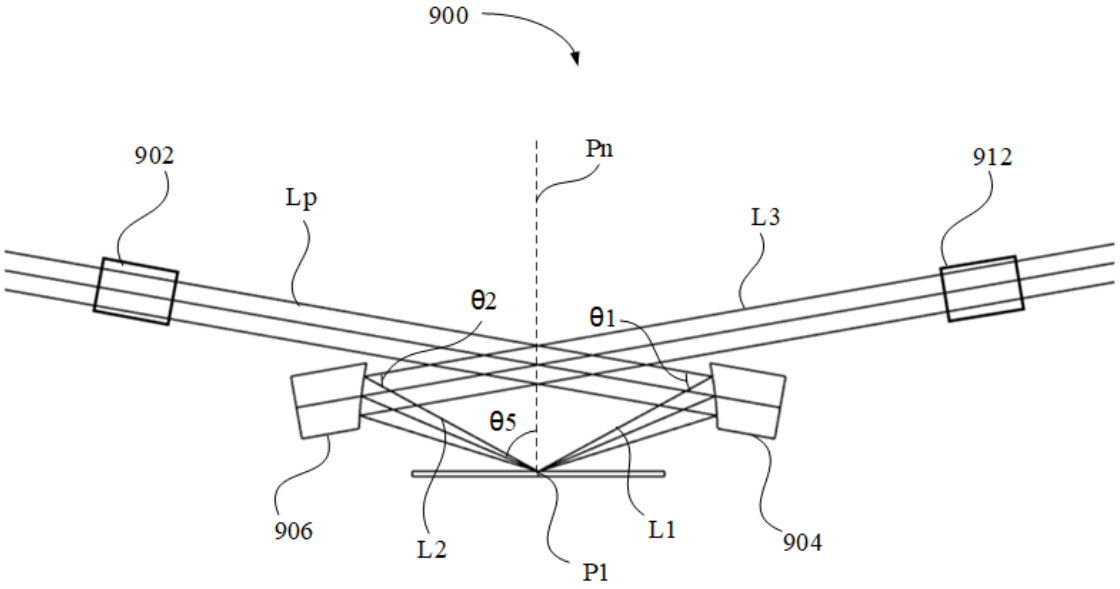
900
902
Pn
Lp
912
L3
θ2
θ1
θ5
906
L2
P1
L1
904

FIG. 9

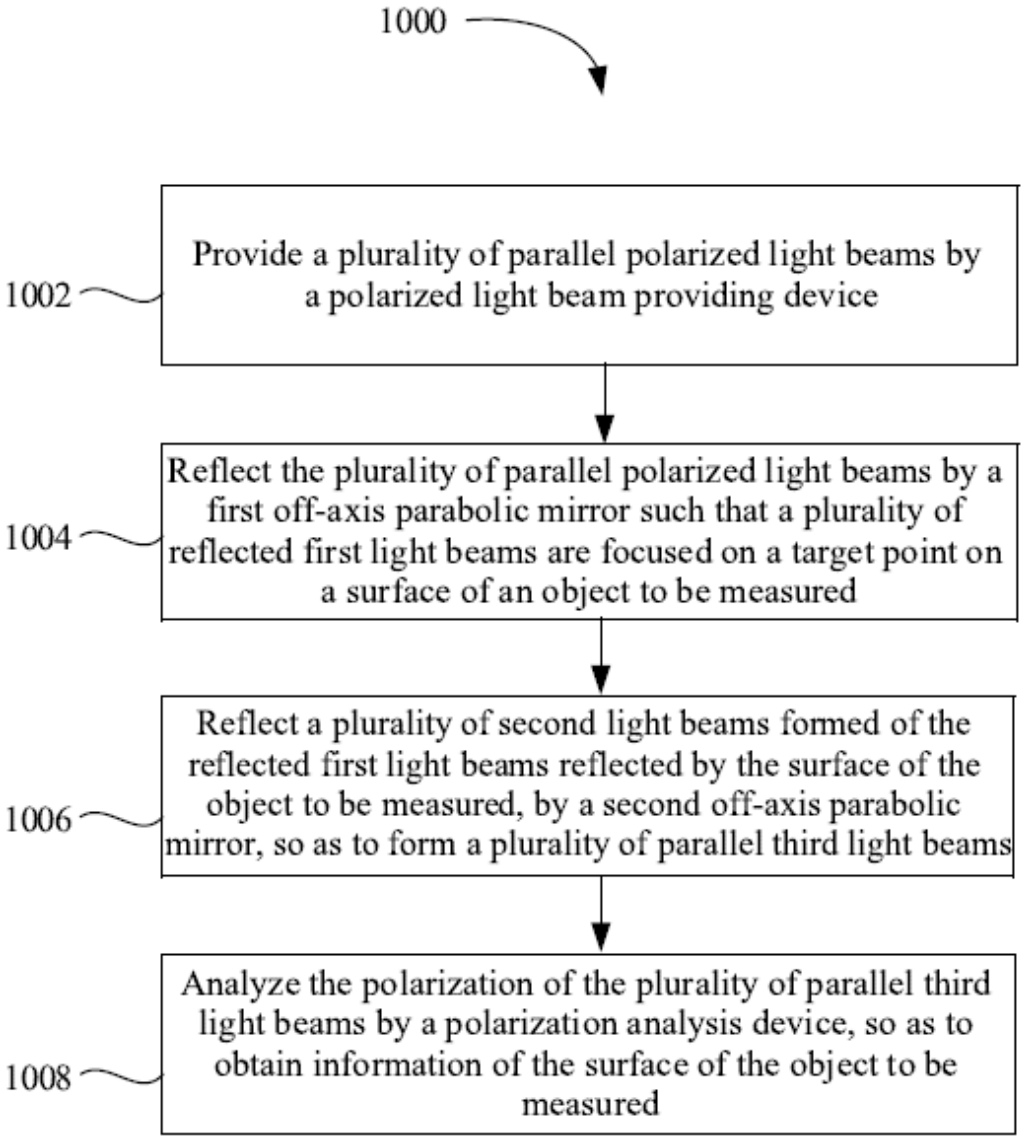
1000
Provide a plurality of parallel polarized light beams by a polarized light beam providing device
1002
Reflect the plurality of parallel polarized light beams by a first off-axis parabolic mirror such that a plurality of reflected first light beams are focused on a target point on a surface of an object to be measured
1004
Reflect a plurality of second light beams formed of the reflected first light beams reflected by the surface of the object to be measured, by a second off-axis parabolic mirror, so as to form a plurality of parallel third light beams
1006
Analyze the polarization of the plurality of parallel third light beams by a polarization analysis device, so as to obtain information of the surface of the object to be measured
1008

FIG. 10