(12) INTERNATIONAL APPLICATION PUBLISHED UNDER THE PATENT COOPERATION TREATY (PCT)

(19) World Intellectual Property Organization
International Bureau

(43) International Publication Date
25 August 2011 (25.08.2011)

PCT

(10) International Publication Number
WO 2011/102875 A1

(51) International Patent Classification:
F16L 21/06 (2006.01)

(21) International Application Number:
PCT/US2010/061790

(22) International Filing Date:
22 December 2010 (22.12.2010)

(25) Filing Language: English

(26) Publication Language: English

(30) Priority Data:
12/707,338 17 February 2010 (17.02.2010) US

(71) Applicant *(for all designated States except US)*: **VICTAULIC COMPANY** [US/US]; 4901 Kesslersville Road, Easton, PA 18040 (US).

(72) Inventors; and
(75) Inventors/Applicants *(for US only)*: **MADARA, Scott, D.** [US/US]; 309 Meyer Road, Nazareth, PA 18064 (US). **PIERCE, John, W.** [US/US]; 1035 Cressman Drive, Nazareth, PA 18064 (US). **WILK, Charles, E., Jr.** [US/US]; 6447 Woodbury Drive, Slatington, PA 18080 (US). **DOLE, Douglas, R.** [US/US]; 9 Minsi Road, Whitehouse Station, NJ 08889 (US). **PORTER, Michael, V.** [US/US]; 192 Shelley Street, Easton, PA 18045 (US).

(74) Agent: **CHIONCHIO, John A.**; Ballard Spahr LLP, 999 Peachtree Street, Suite 1000, Atlanta, GA 30309-3915 (US).

(81) Designated States *(unless otherwise indicated, for every kind of national protection available)*: AE, AG, AL, AM, AO, AT, AU, AZ, BA, BB, BG, BH, BR, BW, BY, BZ, CA, CH, CL, CN, CO, CR, CU, CZ, DE, DK, DM, DO, DZ, EC, EE, EG, ES, FI, GB, GD, GE, GH, GM, GT, HN, HR, HU, ID, IL, IN, IS, JP, KE, KG, KM, KN, KP, KR, KZ, LA, LC, LK, LR, LS, LT, LU, LY, MA, MD, ME, MG, MK, MN, MW, MX, MY, MZ, NA, NG, NI, NO, NZ, OM, PE, PG, PH, PL, PT, RO, RS, RU, SC, SD, SE, SG, SK, SL, SM, ST, SV, SY, TH, TJ, TM, TN, TR, TT, TZ, UA, UG, US, UZ, VC, VN, ZA, ZM, ZW.

(84) Designated States *(unless otherwise indicated, for every kind of regional protection available)*: ARIPO (BW, GH, GM, KE, LR, LS, MW, MZ, NA, SD, SL, SZ, TZ, UG, ZM, ZW), Eurasian (AM, AZ, BY, KG, KZ, MD, RU, TJ, TM), European (AL, AT, BE, BG, CH, CY, CZ, DE, DK, EE, ES, FI, FR, GB, GR, HR, HU, IE, IS, IT, LT, LU, LV, MC, MK, MT, NL, NO, PL, PT, RO, RS, SE, SI, SK, SM, TR), OAPI (BF, BJ, CF, CG, CI, CM, GA, GN, GQ, GW, ML, MR, NE, SN, TD, TG).

[Continued on next page]

(54) Title: COUPLING HAVING ANGULARLY ORIENTED KEY SURFACES

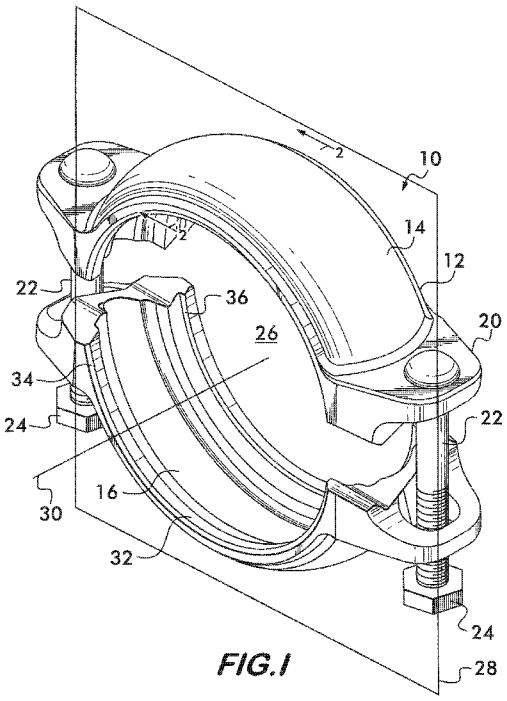

FIG.1

(57) Abstract: A mechanical pipe coupling is formed of segments attached end to end to surround a central space. Each segment has arcuate keys which project toward the central space. Each key is formed of a pair of side surfaces and a mid surface between them. The mid surface is angularly oriented relative to a longitudinal axis perpendicular to a plane containing the segments. When used to couple pipe elements having grooves the angular orientation of the mid surfaces provides flexibility to the joint. A method of joining pipe elements end to end is also disclosed.

WO 2011/102875 A1

Published:

— *with international search report (Art. 21(3))*