(12) INTERNATIONAL APPLICATION PUBLISHED UNDER THE PATENT COOPERATION TREATY (PCT)

(19) World Intellectual Property Organization
International Bureau

(43) International Publication Date
19 November 2009 (19.11.2009)

PCT

(10) International Publication Number
WO 2009/139799 A1

(51) International Patent Classification:
G02B 27/10 (2006.01) *G02B 27/28* (2006.01)

(21) International Application Number:
PCT/US2008/088020

(22) International Filing Date:
22 December 2008 (22.12.2008)

(25) Filing Language: English

(26) Publication Language: English

(30) Priority Data:
61/053,288 15 May 2008 (15.05.2008) US
61/095,146 8 September 2008 (08.09.2008) US

(71) Applicant *(for all designated States except US)*: **3M INNOVATIVE PROPERTIES COMPANY** [US/US]; 3M Center, Post Office Box 33427, Saint Paul, MN 55133-3427 (US).

(72) Inventors; and
(75) Inventors/Applicants *(for US only)*: **MAGARILL, Simon** [US/US]; 9836 Orchardclub Drive, Cincinnati, OH 45242 (US). **BRUZZONE, Charles, L.** [US/US]; 3M Center, Post Office Box 33427, Saint Paul, MN 55133-3427 (US). **OUDERKIRK, Andrew, J.** [US/SG]; 1 Yishun Avenue 7, Singapore 768923 (SG).

(74) Agents: **HEITI, Robert, V.** et al.; 3M Center, Office of Intellectual Property Counsel Post Office Box 33427, Saint Paul, MN 55133-3427 (US).

(81) Designated States *(unless otherwise indicated, for every kind of national protection available)*: AE, AG, AL, AM, AO, AT, AU, AZ, BA, BB, BG, BH, BR, BW, BY, BZ, CA, CH, CN, CO, CR, CU, CZ, DE, DK, DM, DO, DZ, EC, EE, EG, ES, FI, GB, GD, GE, GH, GM, GT, HN, HR, HU, ID, IL, IN, IS, JP, KE, KG, KM, KN, KP, KR, KZ, LA, LC, LK, LR, LS, LT, LU, LY, MA, MD, ME, MG, MK, MN, MW, MX, MY, MZ, NA, NG, NI, NO, NZ, OM, PG, PH, PL, PT, RO, RS, RU, SC, SD, SE, SG, SK, SL, SM, ST, SV, SY, TJ, TM, TN, TR, TT, TZ, UA, UG, US, UZ, VC, VN, ZA, ZM, ZW.

(84) Designated States *(unless otherwise indicated, for every kind of regional protection available)*: ARIPO (BW, GH, GM, KE, LS, MW, MZ, NA, SD, SL, SZ, TZ, UG, ZM, ZW), Eurasian (AM, AZ, BY, KG, KZ, MD, RU, TJ, TM), European (AT, BE, BG, CH, CY, CZ, DE, DK, EE, ES, FI, FR, GB, GR, HR, HU, IE, IS, IT, LT, LU, LV, MC, MT, NL, NO, PL, PT, RO, SE, SI, SK, TR), OAPI (BF, BJ, CF, CG, CI, CM, GA, GN, GQ, GW, ML, MR, NE, SN, TD, TG).

Declarations under Rule 4.17:

— *as to applicant's entitlement to apply for and be granted a patent (Rule 4.17(ii))*

— *as to the applicant's entitlement to claim the priority of the earlier application (Rule 4.17(iii))*

[Continued on next page]

(54) Title: OPTICAL ELEMENT AND COLOR COMBINER

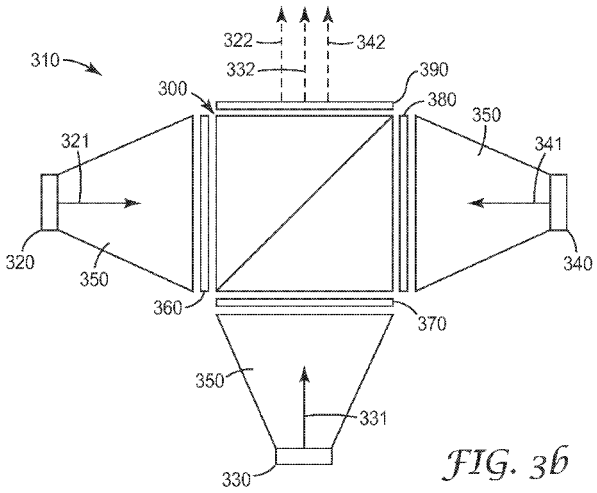

FIG. 3b

(57) Abstract: Optical elements, color combiners using the optical elements, and image projectors using the color combiners are described. The optical element includes light recycling stacks, a polarizing beam splitter, and a color-selective stacked retardation polarizing filter. The polarizing beam splitter includes a first reflective polarizer aligned to a first polarization direction. Each light recycling stack includes a second reflective polarizer aligned to the first polarization direction, and a retarder aligned at 45 degrees to the first polarization direction. The color combiner includes partially reflective light sources coupled to the optical element. Unpolarized light having different colors can enter the color combiner through the light recycling stacks, and combined light of a desired polarization state can exit the color combiner. Light having an undesired polarization state can be recycled to the desired polarization state within the color combiner, so that light utilization efficiency is increased. The image projector includes a color combiner coupled to an imaging source and projection elements, so that a first portion of the combined light is directed to the projection element, and a second portion of the combined light is recycled back into the color combiner.

WO 2009/139799 A1

Published:

— *with international search report (Art. 21(3))*