9704180-0
1P05

THIS SHEET HAS BEEN REPLACED

ECOSPACE

AUTOMOTIVE STORED - POWER AIR-CONDITIONING SYSTEM

INTRODUCTION

Contemporary technology do not facilitate motorists to operate the automotive aircon without the operation of the engine. Usually without engine power, the motorist will just get air - from the fan, without any chill. There are situations (as will be mentioned in this paper), for the desire for the aircon to be operational when the engine is off.

This paper covers a general overview description of the Ecospace Stored-Power-Air-Conditioning (SPAC) System. Detailing the current problems faced by motorists, the Concept-Plan and technology of the SPAC System, and how it offers a solution which addresses to the requirements of the motorists.

The term "automotive" herein refers to mean cars, vans, buses etc.

PRINCIPLE CONCEPT

The Ecospace SPAC System works on the principle of using energy stored in a **secondary battery** (separate from the main automotive battery), to drive the **aircon compressor** by means of an **electric motor** in the absence of **engine power**.

The result of this operates the aircon system to produce chilled air without the need to run the engine.

The stored energy is derived from the **charging process** when the engine is running. The re-capturing of this "free energy" maximises the kinetics & fuel utility of the automotive.

CURRENT PROBLEMS

Problems with conventional automotive aircon systems:-

This Sheet Has Been Replaced

Engine Overheat

Use of aircon (under engine power) with stationary automotive over prolonged period cause overheating and can lead to engine system damage.

Danger to Children

A "live" automotive (engine running) - to keep aircon operational, pose a danger to unattended children left in the automotive, and also to pedestrians. By some accident, there can be a runaway automotive without a driver in control. Automatic-transmission automotive are especially vulnerable.

Flammable Hazard

Automotive that keep engine running - to operate the aircon so as to keep the passengers comfortable, while filling up at petrol station, is a danger. This goes against the recommended safety rules set up by the authorities.

Energy Wastage

Burning fuel to cool the automotive interior - to pre-cool, or while waiting in the automotive, is a bad practice of wasting precious energy.

Noise Pollution

Running the engine - to operate the aircon, generate noise. Especially large automotive with large engine. The pollution is most apparent with a waiting automotive. For example, a travel-coach keeping cool while waiting for its passengers.

Oven Effect

Without preconditioning the automotive interior temperature. The accumulated heat (for a tropical environment), after the automotive has been left under the sun for some time, can be

unbearably uncomfortable for it to be used instantly. The interior temperature can soar way above the outside temperature. This cause an "oven-effect" which deteriorates the automotive interior much faster, as well as things left within its compartment.

The conventional way to overcome this problem - as some motorist do, is to leave an open-gap at the windows to allow some air-circulation. But this expose the automotive the subjection of rain and theft. Another common practice of opening up all doors to allow the accumulated heat to disperse, is time consuming to the motorist. It takes also a longer time for the conventional aircon to come into effect.

Cold Engine

Motorist either suffer a "reluctant automotive", or the discomfort to do without the aircon, when moving out on a cold-engine. The "jerky" sensation is the result of the aircon compressor taking a load on the engine. Most motorist follow the mythical practice to turn off their aircon when moving out on a cold engine - under their perceived fear of inflicting damage to the engine, if they operated it otherwise - in a long run.

Opposite to Benefits

All other aspects in reverse of the benefits of using the SPAC System.

BENEFITS OF ECOSPACE SPAC SYSTEM

Aircon w/o Engine

Aircon operation at engine idle. Cool or warm the automotive interior without engine power.

Waiting at no Expense

Waiting in an ecological friendly automotive space compartment provides:-

- Money Savings. No wastage of fuel as no engine operation is required.
- Protection of Environment. No exhaust released to cause unnecessary pollution to the air.
- Save Depletion of Earth's Natural Fossil Fuel.
- Comfort

Support to Governments & Environmentalists

Add support to the global efforts to contain pollution, and saving of energy.

Maximise Engine Power

Facilitate maximising of engine power for steep climb - especially for smaller capacity automotive. Ecospace SPAC System can take over the running of the aircon, releasing engine load to compensate for higher power needed for demanding situations.

Emergency Power Backup Server

Ecospace SPAC System stored-power can be tapped - at a flip of a switch, in the event of a "flat" on the main battery. This will save the motorist the anxiety of a failed battery - which is common, and allow the continue use of the automotive, for the motorist to seek rectification to the fault.

Free Comfort

The Ecospace SPAC System concept, utilises stored-energy derived from the engine's kinetic energy - which otherwise if not captured, will be lost anyway.

Payback

Recovery of Investment on the installation of Ecospace SPAC System. The amount of fuel that will, and continue to be saved is a payback. Or, the cost of fuel that would have been lost if the system was not installed, is another measure.

Quiet

An automotive operating on SPAC mode is relatively much quieter - since this is without running an engine. This provides a more pleasant environment for the waiting passengers within, as well as the neighbourhood.

Value Add Functions

In the comfort of an Ecospace SPAC System Environment (engine off), the followings (not limited to), are possible:-

- Allow the enjoyment of **High-Fidelity Sound System** without fearing the drain on the main battery. In a confined quiet compartment, the quality of sound can be exhilarating.
- **Mobile Office**. The future trend for the busy business people on the move. The Ecospaced automotive is an answer of the Mobile Office - where computers, fax, telecommunications etc., can be operated independently of the automotive system. Business can be done on site to gain the competitiveness of speed.

Preconditioning

The Ecospace SPAC System facilitates the Preconditioning of automotive interior temperature before use.

No Drain

SPAC System does not drain the automotive battery.

Uninstallation

For non-factory-fitted SPAC System automotive.

The installation and uninstallation of the SPAC System does not cause damage to the automotive aircon system.

Not SPAC

An aircon electric vehicle is not the same as a SPAC equipped vehicle. Although theoretically, an electric vehicle uses stored electricity to power its aircon, the electric vehicle however must receive its charge from the **electrical mains**. This is just a transfer from one source of energy to another indirect channel of the same energy. Because most power stations consume natural resources in generating electrical energy supply.

Unlike electric vehicle, SPAC System is about free energy.

Temperature Continuity

The SPAC System can be programmed to automatically take over - once the engine is switched off, to keep the aircon running for preset length of time. This will maintain the temperature, so that if the motorist returns to use the automotive within the preset time, the motorist can enjoy the continuity of an inviting cool/warm environment, waiting to receive him/her.

BENEFITS OF ECOSPACE SPAC SYSTEM

Power Pickup

Allows the automotive to maximise engine power for pickup from standstill. This reduces the "sluggishness" motorists experience when picking-up fro standstill with the aircon on. Which is caused by the aircon compressor sharing a load on the engine, during normal aircon operation.

The Ecospace Spac System can be programmed to run on "Power Pickup Mode". At this mode, the SPAC and Normal aircon systems both operate simultaneously, but in alternation to each other.

Basing on the computation of preset factors of time and speed. The Ecospace SPAC System overwrites operation at automotive standstill, thus releasing the engine fully to power the pickup. The system will revert control back to the normal aircon operation, after the automotive has reached a certain preset speed.

A Speed-Gauge device is a component to this feature.

COMPONENTS

The basic components of the Ecospace SPAC System comprises:-

(1) **Compressor Unit**

- **Original Ecospace SPAC Compressor**

  This can be in the form of an electric-motor-driven-compressor which can also be separately driven by the automotive engine power by means of a transmission belt.

  OR

- **Ecospace SPAC Compressor Driver Attachment**

This Attachment is fitted to the existing automotive aircon compressor. The Attachment takes the form of a Twin-Flywheel, driven independently of each other, either by the engine, or the electric motor.

(2) **Transmitter**

- **Belt**

Connecting the electric motor flywheel to the Compressor Unit.

OR

- **Direct Drive Coupler**

A device attaching the electric motor directly to the compressor.

(3) **Electric Motor**

(4) **Controller Module**

The circuitry of this module controls the function of the various system components.

(5) **Remote Commander**

This is perhaps the only "visual" component of the Ecospace SPAC System - to be use by the motorist. It is to be located in the automotive passenger compartment, to make settings (e.g. timing) for the system.

(6) **Hour Pack Modules (HPM)**

These are dry/wet battery cells.

(7) **Alternator**

- **Original Ecospace SPAC Alternator**

  A high capacity dynamo.

  or

- **Existing Alternator**

  or

- **Additional Alternator**

  A conventional alternator piggy-mounted with the existing alternator.

(8) **HPM Rack**

This is a mounting rack for the HPMs. It incorporates a Parallel-Power-Bus to facilitate easy mounting & dismounting of the HPMs.

(9) **Engine-Run Sensor**

Detect "engine-run" to determine whether to activate SPAC System, or to operate normal aircon system.

FEATURES

Remote Commander

It displays:-

- Time Settings
- Interior Temperature
- Level-Meter indicating stored-power level

Emergency Power Switch

This switch is located on the Remote Commander to activate the SPAC System as a Backup-Power-Server. The signal sent to the Controller Module make a crossover connection to succeed the function of the primary battery.

Autoswitch and Manual-Overwrite Function

This function is located on the Remote Commander.

- **Autoswitch Mode**

  Automatically set the automotive aircon system to run on SPAC when engine is idle, and on conventional method when the engine is operational.

- **Manual-Overwrite Mode**

  Default the automotive aircon system to run only on SPAC regardless whether engine is operational or not. This function is used in situations (like steep climb) when maximum engine power is required, or when moving off on cold engine, etc.

Same Switch Operation

The Ecospace SPAC System works in complement to the normal operations of the original same-switches provided in the automotive for the control of temperature, fan-speed, and ventilation.

DESIGN

Green-Backlight LCD Panel

Featured on Remote Commander for Motorist to interface with the SPAC System. Green colour chosen to signify "environmental friendliness".

Colour Timer

Use for control of SPAC System. Especially in Preconditioning.

Basic-Unit Package

Ecospace SPAC 2997 System will be sold in a Basic-Unit Package form, complete with a Starter-HPM, and installation accessories.

- Each system set is packed in an **attractive carton** suitable for **Off-The-Shelf Sales** (ready for installation).

Modular Power

HPM (Hour Pack Module) will be sold separately as additional optional addons to the SPAC System to increase its operational capacity.

Design Packaging

All Ecospace components are packaged in its distinguishable packaging design.

As Upgrade Kit

Ecospace SPAC System is designed to be sold as an upgrade to the motorist's existing aircon system. Not as a modification.

Uninstall

This is a feature incorporated into the Ecospace SPAC System design. The Uninstallation (if so required), will just reinstate the normal aircon operation back in place, without any caused of handicap to the system.

Auxiliary Power Import

A weatherproof Receptor (Optional Accessory), can be mounted on the undercarriage of the automotive, to receive external electrical power to charge the HPMs, or simultaneously operating the SPAC environment.

OEM Components

Ecospace SPAC System components are also available on OEM basis to automotive manufacturers, for factory fitting as original parts.

Future Extensions

Use of Solar Panels (Optional Accessories) as a Secondary Passive Charger, while the automotive is idle.

ENGINEERING

Battery Technology

HPMs uses available contemporary battery technology like those operating electric vehicles. Batteries are either wet or dry. Examples are Lead-Acid and Zinc-Air Batteries.

SPAC-Disc Technology

The Ecospace SPAC Compressor Driver Attachment uses the technology of a Twin-Independent-Ratchet-Gear-Flywheel. A lesser form of this technology can be illustrated similar to that of a bicycle transmission gear.

Cooling Fan

The Radiator Fan - of the existing aircon system, will work as normal.

PERFORMANCE SPECIFICATION

SPAC Time

The operational duration capacity of the SPAC System, depends on the number of HPMs installed.

Aircon Performance

Ecospace SPAC System does not determine the level of coolness/warm of the automotive aircon system. How cool/warm depends on the performance of the existing aircon system.

CONCLUSION

The Ecospace SPAC System offers an innovative and unique answer to **SATISFY TO AN IDENTIFIED NEED** of the consumer motorist. Basing on this fundamental marketing principle, the Ecospace SPAC system has an extremely strong factor for success.

In the future, there is potential that all automotive will be built with a SPAC System as a **Standard Feature**.

ECOSPACE - AUTOMOTIVE STORED-POWER AIR-CONDITIONING SYSTEM

CLAIMS

1. An automobile airconditioning system (the "SPAC System") that utilises stored energy derived from the automobile engine's kinetic energy. It can be activated irregardless of whether the automobile engine is running and comprises the following components:-

a. compressor unit

The compressor unit is installed either as:-

(i) a compressor unit with a built-in electric motor ("SPAC Compressor") which is also capable of being separately driven by the automobile engine; or

(ii) the existing automobile aircon compressor which is modified by the addition of a twin-flywheel mechanism.

b. electric motor

The electric motor drives the compressor unit and can be used irregardless of whether the automobile engine is running.

c. transmitter

The transmitter is the mechanism by which the electric motor drives the compressor and comes in either of two forms:-

(i) where the SPAC Compressor is installed, the transmitter is in the form of a direct drive coupler; or

(ii) where the existing car air-condition compressor unit is used, it is in the form of a belt connected to the electric motor. The belt is connected to the twin-flywheel mechanism attached to the compressor unit.

d. controller module

It controls the operation and function of the various components of the system.

e. remote commander

* C L M S *

It is used to program settings by the user into the controller module and complements the normal system in the automobile for the control of the temperature, fan speed and ventilation. It has an automatic mode to set the aircondition/heating system to run on SPAC when the engine is off and on the conventional way when the engine is started and running. It also has a manual overide mode to activate the SPAC System while the engine is running to facilitate better automobile performance (see paragraphs 9 and 10 below).

f. Hour Pack Modules ("HPM")

These are rechargeable wet/dry battery cells to power the components of the aircondition system under SPAC control. They would be specially designed to be placed in parallel formation in the HPM Rack. They are separate from the primary car battery. The HPMs store the electrical energy generated by the automobile engine when it is running, by means of an alternator described in sub-paragraph (g) below. The HPMs will utilise existing wet or dry battery technology eg lead-acid/zinc-air batteries.

g. alternator

The alternator can be installed in any of three forms:-

(i) a high capacity dynamo capable of producing a higher electrical current output than a normal alternator; or

(ii) as the existing automobile alternator; or

(iii) conventional alternator piggy mounted with the existing alternator.

h. HPM rack

This is a mounting rack for the HPMs, incorporating parallel conductor tracks to facilitate easy mounting and dismounting of the HPMs.

i. Engine run sensor

The function of the engine-run sensor is to detect whether the automobile engine is running. The control module, depending on the settings programmed into it, determines when to activate the SPAC System.

j. existing heating/cooling system

The SPAC System works in conjunction with the existing heating/cooling air-conditioning system of the automobile, with the addition/replacement of the equipment described above.

k. auxillary power import

* C L M S *

an optional weather proof receptor which can be mounted on the undercarriage of the automobile to receive external electrical power to charge the HPMs or to power the SPAC System.

2. The SPAC System produces heated or chilled air when activated. This is basically done by the SPAC Compressor (for chilled air) or the heating element (for heated air) which is powered by the HPMs. Settings are programmed by the remote commander into the control module which controls the SPAC System. The HPMs store electrical charge derived from kinetic energy from the car's engine while it is running by means of the alternator in one of three forms described in paragraph 1(g) above. The SPAC system can be programmed to activate itself automatically when the car engine is switched off.

3. The SPAC Compressor is in the form of a single unit and comprises a compressor unit to which is attached a built-in electric motor. The electric motor drives the compressor unit via a direct drive coupler.

When the car engine is running without the manual overide or Power Pick-up Function (described in paragraphs 9 and 10 below):-

(a) the SPAC Compressor unit performs like a conventional compressor unit, producing chilled air;

(b) in the case of heating, the heating element is powered by the primary battery as normally;

(c) the electric motor is inactive.

When the car engine is switched off, or under manual override or Power Pick-Up Function, the electric motor in the SPAC Compressor is activated and powered by the HPMs, driving the compressor via a direct drive coupler.

4. The direct drive coupler is the mechanism by which the electric motor drives the compressor unit in the SPAC Compressor.

5. Energy to power the SPAC System is derived from the charging process when the automobile's engine is running. The kinetic energy from the engine is stored in the HPMs by means of the alternator (see paragraph 1(g) above). The re-capturing of this "free energy" maximises the kinerics and fuel utility of the automobile. The HPMs use existing battery technology. Batteries are either wet or dry. Examples are lead-acid and zinc-air batteries.

6. The HPM rack is designed to have the HPMs attached in parallel, providing for the attachment/detachment of individual HPM units.

* C L M S *

7. Where a conventional compressor is used in the SPAC System, it can be modified by the attachment of a twin-independent-ratchet gear flywheel. The twin-flywheels are driven independently of each other, one by the engine and the other by the electric motor. This is to enable the electric motor to drive the conventional compressor when the automobile engine is switched off. One of the flywheels is connected to the automobile engine and the other to the electric motor.

8. The SPAC System will reduce/eliminate problems relating to the following:-

(a) engine overheating - where use of airconditioning under engine power in a stationary automobile over a prolonged period can lead to engine system damage. The SPAC System operates the airconditon/heater without the use of the engine;

(b) automobile interior temperature continuity - The SPAC System can be programmed to keep the airconditioner running for a preset period of time after the occupants leave the automobile, maintaining the interior temperature so that if the occupants return within the preset time, temperature continuity is enjoyed, with the benefits being described in the following paragraphs

(c) energy wastage - where burning fuel to heat/cool the interior of the automobile to obtain the desired temperatures wastes energy than if the SPAC System was utilised. In tropical/hot climates it would take much longer time to achieve a desired temperature without preconditioning because of the oven-effect. The SPAC System eliminates the oven-effect by providing constant cool airconditioning even when the automobile is left unattended in the sun. Additional fuel that is required to be burned to cool the automobile before use is saved.

(d) no pollution from engine fumes - The SPAC System utilises energy from "clean" source, giving no pollution. In fact by saving fuel used to achieve desired temperatures pollution is reduced. Also where automobile is stationary, SPAC System can be activated, keeping the automobile's occupants cool, yet saving fuel and no pollution from engine fumes and noise;

(e) save fuel - The SPAC System would save the additional fuel required to be burned to achieve the desired temperatures in conventional airconditioning systems in cases where occupants have left their automobiles in climates for periods of time and have returned and require the interior temperature of the automobile to be returned to a comfortable temperature.

(f) emergency power backup - SPAC System stored power can be tapped at the flip of the switch in the event of a "flat" on the main automobile battery.

(g) economy - SPAC Systems will generate savings in terms of costs from reduction of fuel usage.

* C L M S *

(h) danger to children - engines left running to run the airconditioner/heater while the automobile is stationary can pose a danger to children left unattended in the automobile, especially those with automatic transmission. The SPAC System operates without the use of the engine, reducing the danger to children.

(i) flammable hazard - automobiles that keep the engine running to operate the airconditioner/heater to keep passengers comfortable while filling up at a petrol station pose a danger due to flamability of petrol.The SPAC System operates without the use of the engine, eliminating the hazard.

(j) noise pollution - running the engine to operate the airconditioner/heater generates noise, espeially large automobiles with large engines, eg tour buses. The SPAC System operates the airconditioner/heater without the use of the engine, thus drastically reducing noise.

9. The SPAC System can be utilised to facilitate maximising engine power e.g. for a steep climb. At the flip of a switch, the SPAC System can be turned on to take over the function of the airconditioner/heater, releasing the engine load to compensate for higher power needed for demanding situations.

10. The SPAC Sysyem will alow the user to maximise engine power for acceleration from standstill. This reduces the "sluggishness" experienced when accelerating from standstill with the airconditioner on which is caused by the aircondition compressor sharing a load on the engine during the conventional operation of the airconditioner. The SPAC System can be programmed to run on "Power Pick-up Mode" during which the SPAC and normal sysyem both operate together simultaneously but in alternation to each other. The SPAC System operates the aicondition system at standstill, allowing the engine to fully power the acceleration of the automobile. The SPAC System can be programmed to revert control back to the conventional operation after a certain time and/or after the automobile has reached a certain speed. A speed gauge device is a component of this feature.

11. The power stored in the SPAC System can also be tapped at the flip of a switch, in the event of a "flat" on the main battery. This will save the motorist the anxiety of experiencing a flat battery and allow continued use of the automobile for the motorist to seek rectification to the fault.

12. The SPACS System can be utilised to power other systems requiring power that would otherwise impose a load on the primary battery, eg mobile office systems like computers, fax machines and communications equipment, and hi-fi equipment. This would free the primary battery to be used for the normal operations of the automobile.

13. The SPAC System utilises free energy stored from the automobile engine's kinetic energy which if otherwise not captured will be lost anyway.

14. The SPAC System can be installed either as a basic unit package as an upgrade to the existing aircondition/heating system. The SPAC System can also be designed for factory fitting as original parts to automobile manufacturers.



15. The SPAC System can utilise solar energy by the use of solar panels as a secondary passive charger.

ECOSPACE - AUTOMOTIVE STORED-POWER AIR-CONDITIONING SYSTEM

ABSTRACT

The invention relates to an automobile airconditoning system ("SPAC System") that operates irrespetive of whether the automobile engine is running or not. The SPAC System concept utilises stored energy derived from the automobile engine's kinetic energy which if otherwise not captured is lost. In the SPAC System, the aircondition system (for chilled or heated air) is driven by means of an electric motor in the absence of engine power, producing chilled air or heating element producing heated air. The energy to run the electric motor or heating element is generated and stored in wet/dry cell battery modules when the automobile engine is running. The system comprises (1) a compressor (being dual driven independently either by an electric motor or the automobile engine) or a twin flywheel attachment (to the existing automobile compressor), (2) a transmitter, (3) an electric motor (4) controller module, (5) remote commander, (6) hour pack modules (HPM) (comprising wet/dry battery packs) (7) alternator, (8) HPM rack and (9) engine run sensor. The SPAC system works in conjunction with the existing airconditioning system of the automobile, which may incorporated heating facility.

THIS SHEET HAS BEEN REPLACED

990480-0 (001)

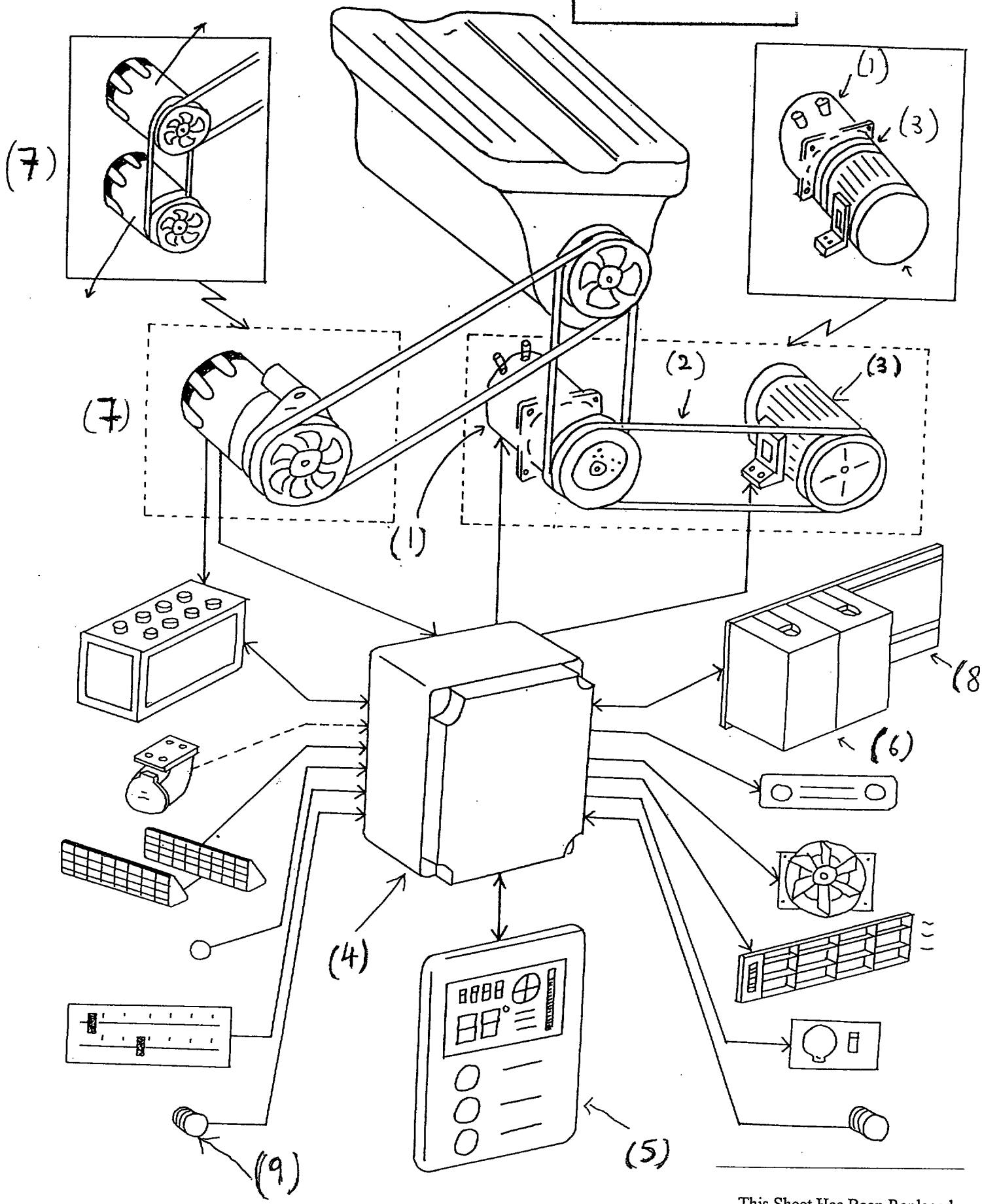

This Sheet Has Been Replaced

ECOSPACE

AUTOMOTIVE STORED - POWER AIR-CONDITIONING SYSTEM

INTRODUCTION

Contemporary technology do not facilitate motorists to operate the automotive aircon without the operation of the engine. Usually without engine power, the motorist will just get air - from the fan, without any chill. There are situations (as will be mentioned in this paper), for the desire for the aircon to be operational when the engine is off.

This paper covers a general overview description of the Ecospace Stored-Power-Air-Conditioning (SPAC) System. Detailing the current problems faced by motorists, the Concept-Plan and technology of the SPAC System, and how it offers a solution which addresses to the requirements of the motorists.

The term "automotive" herein refers to mean cars, vans, buses etc.

PRINCIPLE CONCEPT

The Ecospace SPAC System works on the principle of using energy stored in a **secondary battery** (separate from the main automotive battery), to drive the **aircon compressor** by means of an **electric motor** in the absence of **engine power**.

The result of this operates the aircon system to produce chilled air without the need to run the engine.

The stored energy is derived from the **charging process** when the engine is running. The re-capturing of this "free energy" maximises the kinetics & fuel utility of the automotive.

CURRENT PROBLEMS

Problems with conventional automotive aircon systems:-

This is the replacement sheet

Date: 05 JUN 1998

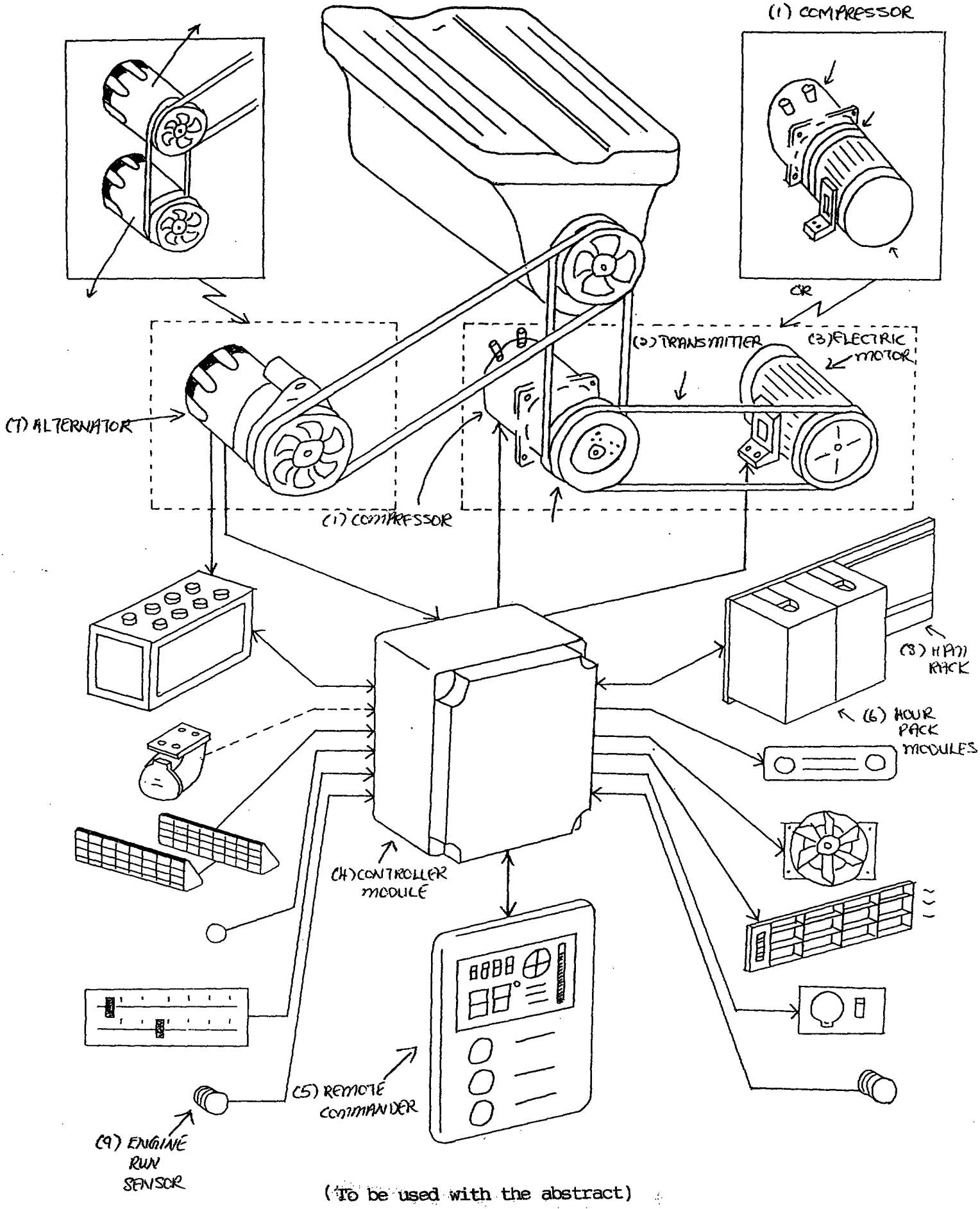

(To be used with the abstract)