(12) INTERNATIONAL APPLICATION PUBLISHED UNDER THE PATENT COOPERATION TREATY (PCT)

(19) World Intellectual Property Organization
International Bureau

(43) International Publication Date
18 April 2002 (18.04.2002)

PCT

(10) International Publication Number
WO 02/31996 A2

(51) International Patent Classification[7]: H04B 1/00

(21) International Application Number: PCT/US01/31694

(22) International Filing Date: 9 October 2001 (09.10.2001)

(25) Filing Language: English

(26) Publication Language: English

(30) Priority Data:
09/686,266 10 October 2000 (10.10.2000) US

(71) Applicant: **QUALCOMM INCORPORATED** [US/US]; 5775 Morehouse Drive, San Diego, CA 92121-1714 (US).

(72) Inventors: **WALKER, Brett, C.**; 11850-2 Cypress Canyon Road, San Diego, CA 92131 (US). **ZEISEL, Eric**; 1047 1/2 Chalcedonay Street, San Diego, CA 92109 (US).

(74) Agents: **WADSWORTH, Philip, R.** et al.; Qualcomm Incorporated, 5775 Morehouse Drive, San Diego, CA 92121-1714 (US).

(81) Designated States *(national)*: AE, AG, AL, AM, AT, AU, AZ, BA, BB, BG, BR, BY, BZ, CA, CH, CN, CO, CR, CU, CZ, DE, DK, DM, DZ, EC, EE, ES, FI, GB, GD, GE, GH, GM, HR, HU, ID, IL, IN, IS, JP, KE, KG, KP, KR, KZ, LC, LK, LR, LS, LT, LU, LV, MA, MD, MG, MK, MN, MW, MX, MZ, NO, NZ, PH, PL, PT, RO, RU, SD, SE, SG, SI, SK, SL, TJ, TM, TR, TT, TZ, UA, UG, UZ, VN, YU, ZA, ZW.

(84) Designated States *(regional)*: ARIPO patent (GH, GM, KE, LS, MW, MZ, SD, SL, SZ, TZ, UG, ZW), Eurasian patent (AM, AZ, BY, KG, KZ, MD, RU, TJ, TM), European patent (AT, BE, CH, CY, DE, DK, ES, FI, FR, GB, GR, IE, IT, LU, MC, NL, PT, SE, TR), OAPI patent (BF, BJ, CF, CG, CI, CM, GA, GN, GQ, GW, ML, MR, NE, SN, TD, TG).

Published:
— *without international search report and to be republished upon receipt of that report*

For two-letter codes and other abbreviations, refer to the "Guidance Notes on Codes and Abbreviations" appearing at the beginning of each regular issue of the PCT Gazette.

(54) Title: ADJUSTMENT OF BIAS CURRENT IN A FIRST INTEGRATED CIRCUIT BASED ON A SIGNAL GAIN OF A SECOND INTEGRATED CIRCUIT

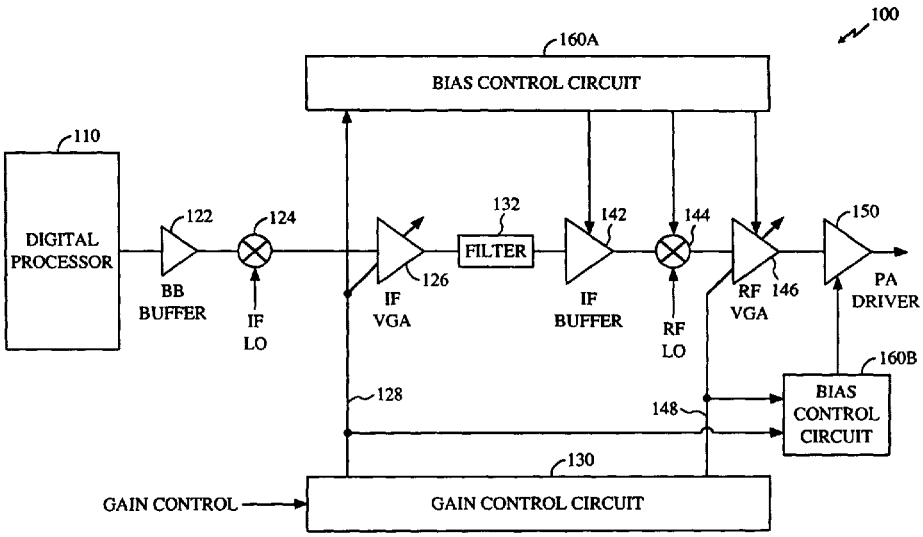

(57) Abstract: A technique of adjusting the bias current of an active circuit in a transmit signal path based on the signal gain(s) of variable gain element(s) located prior to the active circuit. The technique is particularly advantageous when the gain element(s) are located on one IC (e.g., that implements an IF portion) and the active circuit is implemented on another IC (e.g., that implements a RF portion). The bias current of the active circuit is set based, in part, on the input power level, which may be inferred from the gain control signal(s) used to control the preceding variable gain elements. Initially, at least one gain control signal. A bias current for the active circuit is then determined based, in part, on the estimated input signal level. The active circuit is biased with the determined bias current. The biased current can be limited to a range defined by an upper bias current and a lower bias current.

WO 02/31996 A2