Fig.1

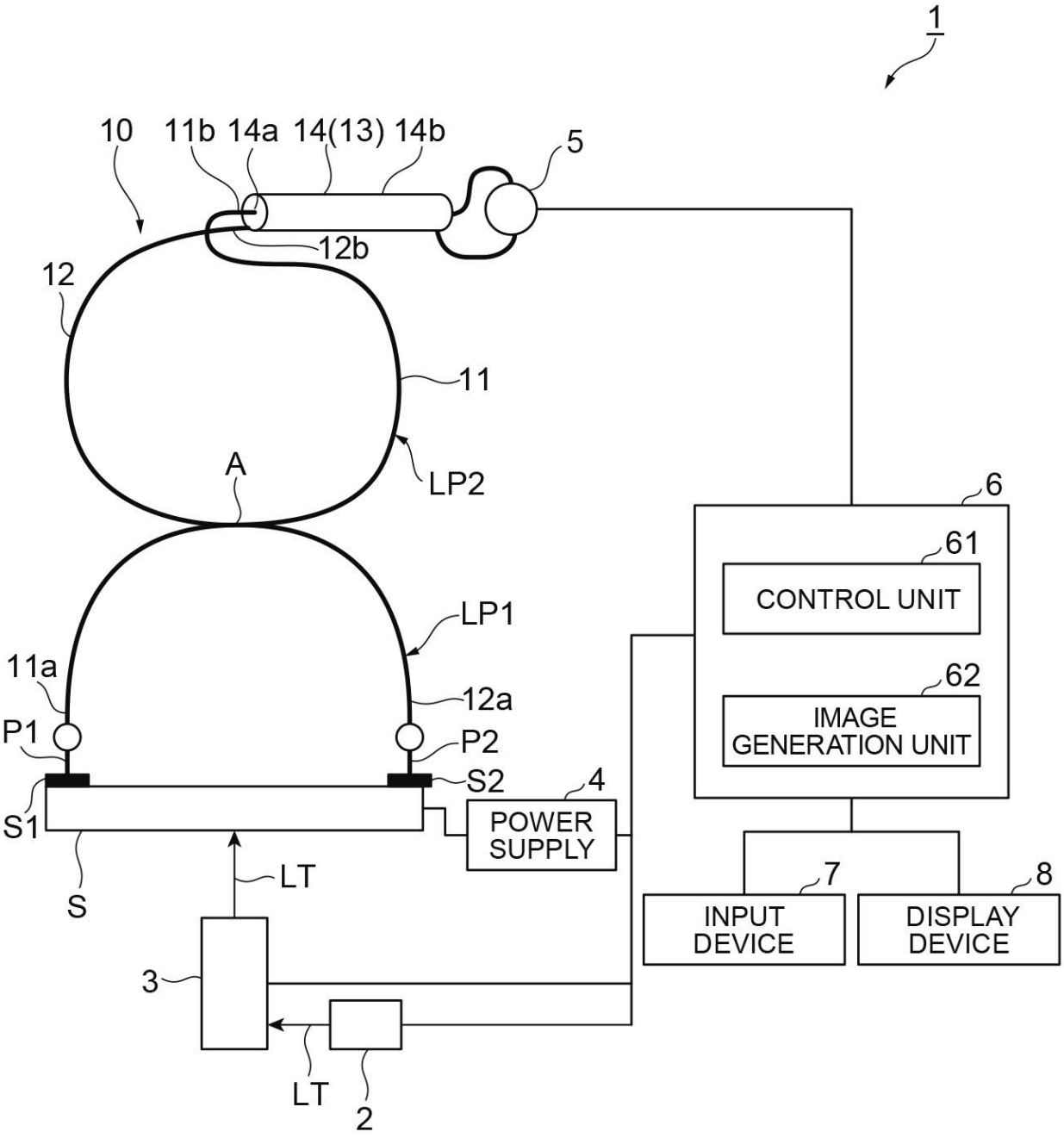
1
10
11b
14a
14(13)
14b
5
12b
12
11
A
LP2
6
61
CONTROL UNIT
62
IMAGE GENERATION UNIT
LP1
11a
12a
P1
P2
S2
4
POWER SUPPLY
S1
S
LT
7
8
INPUT DEVICE
DISPLAY DEVICE
3
LT
2

Fig.2

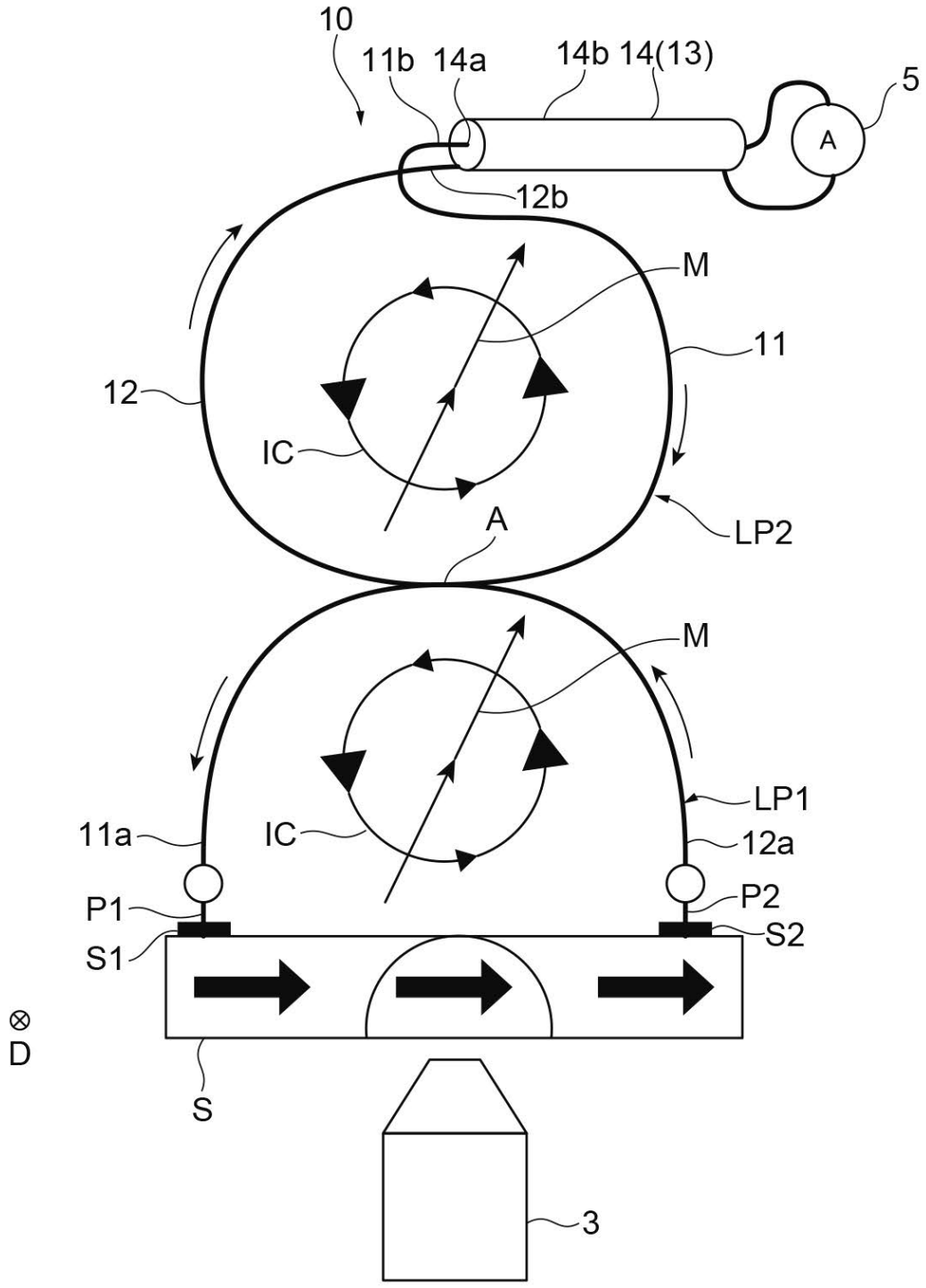
10
11b
14a
14b
14(13)
5
A
12b
M
11
12
IC
LP2
A
M
LP1
11a
IC
12a
P1
P2
S1
S2
⊗
D
S
3

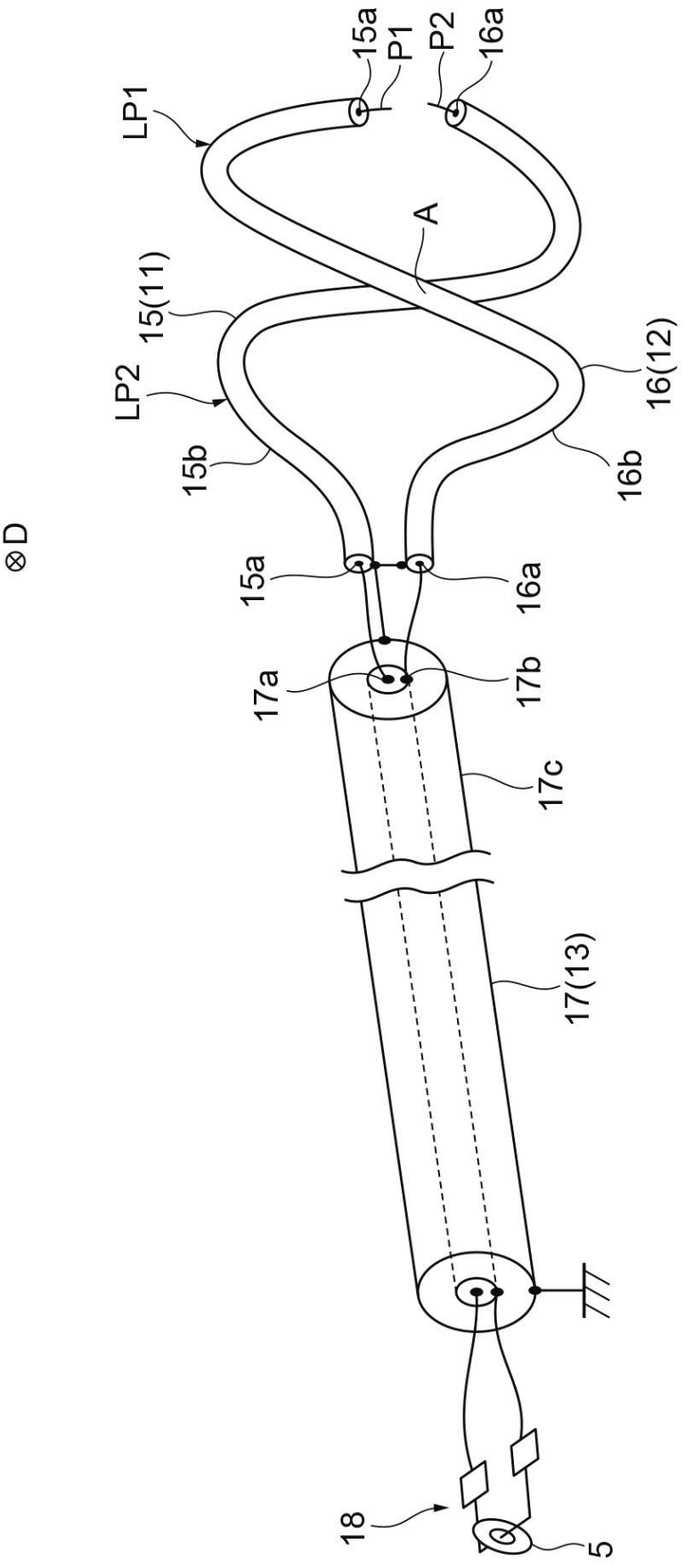
⊗D
LP1
15a
P1
P2
16a
A
15(11)
LP2
16(12)
15b
16b
15a
16a
17a
17b
17c
17(13)
18
5

Fig.3

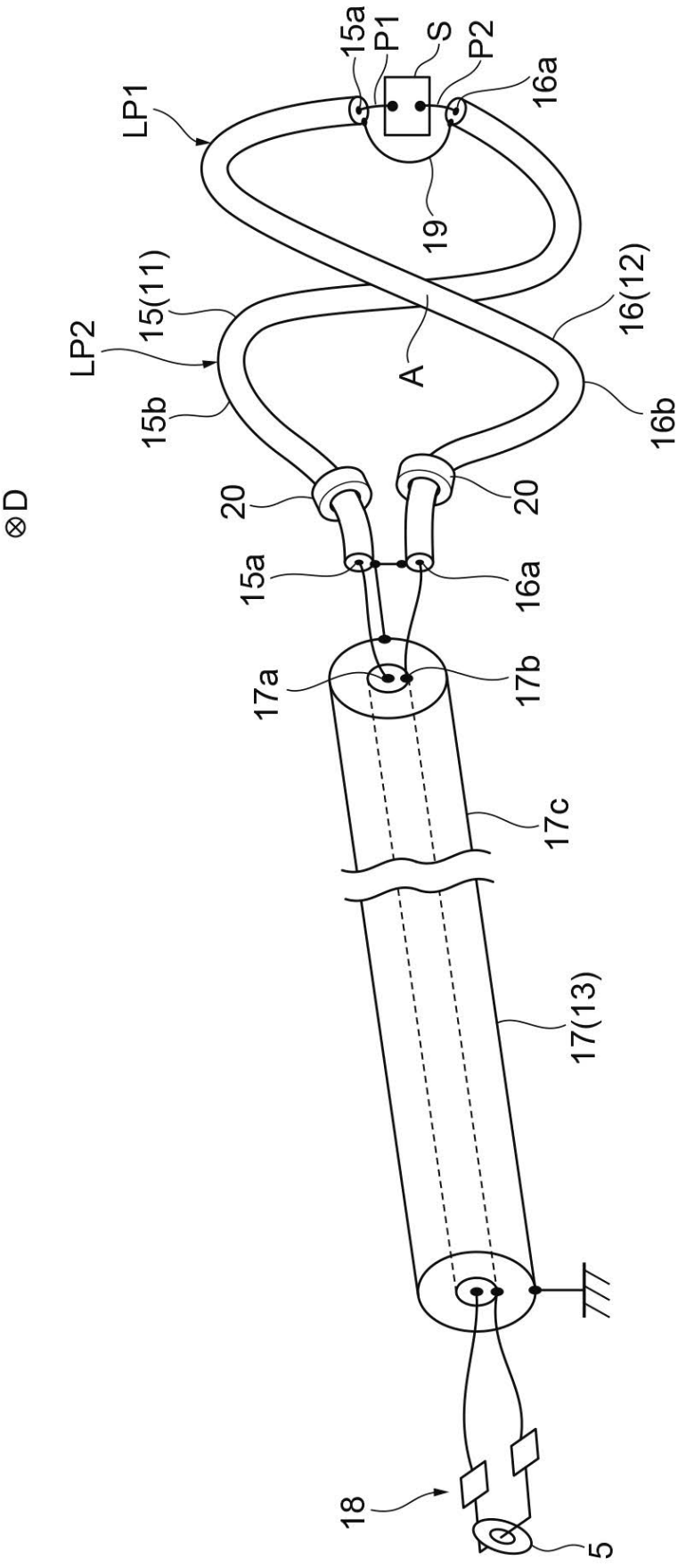
⊗D
LP1
LP2
15a
P1
S
P2
16a
19
15(11)
16(12)
A
15b
16b
20
20
15a
16a
17a
17b
17c
17(13)
18
5

Fig.4

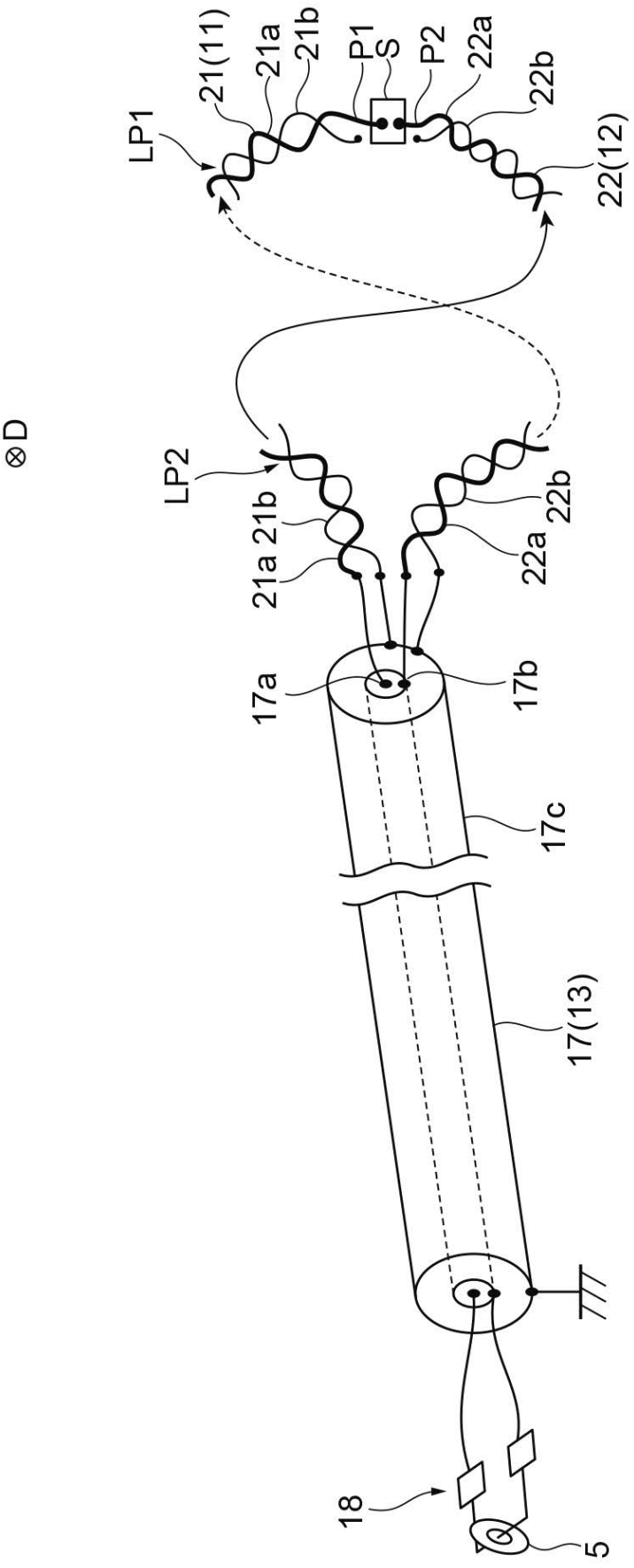
⊗D
LP1
21(11)
21a
21b
P1
S
P2
22a
22b
22(12)
LP2
21b
21a
22b
22a
17a
17b
17c
17(13)
18
5

Fig.5

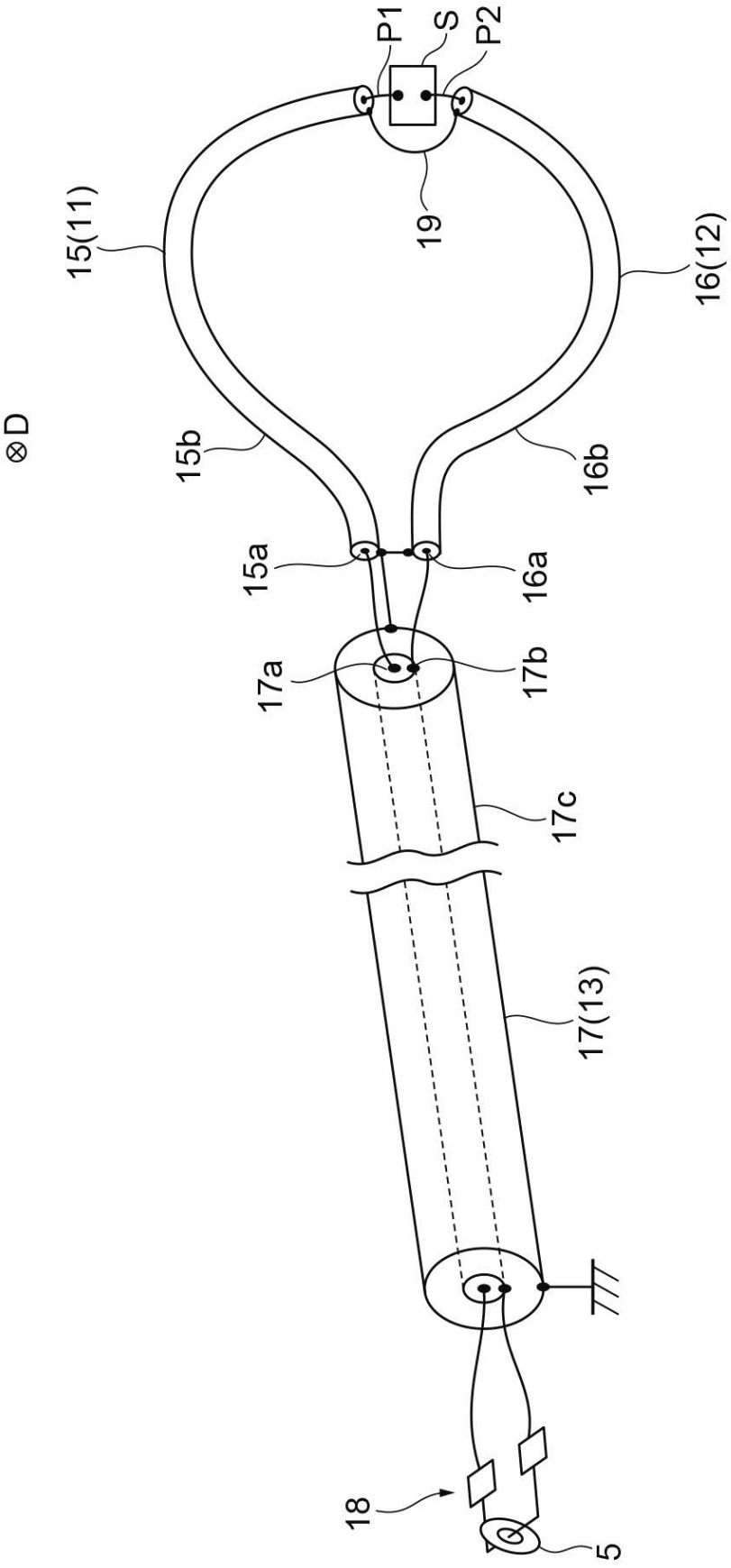

Fig.6

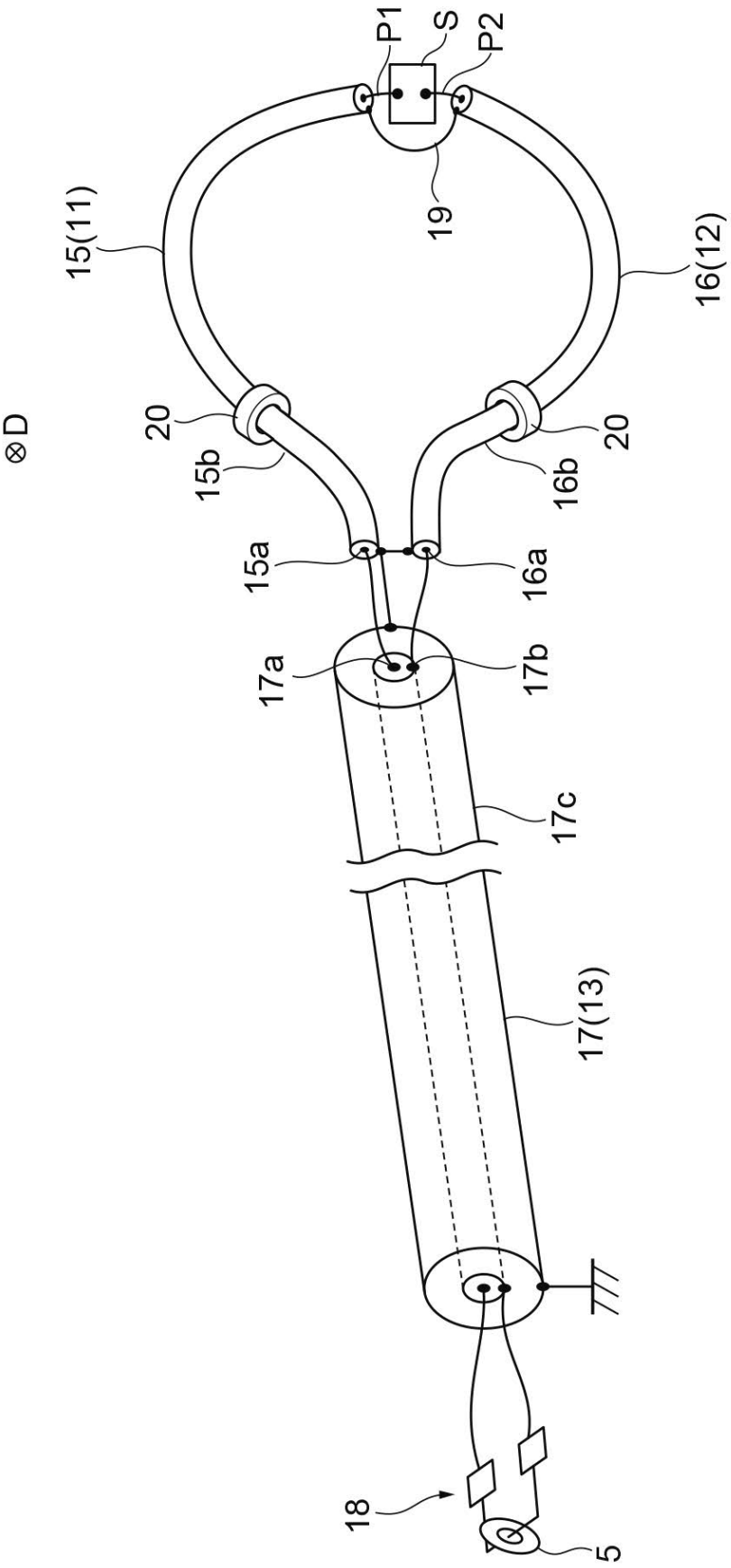

Fig.7

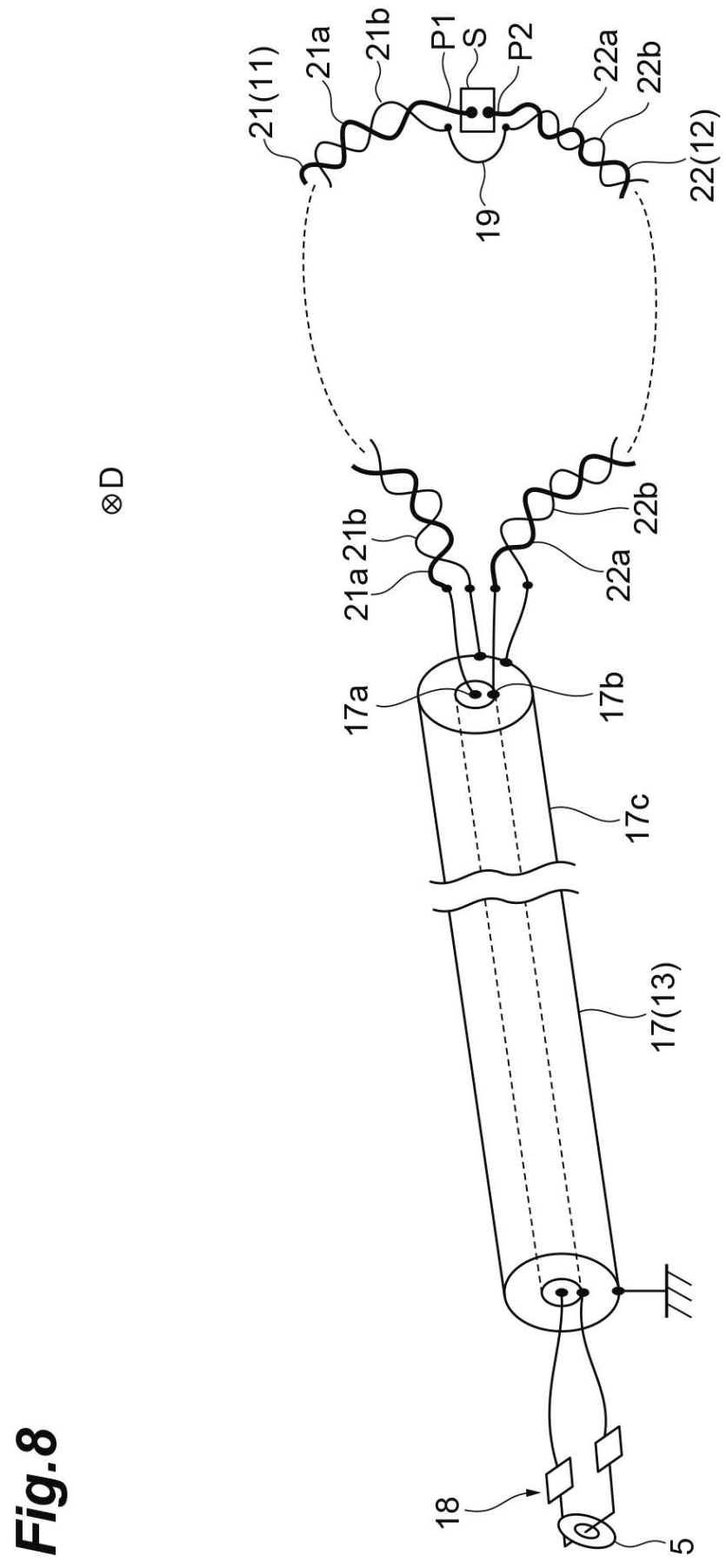
⊗D
21(11)
21a
21b
P1
S
P2
22a
22b
22(12)
19
21a
21b
22a
22b
17a
17b
17c
17(13)
18
5

Fig.8

Fig.9

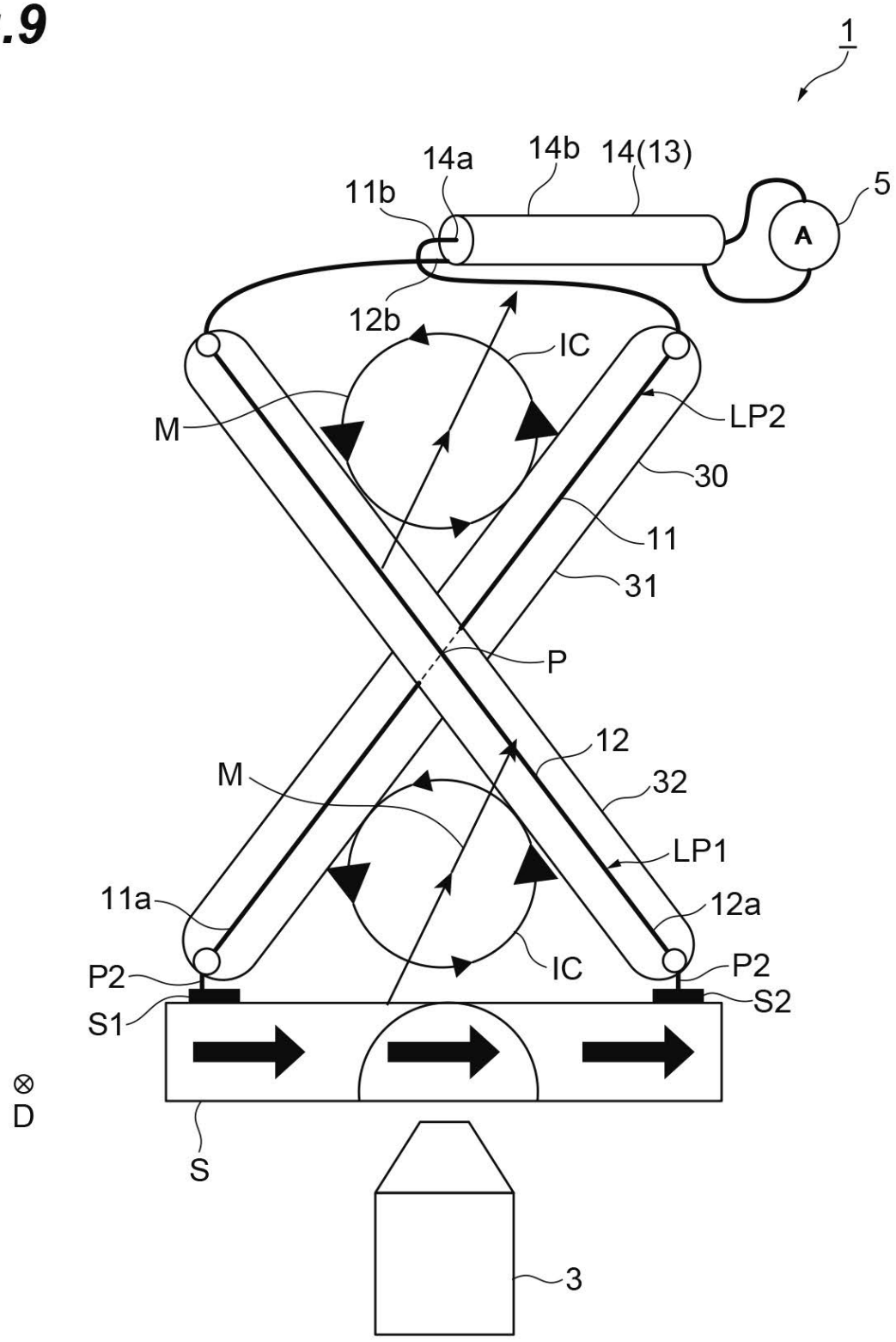
1
14a
14b
14(13)
11b
5
A
12b
IC
M
LP2
30
11
31
P
12
M
32
LP1
11a
12a
IC
P2
P2
S1
S2
⊗
D
S
3

Fig.10

