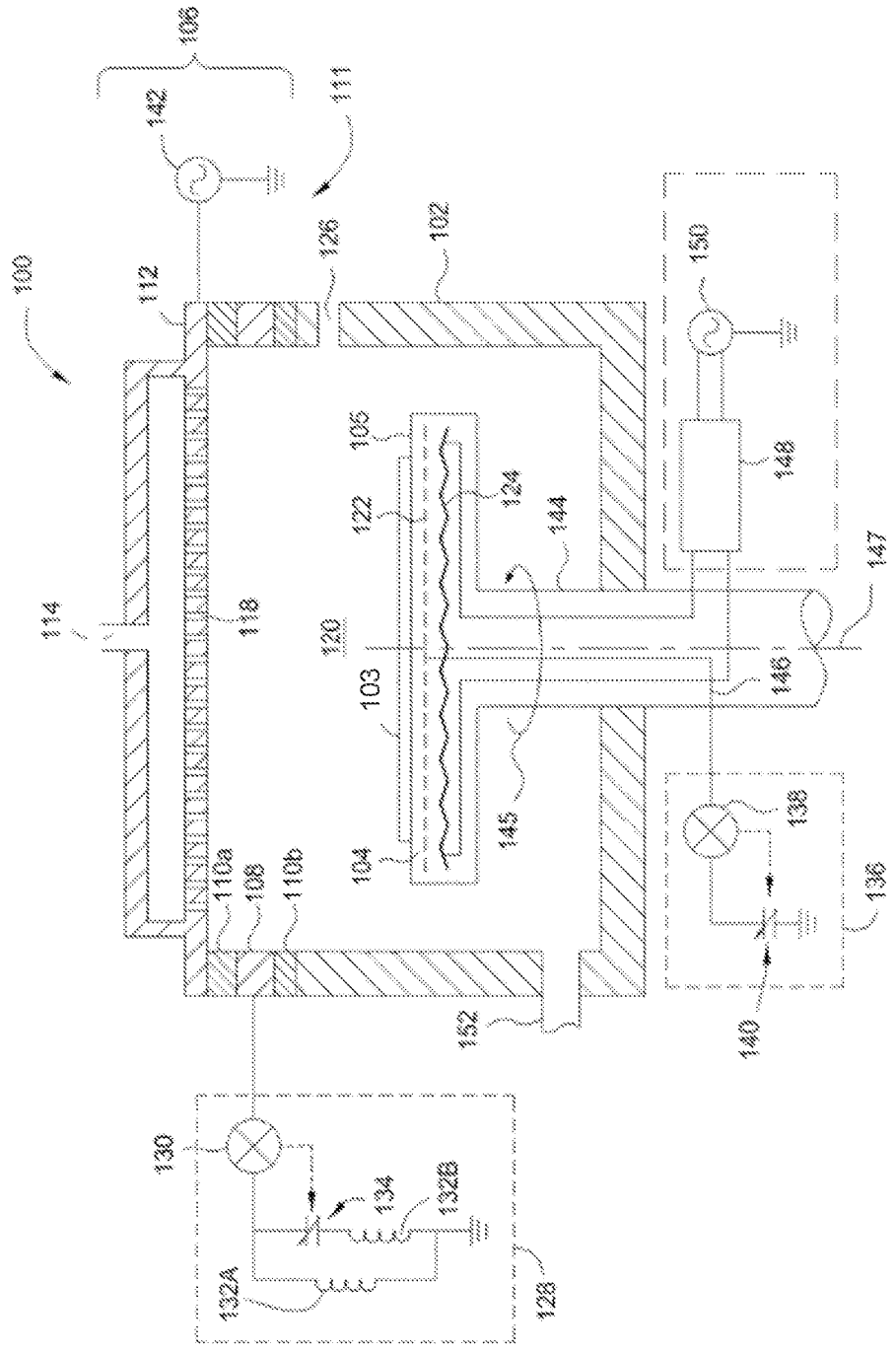
106
142
111
100
112
126
102
150
105
124
122
144
148
147
114
118
120
103
146
145
138
104
110a
108
110b
136
152
140
130
134
132B
132A
128

FIG. 1

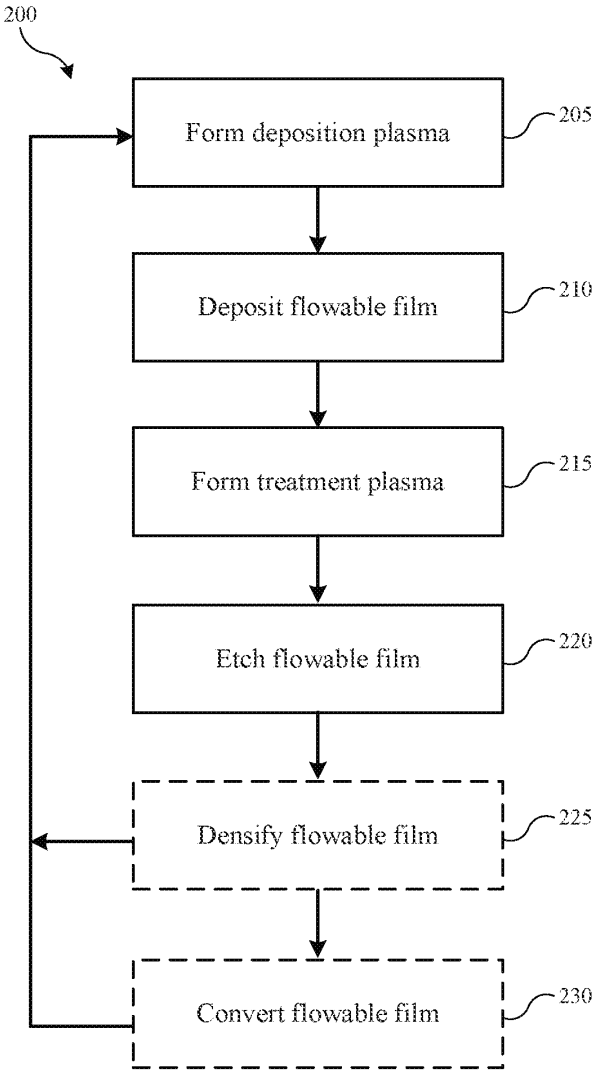
200
Form deposition plasma
205
Deposit flowable film
210
Form treatment plasma
215
Etch flowable film
220
Densify flowable film
225
Convert flowable film
230

FIG. 2

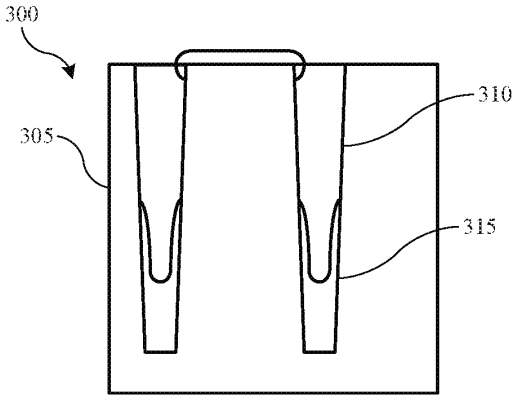

FIG. 3A

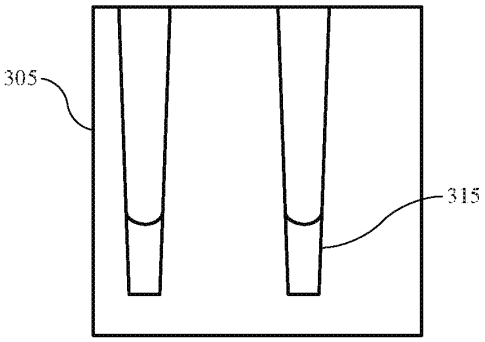

FIG. 3B

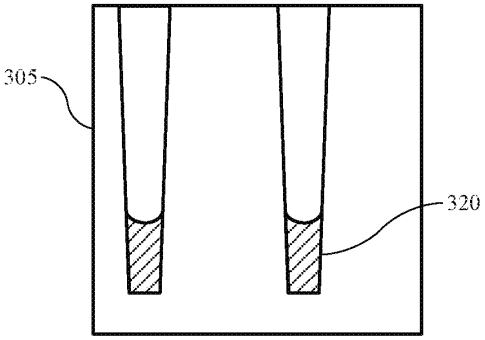

FIG. 3C