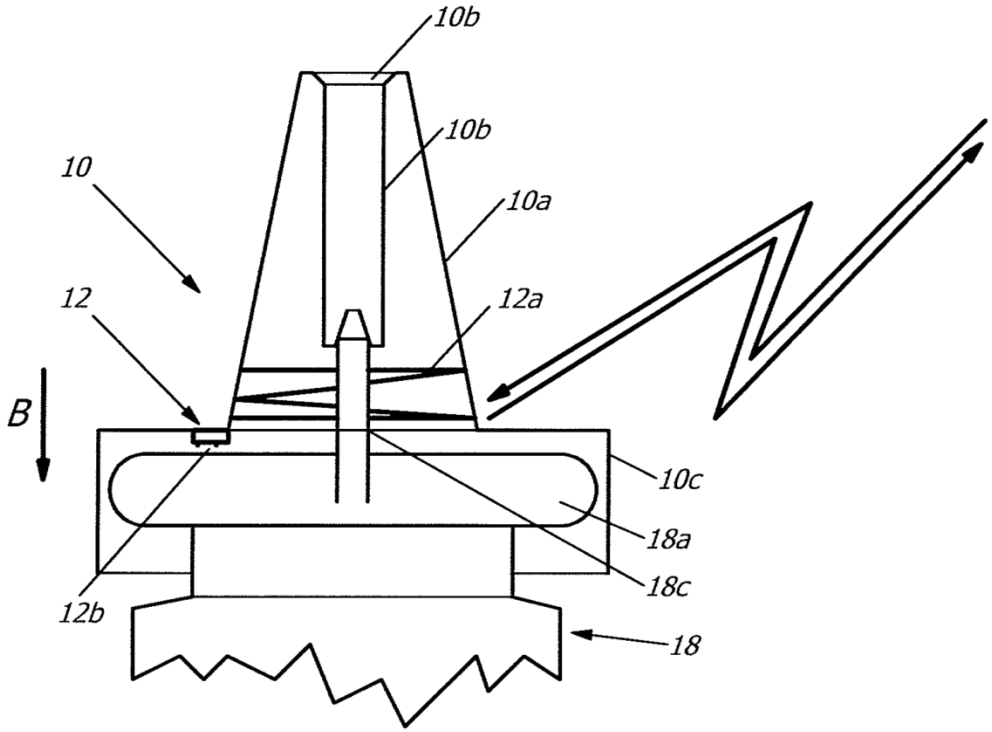
10b
10b
10
10a
12
12a
B
10c
18a
18c
12b
18

Fig. 1

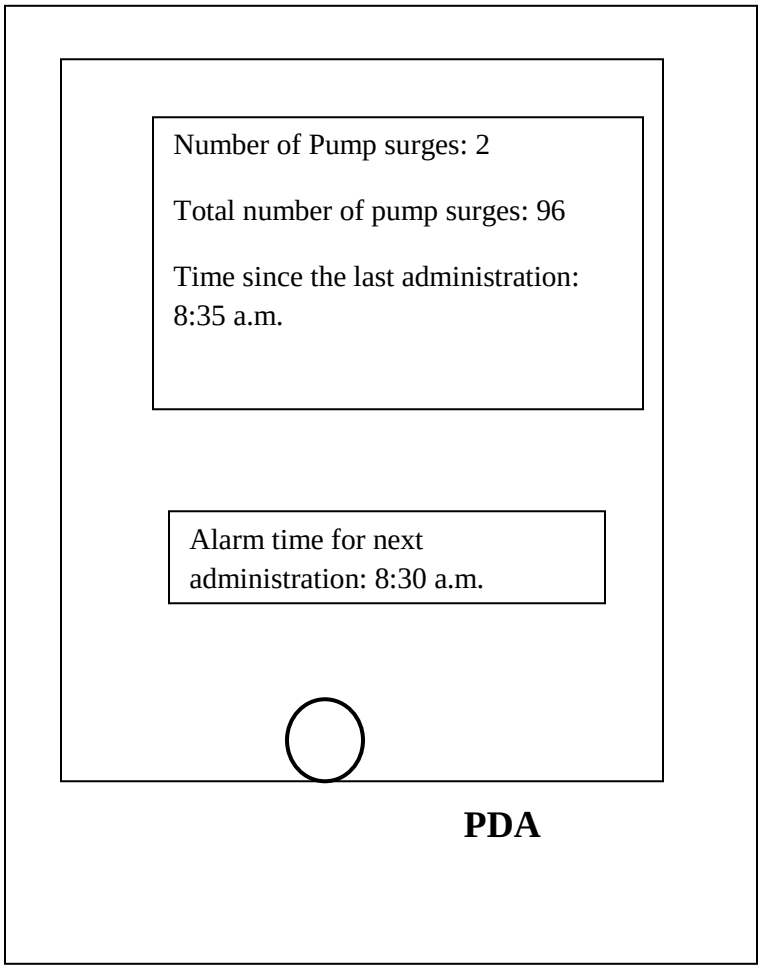
Number of Pump surges: 2
Total number of pump surges: 96
Time since the last administration: 8:35 a.m.
Alarm time for next administration: 8:30 a.m.
PDA

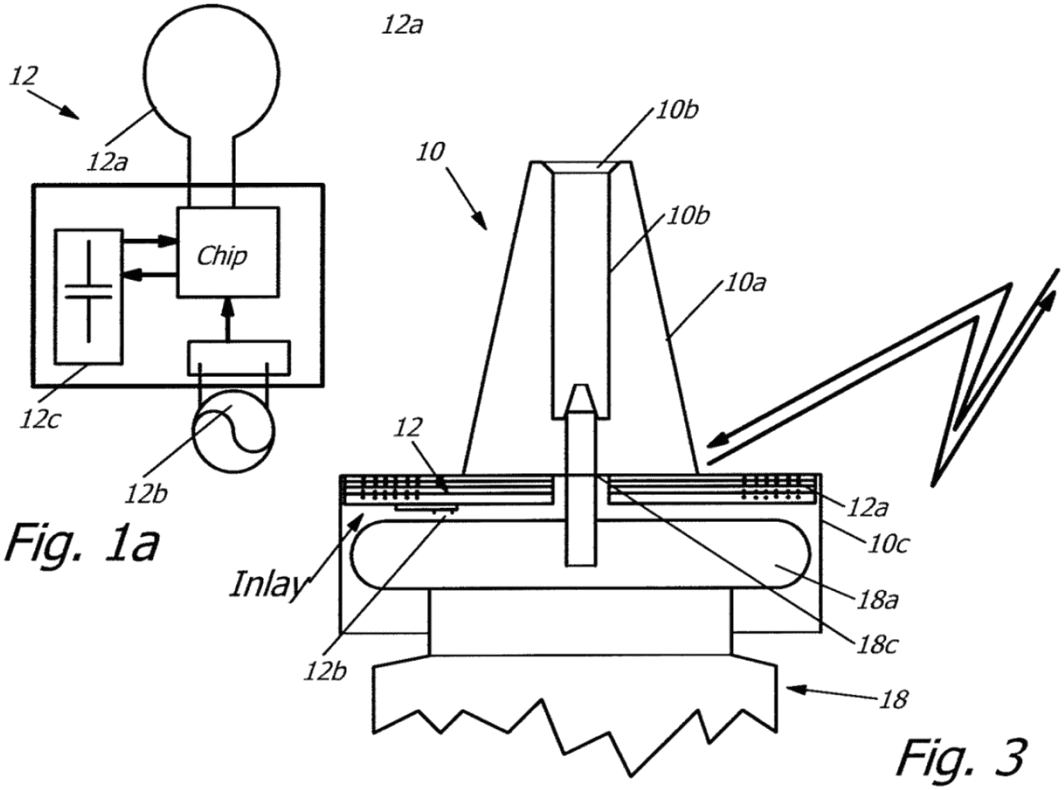


Fig. 1a

Fig. 3

Number of pump surges: 2

Total number of pump surges: 96

Time since the last administration: 8:35 a.m.

Alarm time for next administration: 8:30 a.m.

**PDA**

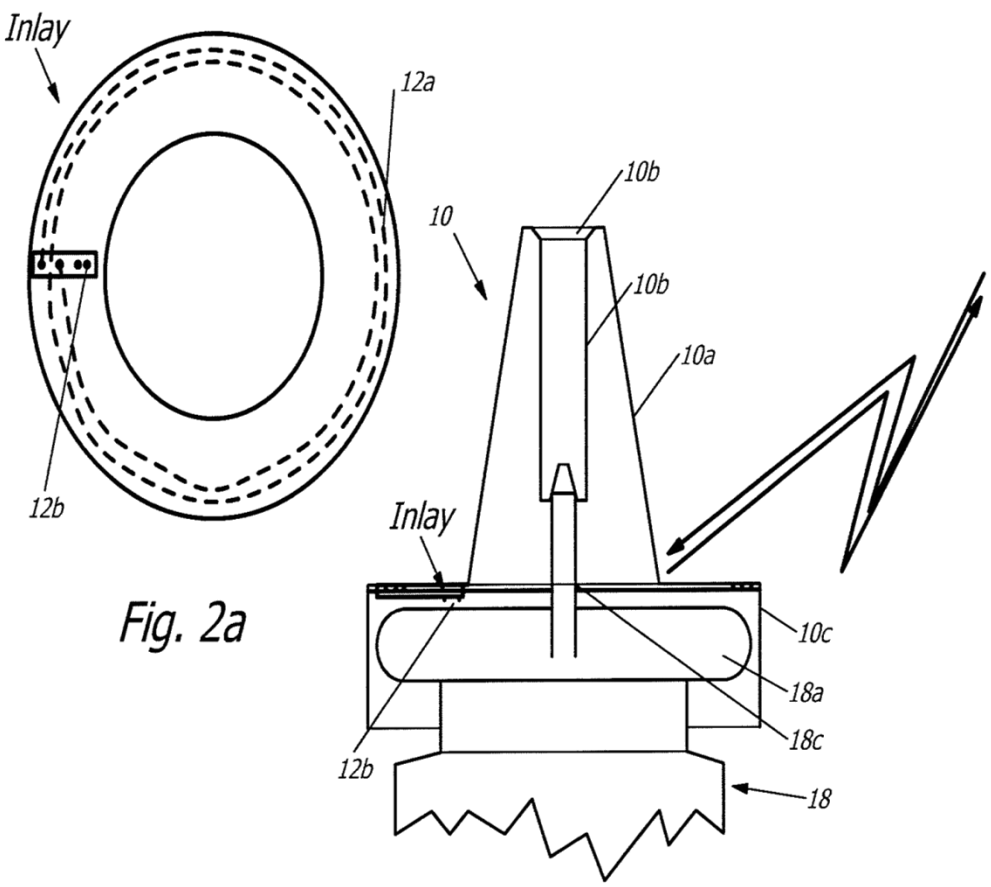
Inlay
12a
12b
10
10b
10b
10a
Inlay
10c
18a
18c
12b
18

Fig. 2a

Fig. 2

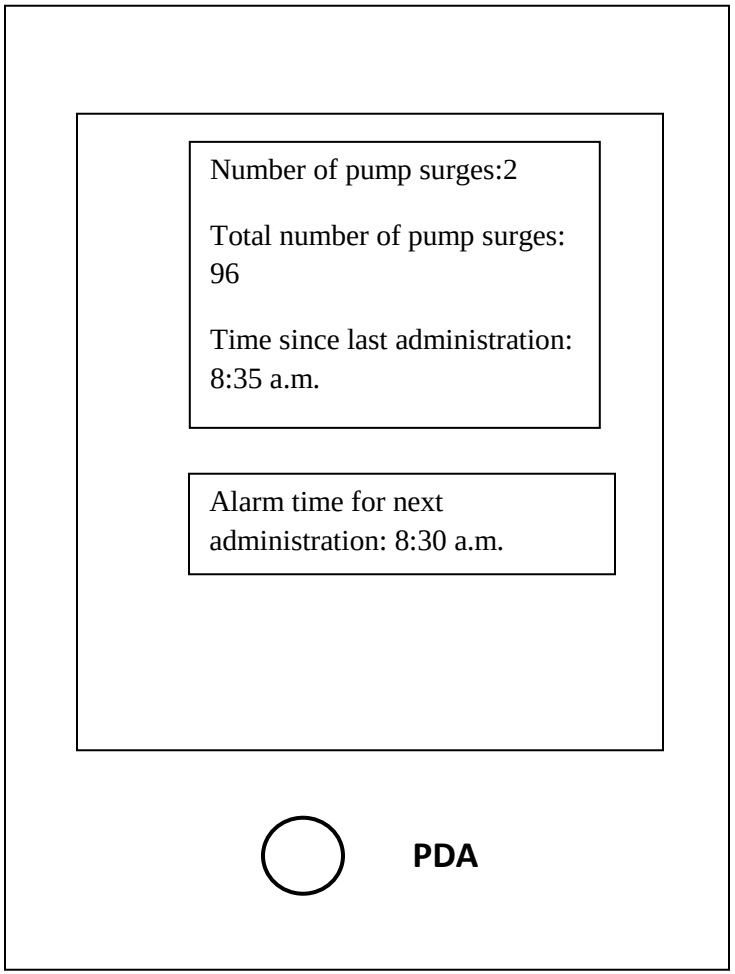
Number of pump surges:2
Total number of pump surges: 96
Time since last administration: 8:35 a.m.
Alarm time for next administration: 8:30 a.m.
PDA

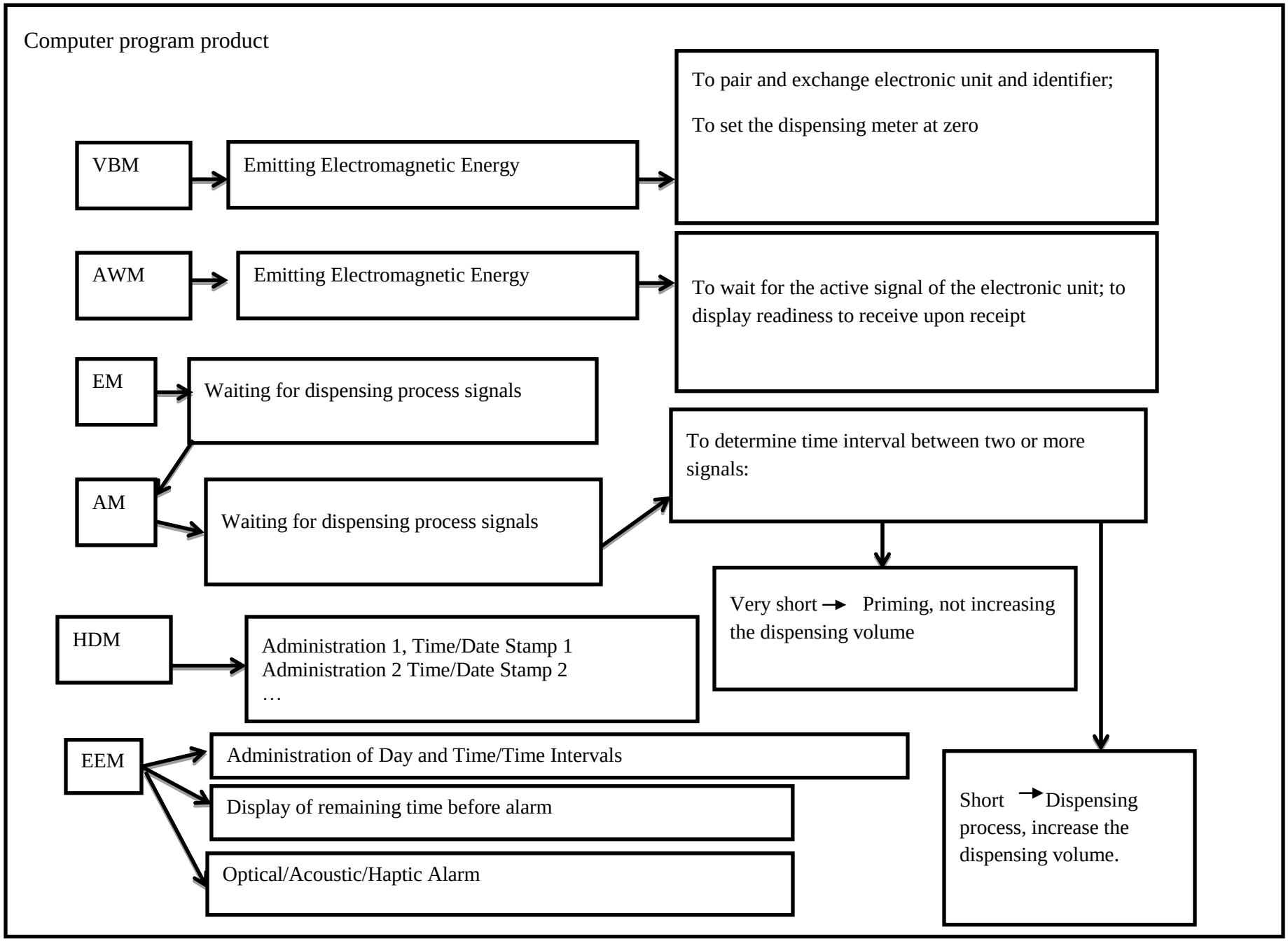
Computer program product
VBM
Emitting Electromagnetic Energy
To pair and exchange electronic unit and identifier;
To set the dispensing meter at zero
AWM
Emitting Electromagnetic Energy
To wait for the active signal of the electronic unit; to display readiness to receive upon receipt
EM
Waiting for dispensing process signals
AM
Waiting for dispensing process signals
To determine time interval between two or more signals:
Very short → Priming, not increasing the dispensing volume
HDM
Administration 1, Time/Date Stamp 1
Administration 2 Time/Date Stamp 2
…
EEM
Administration of Day and Time/Time Intervals
Display of remaining time before alarm
Optical/Acoustic/Haptic Alarm
Short → Dispensing process, increase the dispensing volume.

Fig. 4