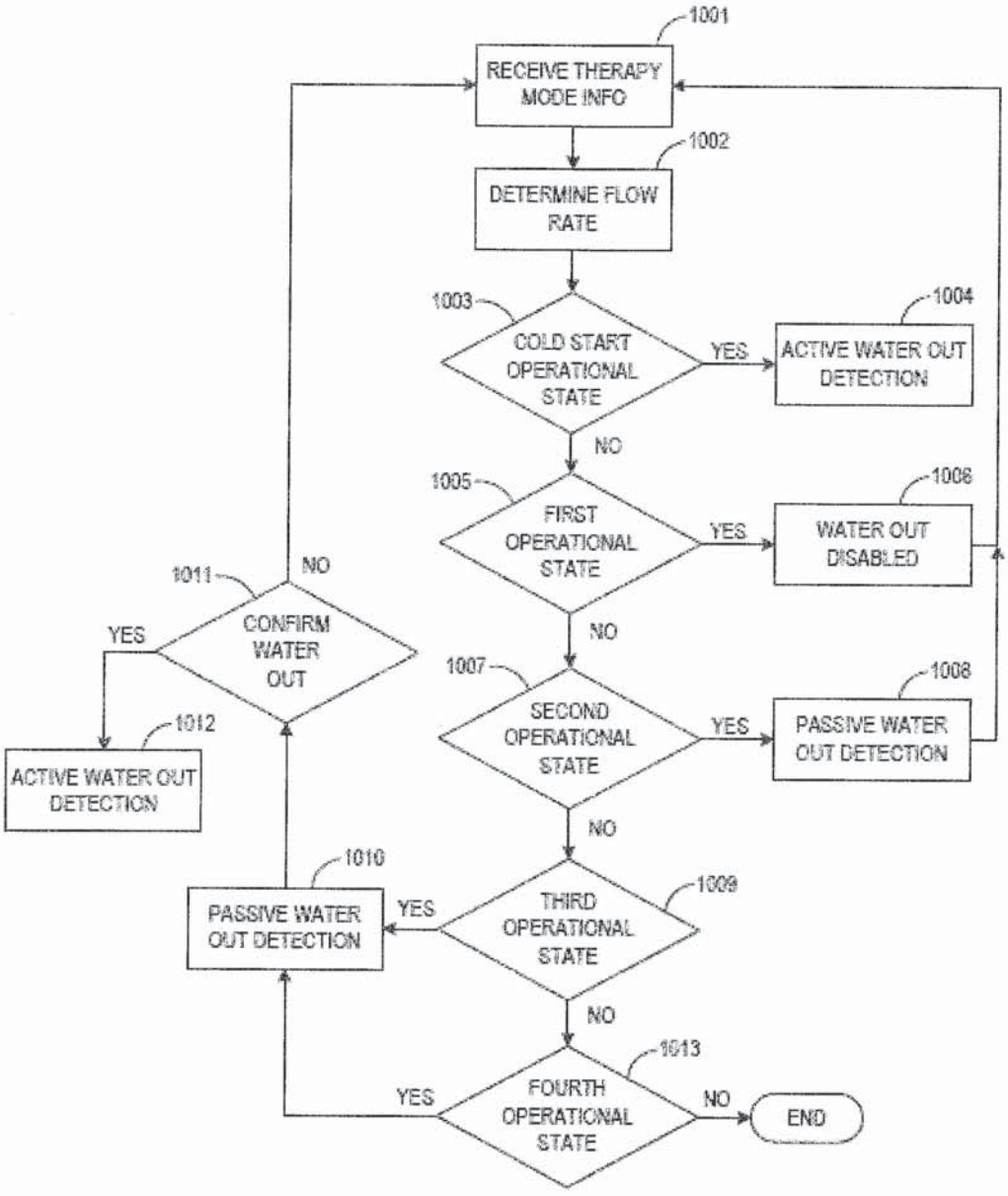
1001
RECEIVE THERAPY MODE INFO
1002
DETERMINE FLOW RATE
1003
COLD START OPERATIONAL STATE
YES
1004
ACTIVE WATER OUT DETECTION
NO
1005
FIRST OPERATIONAL STATE
YES
1006
WATER OUT DISABLED
NO
1007
SECOND OPERATIONAL STATE
YES
1008
PASSIVE WATER OUT DETECTION
NO
1009
THIRD OPERATIONAL STATE
YES
1010
PASSIVE WATER OUT DETECTION
NO
1011
CONFIRM WATER OUT
YES
1012
ACTIVE WATER OUT DETECTION
NO
1013
FOURTH OPERATIONAL STATE
YES
NO
END

FIG. 1a

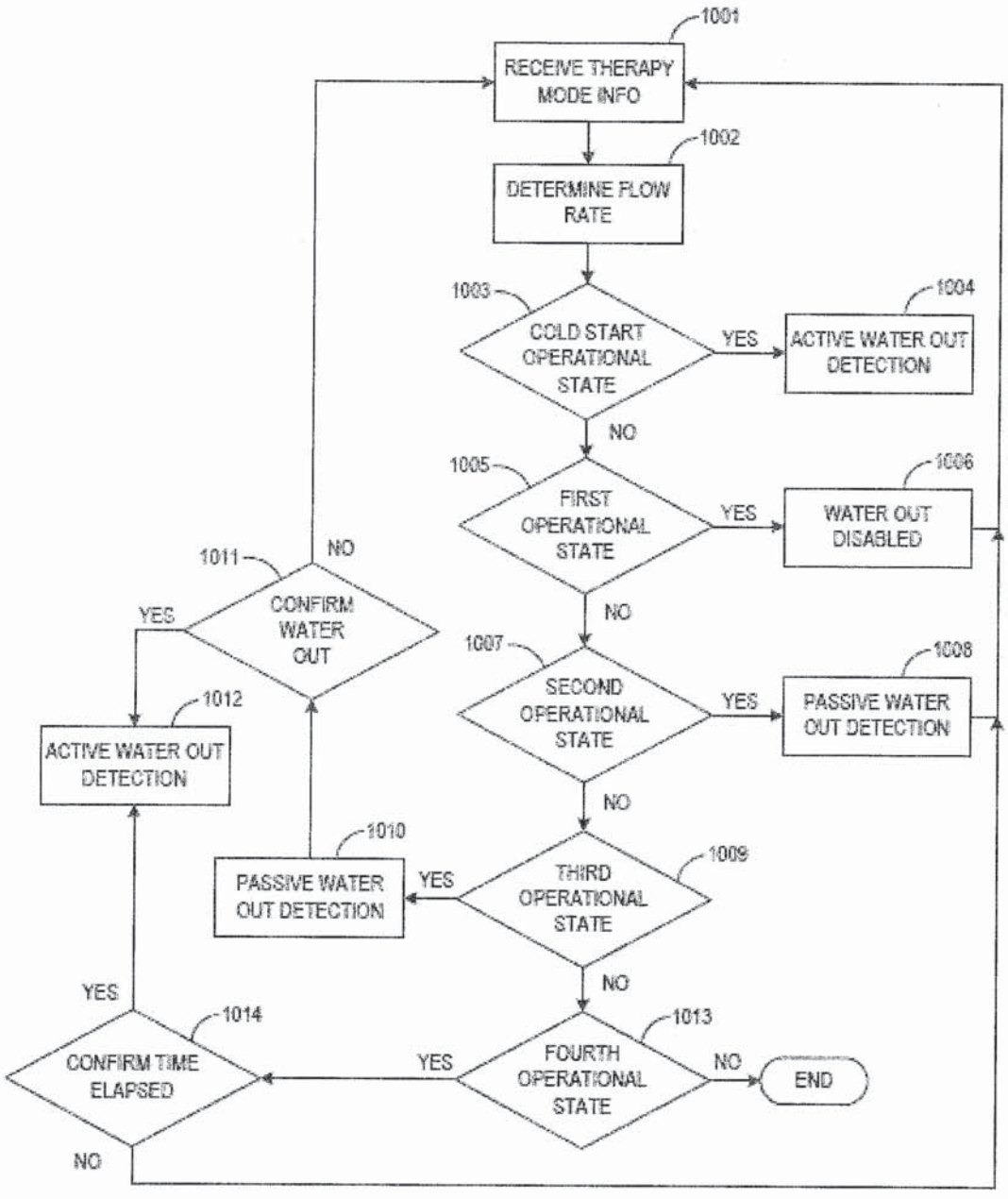
1001
RECEIVE THERAPY MODE INFO
1002
DETERMINE FLOW RATE
1003
COLD START OPERATIONAL STATE
YES
1004
ACTIVE WATER OUT DETECTION
NO
1005
FIRST OPERATIONAL STATE
YES
1006
WATER OUT DISABLED
NO
1007
SECOND OPERATIONAL STATE
YES
1008
PASSIVE WATER OUT DETECTION
NO
1009
THIRD OPERATIONAL STATE
YES
1010
PASSIVE WATER OUT DETECTION
NO
1011
CONFIRM WATER OUT
YES
NO
1012
ACTIVE WATER OUT DETECTION
YES
1013
FOURTH OPERATIONAL STATE
YES
1014
CONFIRM TIME ELAPSED
NO
NO
END

FIG. 1b

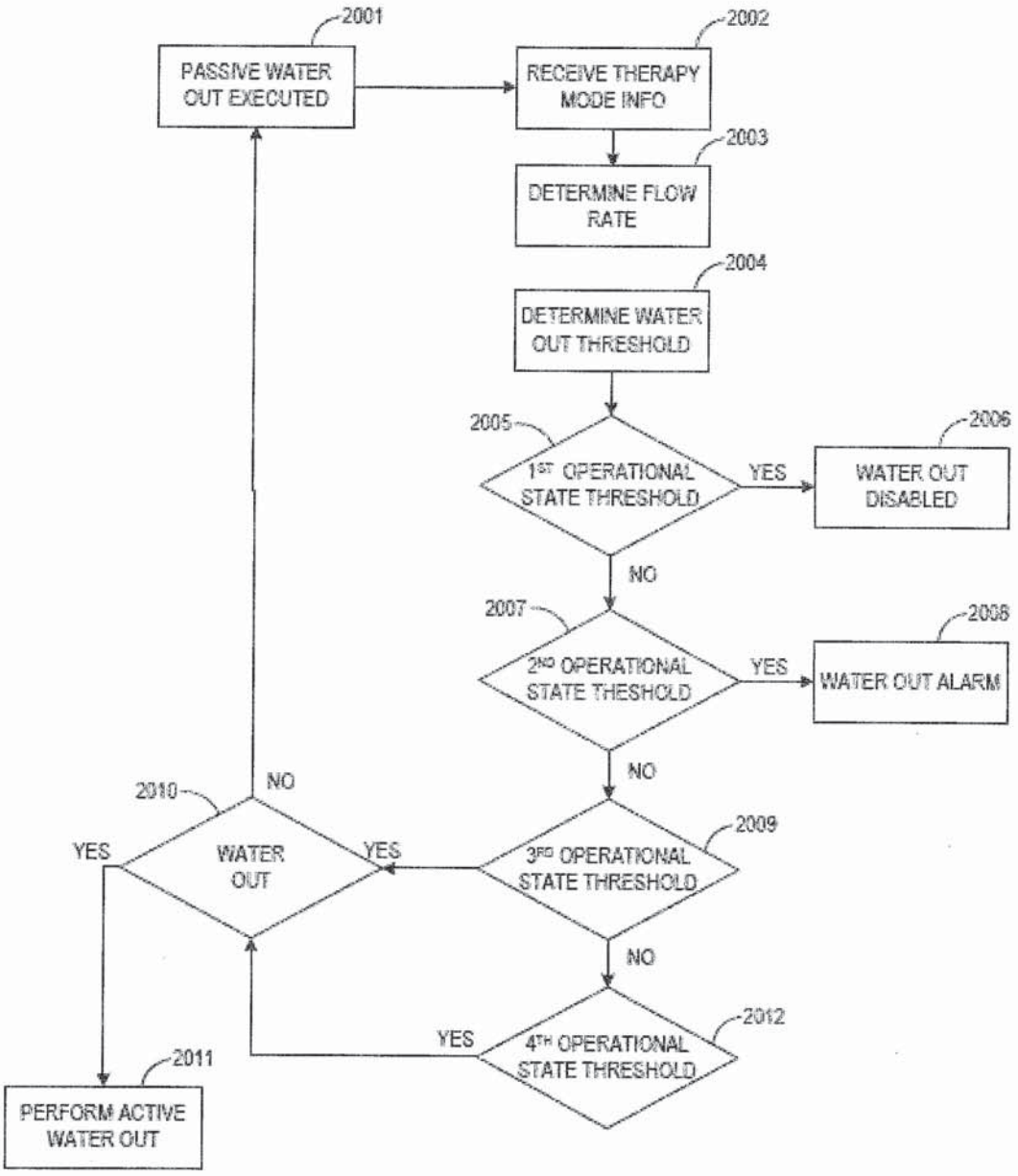
2001
PASSIVE WATER OUT EXECUTED
2002
RECEIVE THERAPY MODE INFO
2003
DETERMINE FLOW RATE
2004
DETERMINE WATER OUT THRESHOLD
2005
1ST OPERATIONAL STATE THRESHOLD
YES
2006
WATER OUT DISABLED
NO
2007
2ND OPERATIONAL STATE THESHOLD
YES
2008
WATER OUT ALARM
NO
2009
3RD OPERATIONAL STATE THRESHOLD
YES
2010
WATER OUT
YES
NO
NO
2012
4TH OPERATIONAL STATE THRESHOLD
YES
2011
PERFORM ACTIVE WATER OUT

FIG. 2

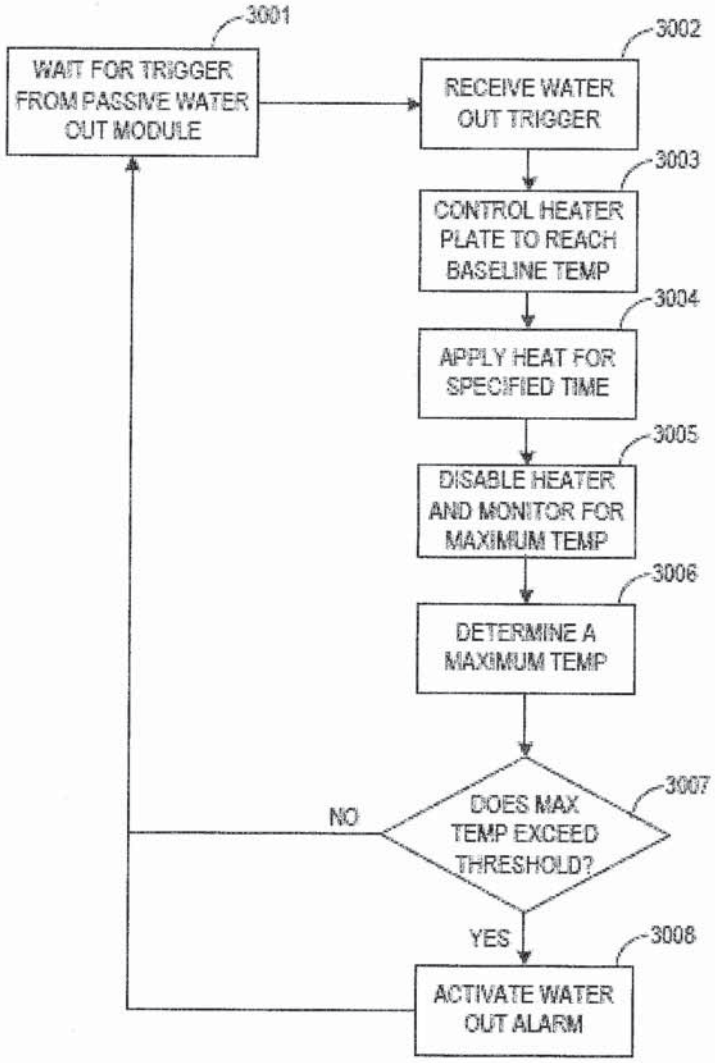
3001
WAIT FOR TRIGGER FROM PASSIVE WATER OUT MODULE
3002
RECEIVE WATER OUT TRIGGER
3003
CONTROL HEATER PLATE TO REACH BASELINE TEMP
3004
APPLY HEAT FOR SPECIFIED TIME
3005
DISABLE HEATER AND MONITOR FOR MAXIMUM TEMP
3006
DETERMINE A MAXIMUM TEMP
3007
DOES MAX TEMP EXCEED THRESHOLD?
NO
YES
3008
ACTIVATE WATER OUT ALARM

FIG. 3

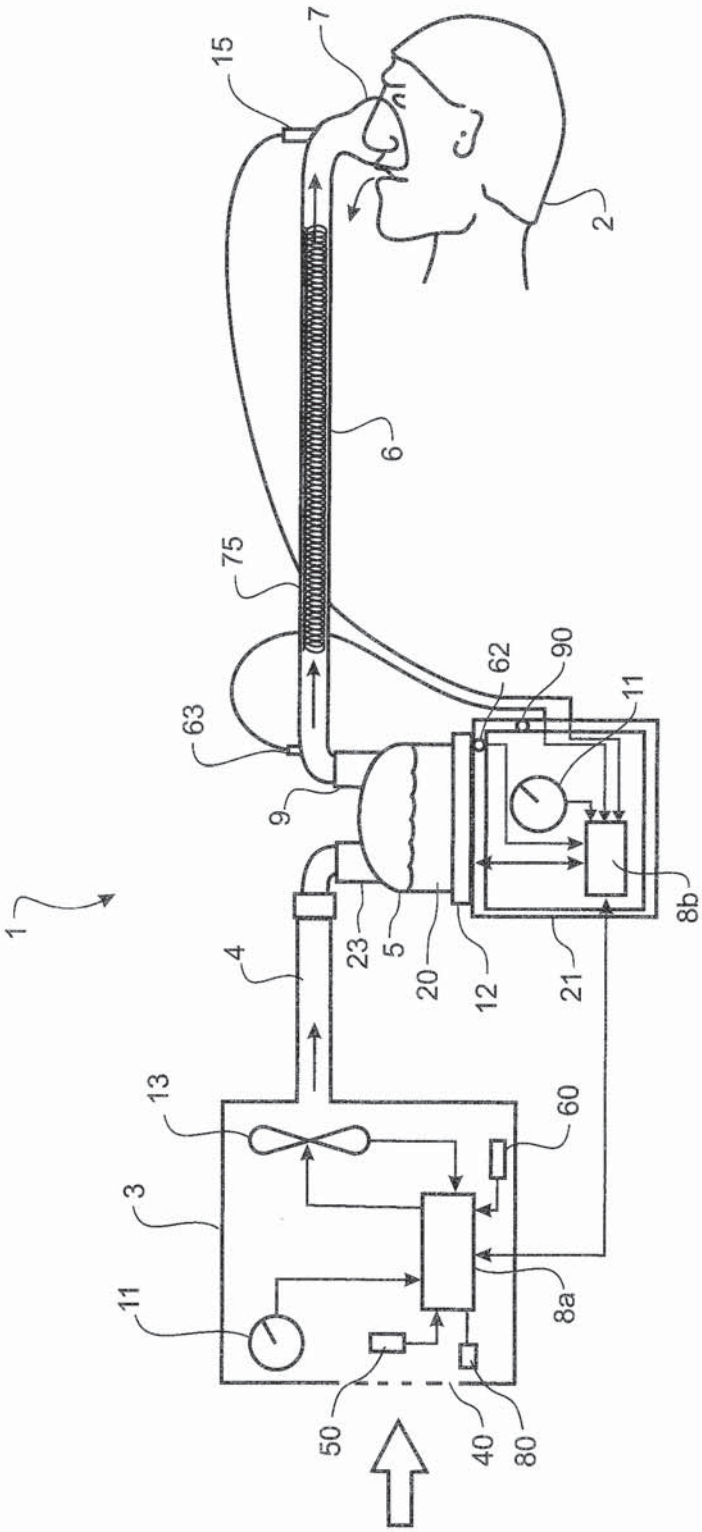

FIG. 4a

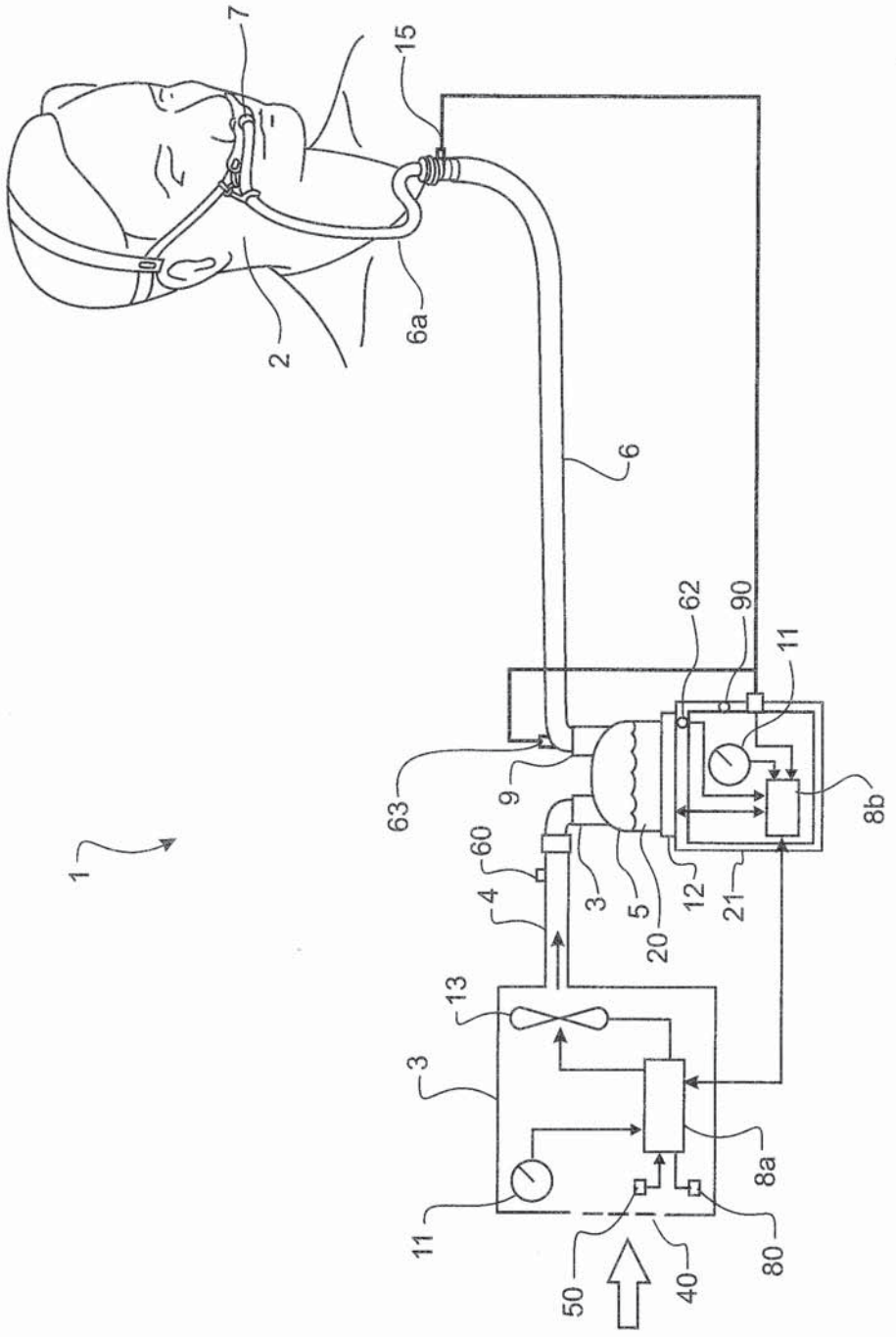

FIG. 4b

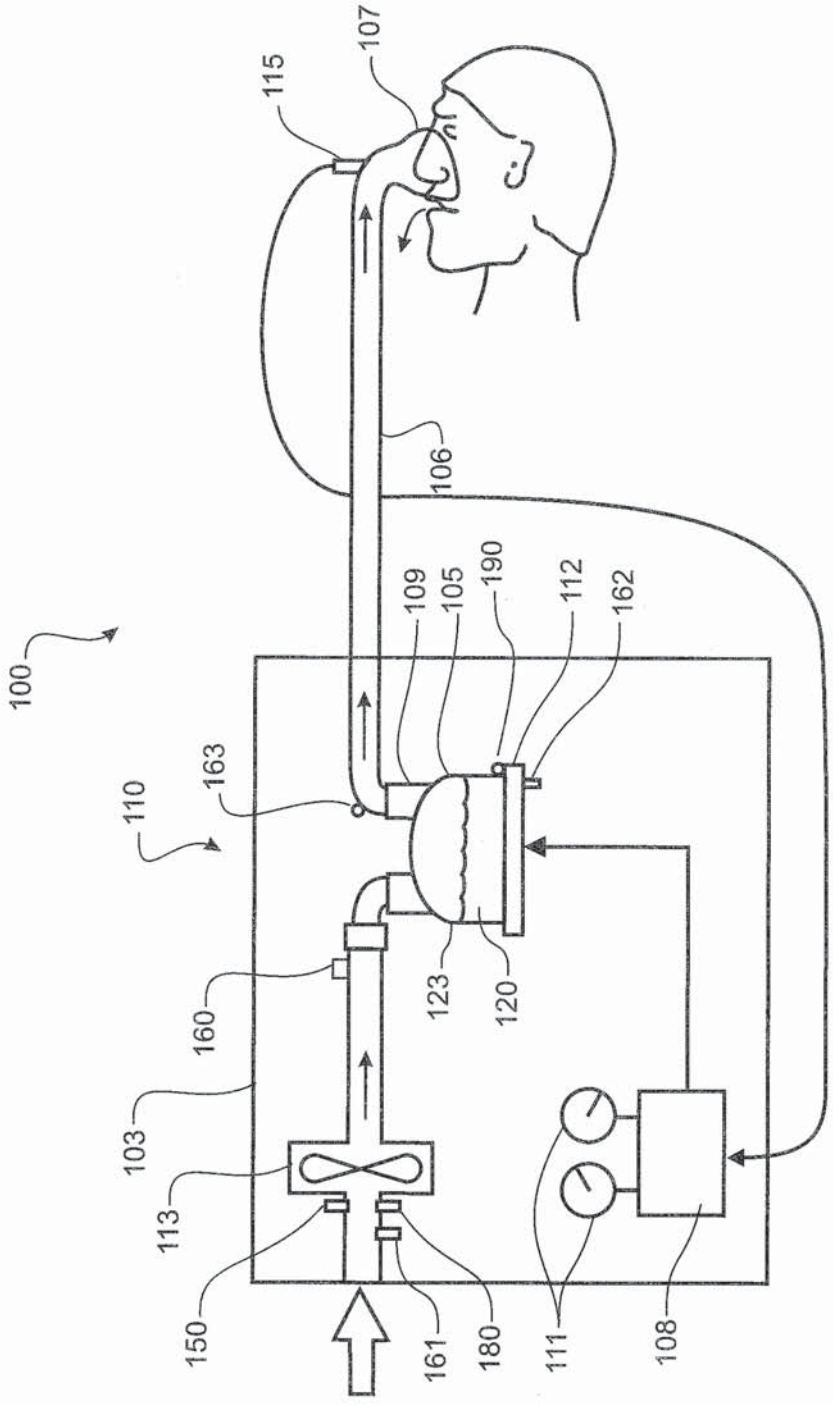
100
110
163
103
113
150
161
180
160
123
120
109
105
190
112
162
115
107
106
111
108

FIG. 5

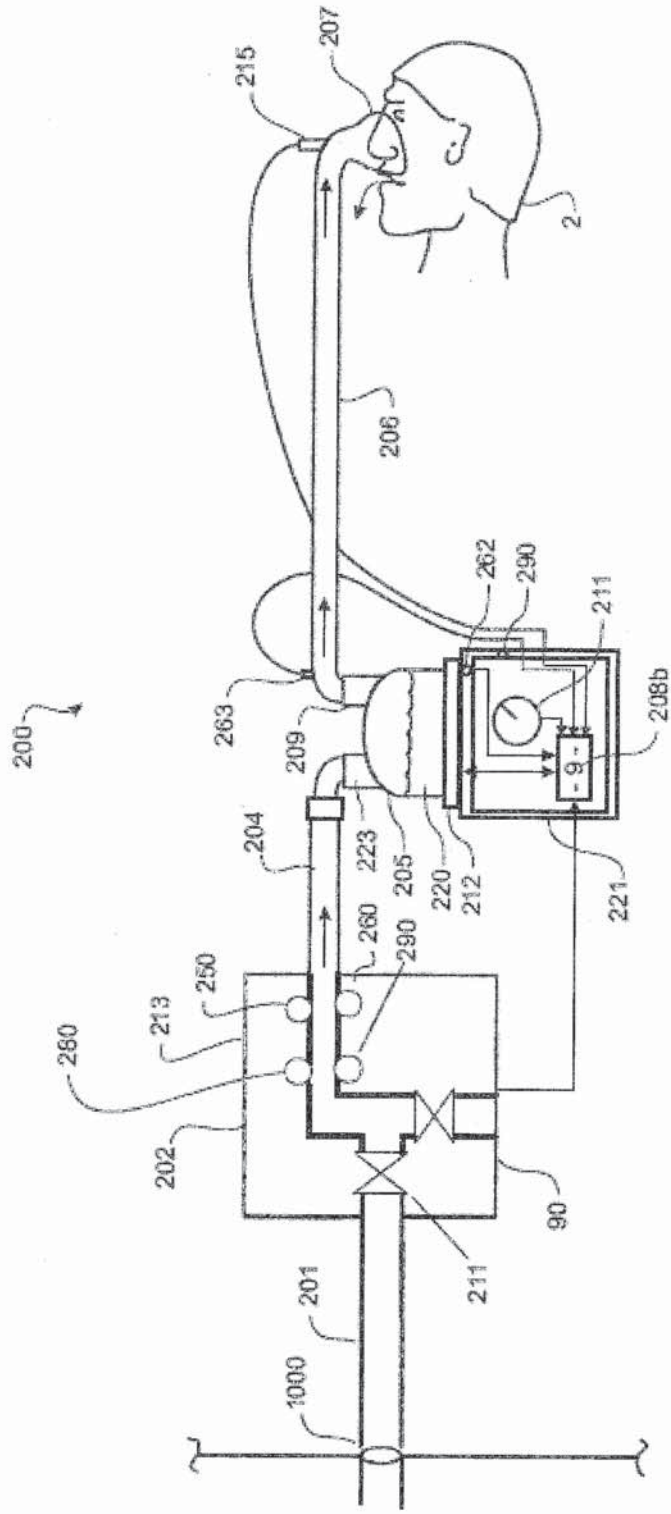
200
215
207
2
206
262
290
211
208b
263
209
204
223
205
220
212
221
260
290
250
213
280
202
90
211
201
1000

FIG. 6

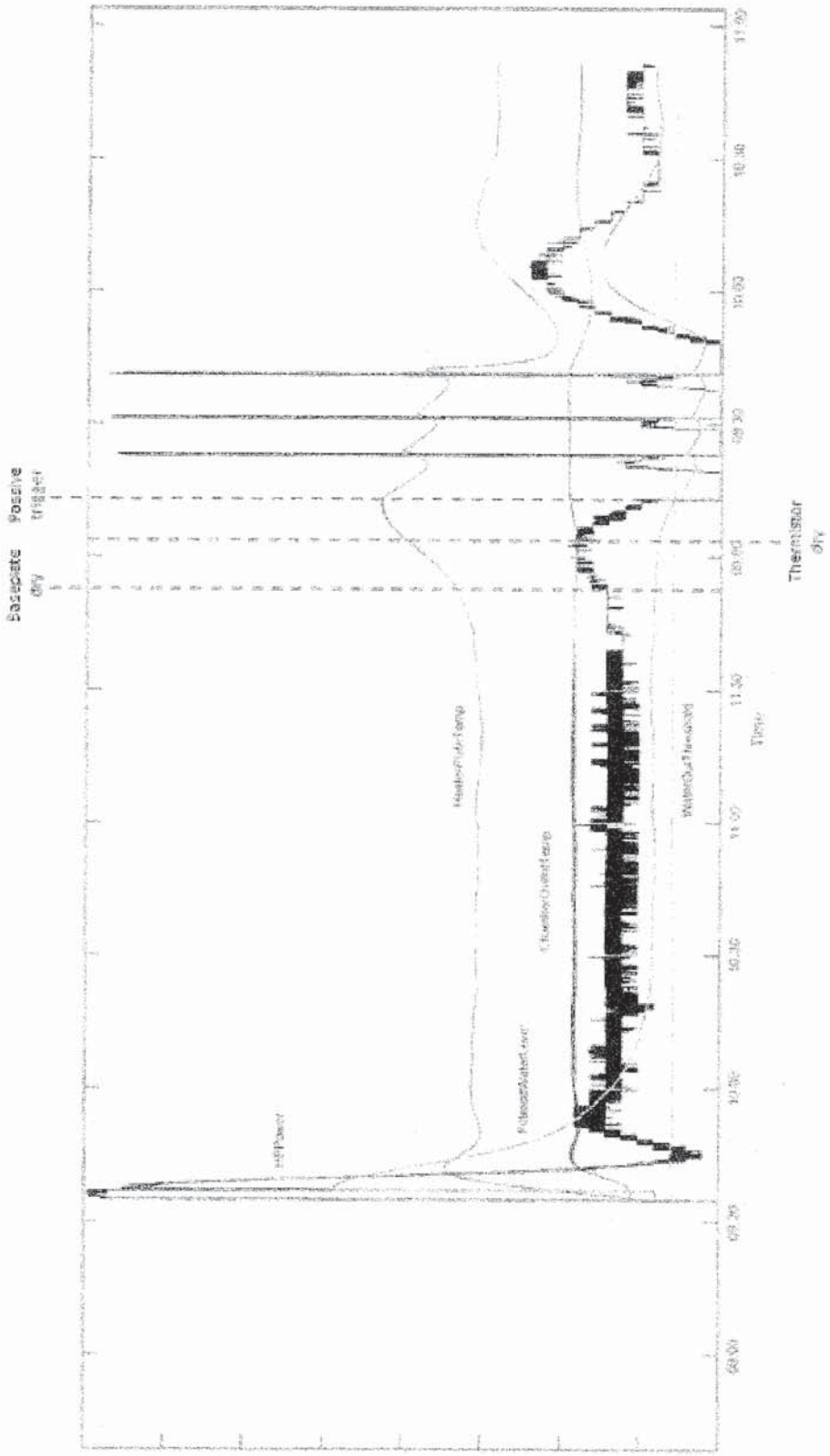

FIG. 7