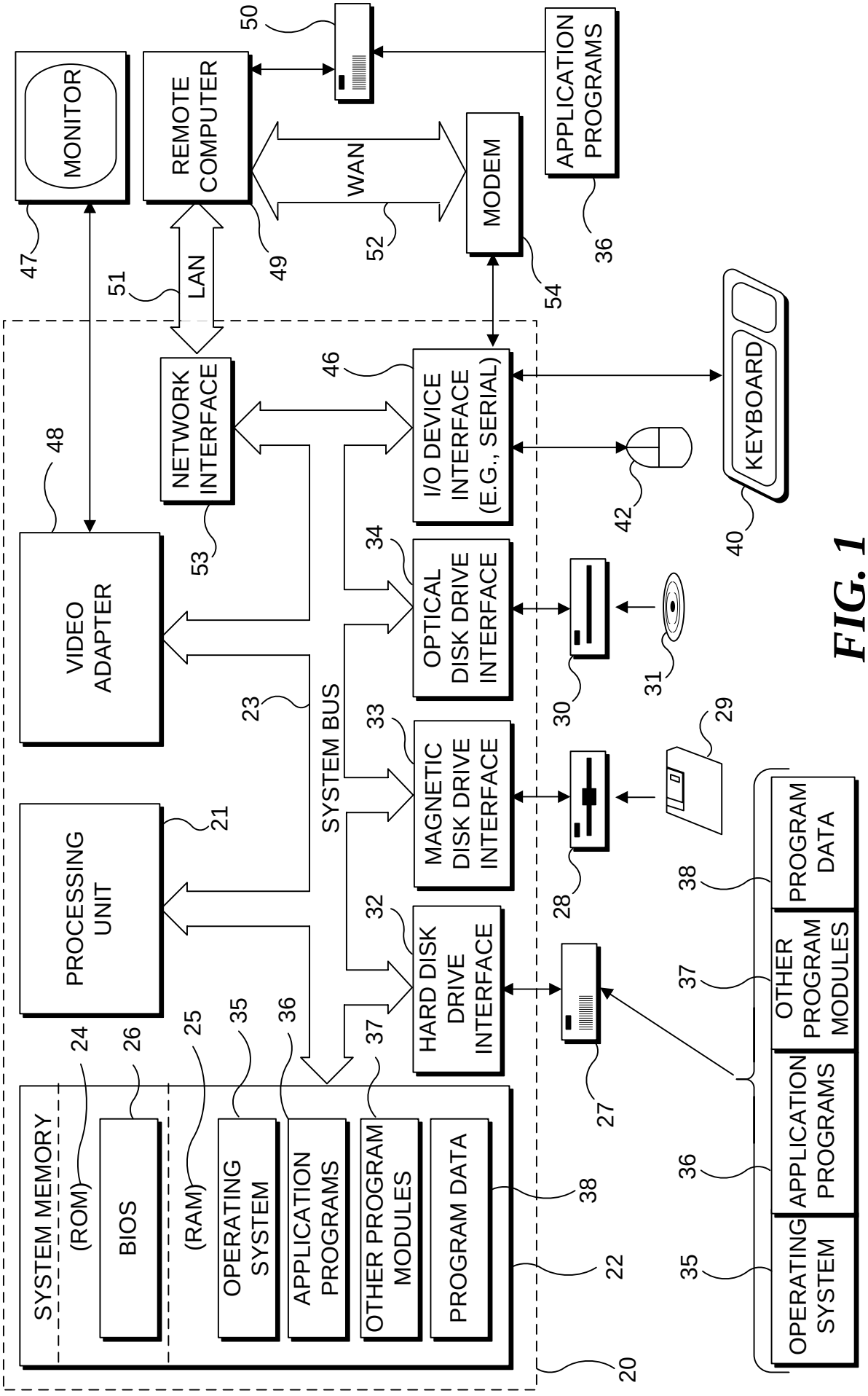
MONITOR
REMOTE COMPUTER
WAN
MODEM
APPLICATION PROGRAMS
LAN
NETWORK INTERFACE
I/O DEVICE INTERFACE (E.G., SERIAL)
KEYBOARD
VIDEO ADAPTER
OPTICAL DISK DRIVE INTERFACE
MAGNETIC DISK DRIVE INTERFACE
HARD DISK DRIVE INTERFACE
SYSTEM BUS
PROCESSING UNIT
SYSTEM MEMORY
(ROM)
BIOS
(RAM)
OPERATING SYSTEM
APPLICATION PROGRAMS
OTHER PROGRAM MODULES
PROGRAM DATA
20
21
22
23
24
25
26
27
28
29
30
31
32
33
34
35
36
37
38
40
42
46
47
48
49
50
51
52
53
54

FIG. 1

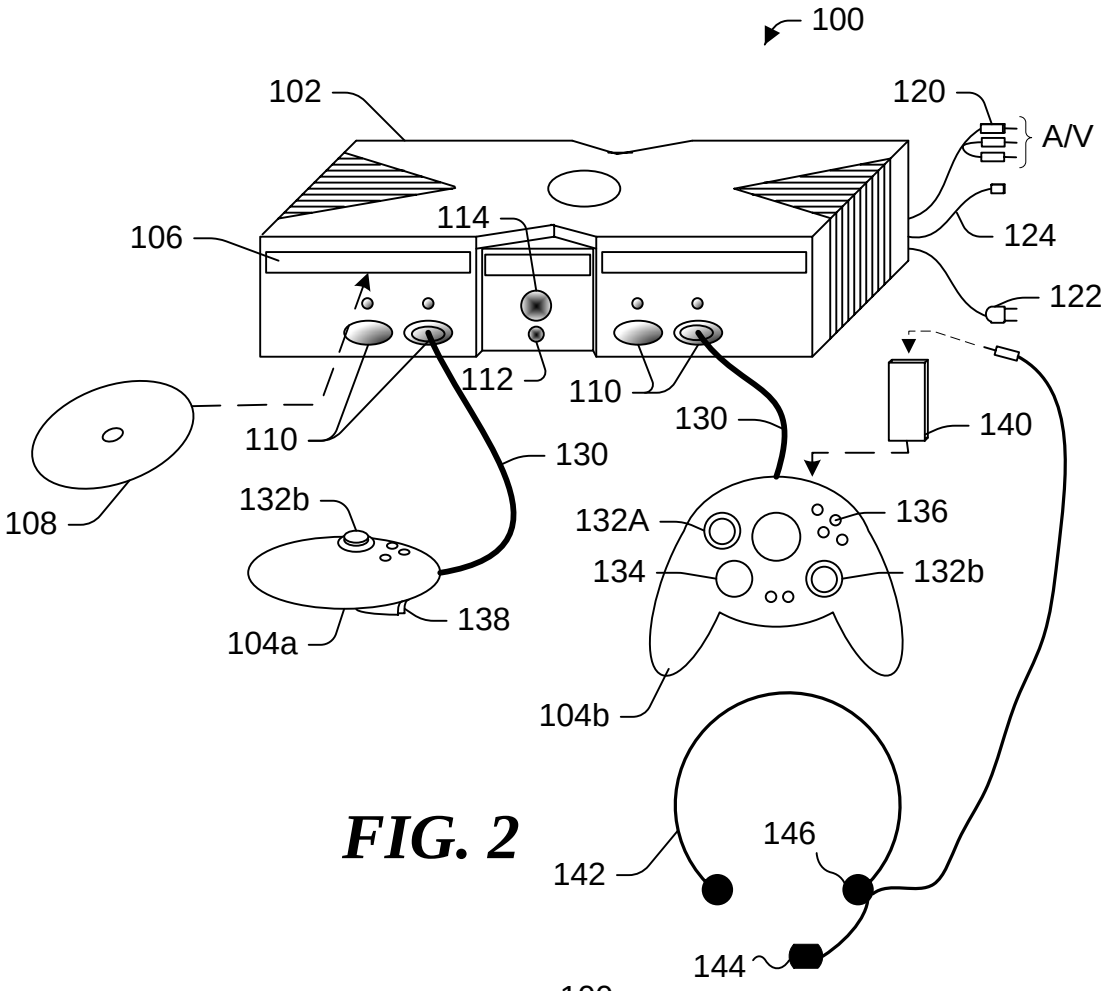
100
102
120
A/V
106
114
124
122
112
110
110
130
140
130
108
132b
132A
136
134
132b
138
104a
104b
142
146
144

FIG. 2

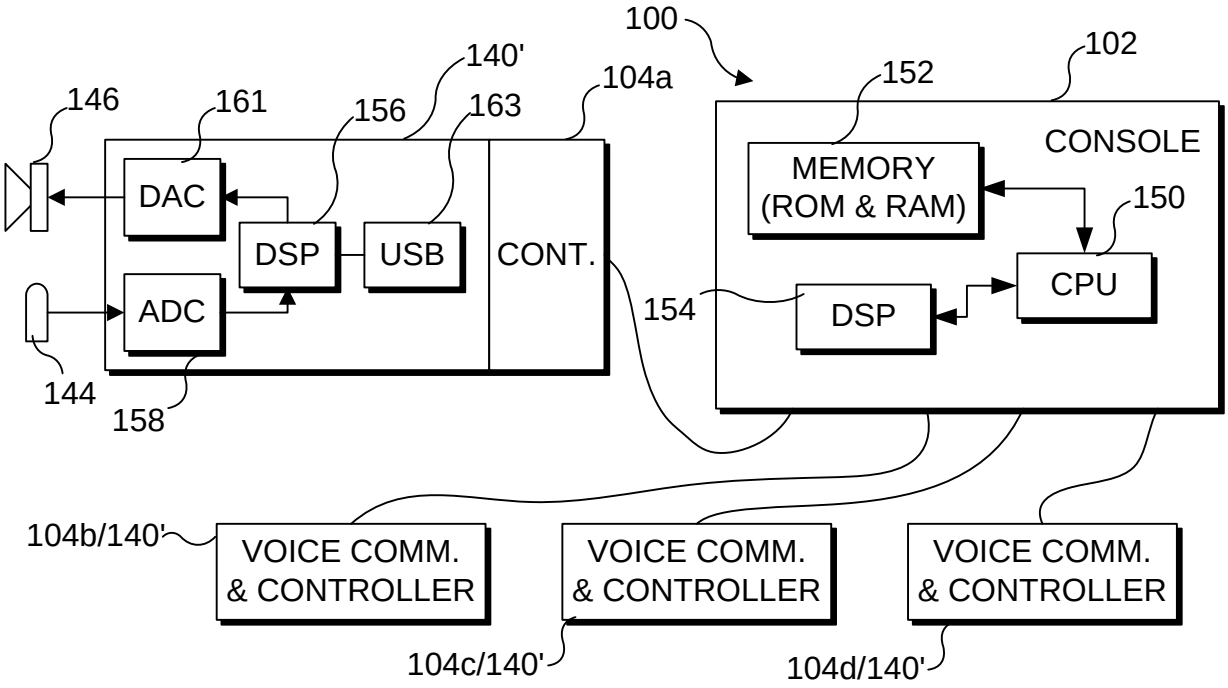
100
102
152
CONSOLE
MEMORY
(ROM & RAM)
150
CPU
DSP
154
140'
104a
146
161
156
163
DAC
DSP
USB
CONT.
ADC
144
158
104b/140'
VOICE COMM.
& CONTROLLER
VOICE COMM.
& CONTROLLER
VOICE COMM.
& CONTROLLER
104c/140'
104d/140'

FIG. 3

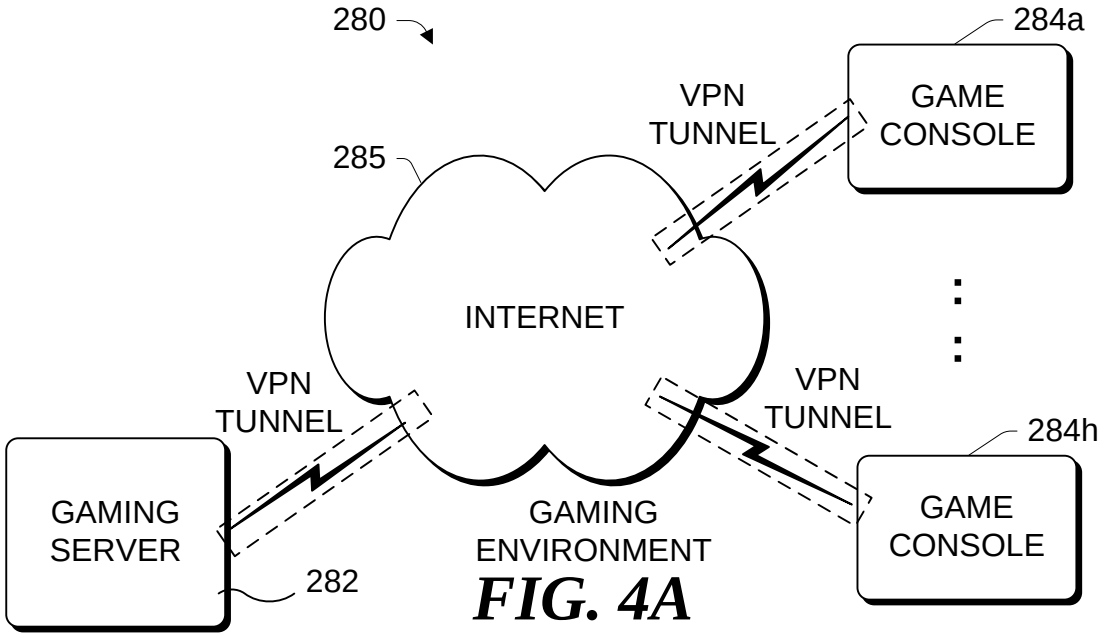

FIG. 4A

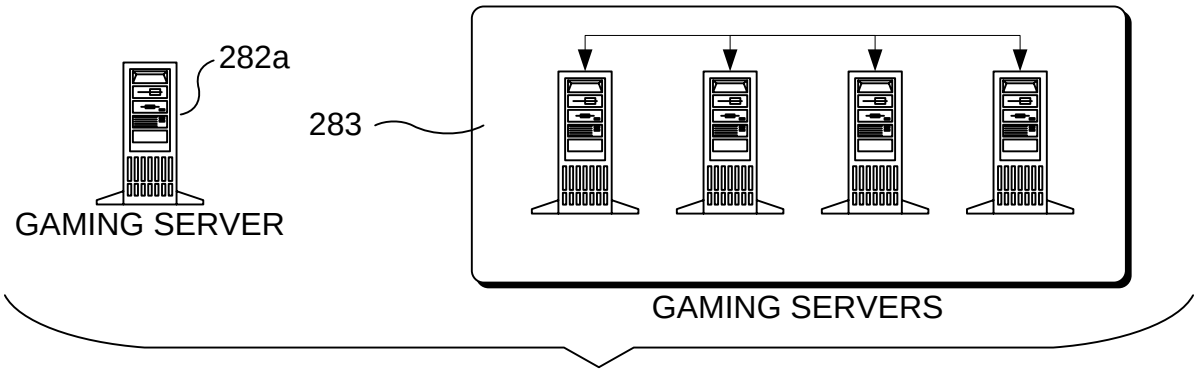

FIG. 4B

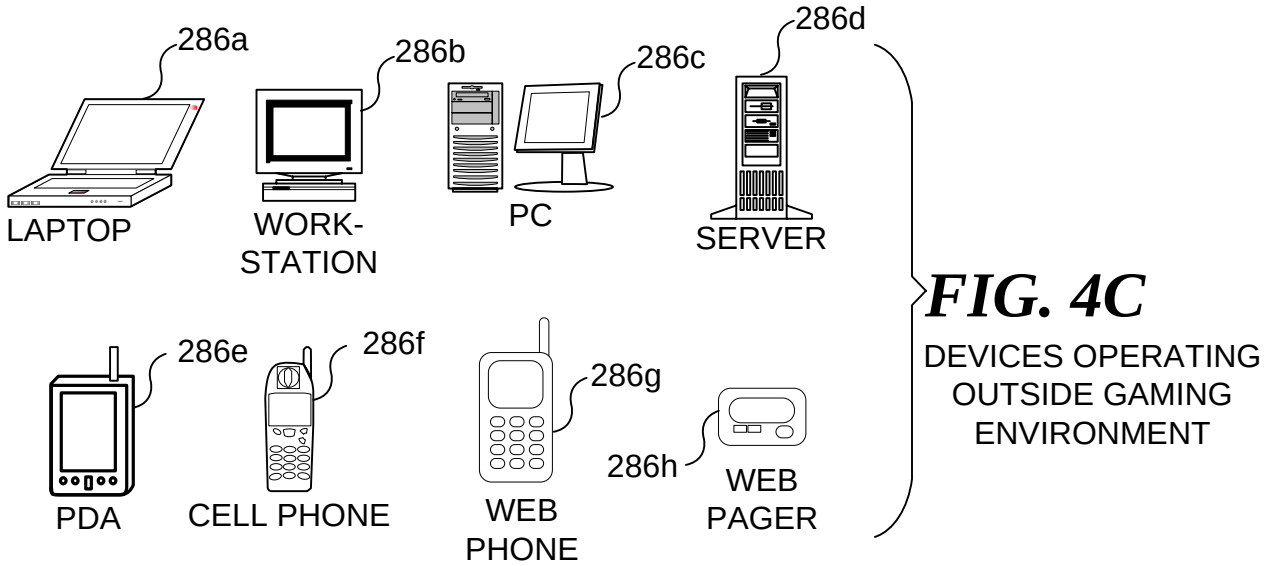

FIG. 4C

DEVICES OPERATING OUTSIDE GAMING ENVIRONMENT

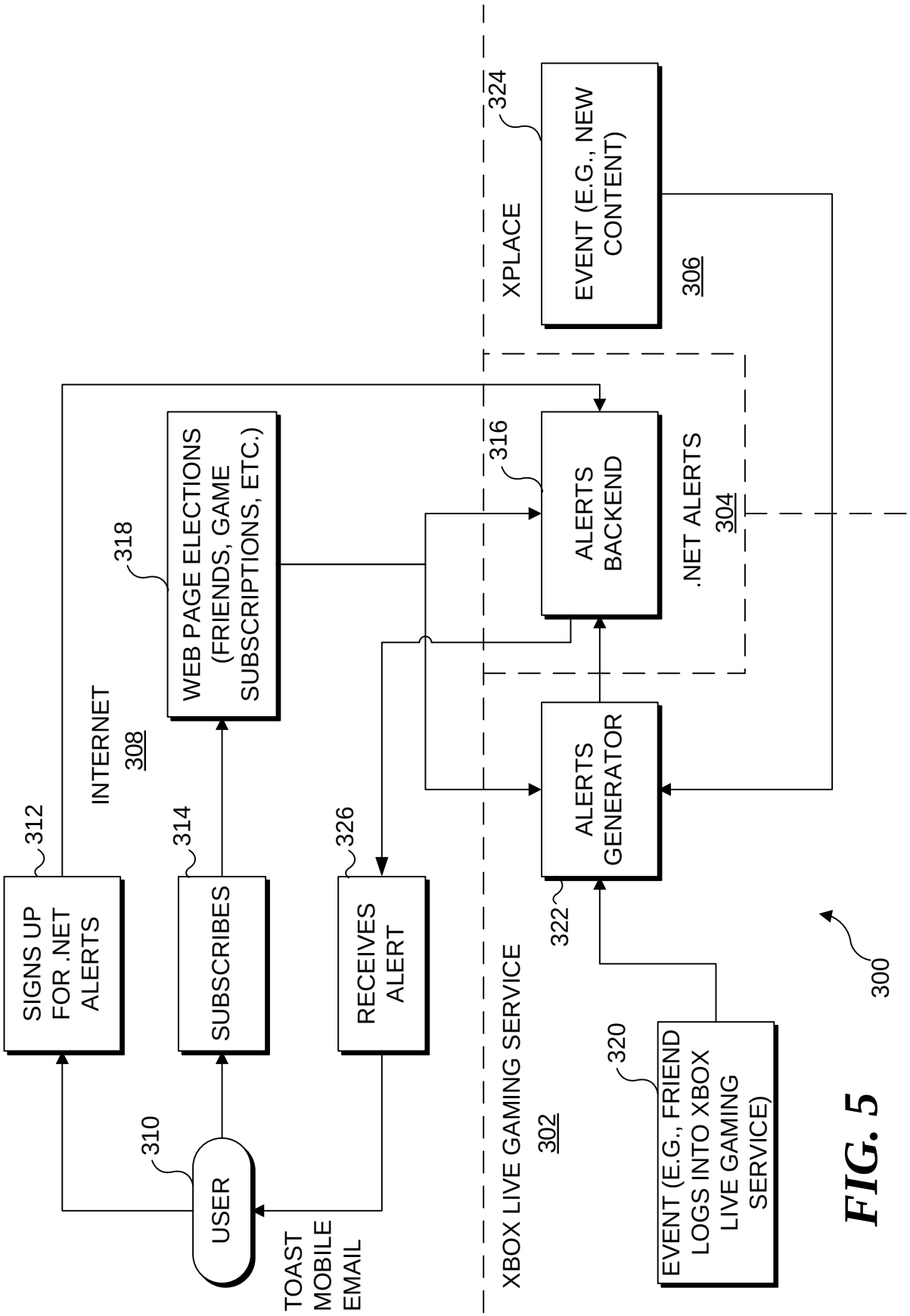
XBOX LIVE GAMING SERVICE
302
XPLACE
.NET ALERTS
304
INTERNET
308
USER
310
SIGNS UP FOR .NET ALERTS
312
SUBSCRIBES
314
ALERTS BACKEND
316
WEB PAGE ELECTIONS (FRIENDS, GAME SUBSCRIPTIONS, ETC.)
318
EVENT (E.G., FRIEND LOGS INTO XBOX LIVE GAMING SERVICE)
320
ALERTS GENERATOR
322
EVENT (E.G., NEW CONTENT)
324
RECEIVES ALERT
326
TOAST
MOBILE
EMAIL
306
300

FIG. 5

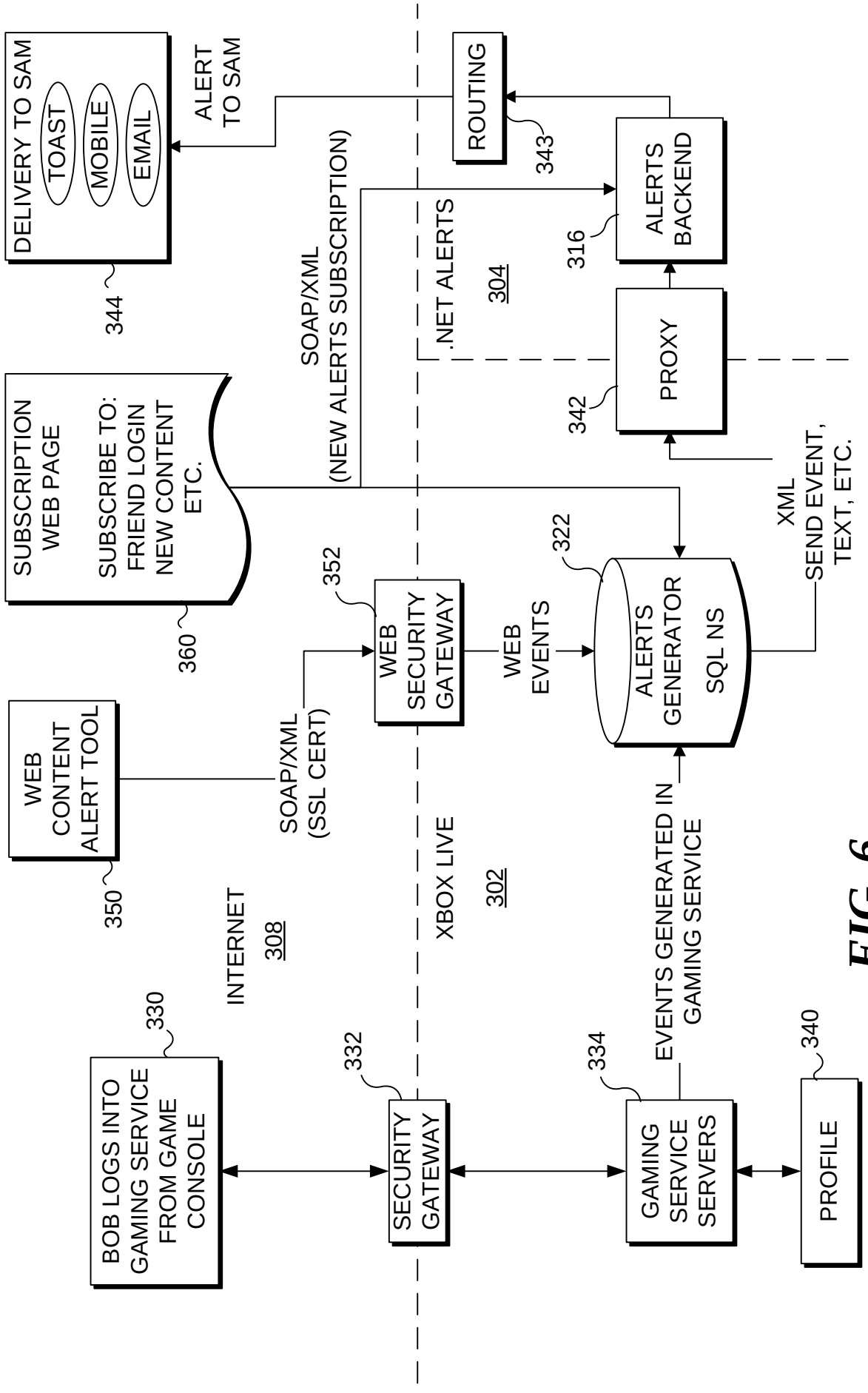
DELIVERY TO SAM
TOAST
MOBILE
EMAIL
344
ALERT TO SAM
ROUTING
343
ALERTS BACKEND
316
.NET ALERTS
304
SOAP/XML (NEW ALERTS SUBSCRIPTION)
PROXY
342
SUBSCRIPTION WEB PAGE
SUBSCRIBE TO: FRIEND LOGIN NEW CONTENT ETC.
360
XML SEND EVENT, TEXT, ETC.
352
WEB SECURITY GATEWAY
WEB EVENTS
322
ALERTS GENERATOR SQL NS
WEB CONTENT ALERT TOOL
350
SOAP/XML (SSL CERT)
INTERNET
308
XBOX LIVE
302
EVENTS GENERATED IN GAMING SERVICE
330
BOB LOGS INTO GAMING SERVICE FROM GAME CONSOLE
332
SECURITY GATEWAY
334
GAMING SERVICE SERVERS
340
PROFILE

FIG. 6

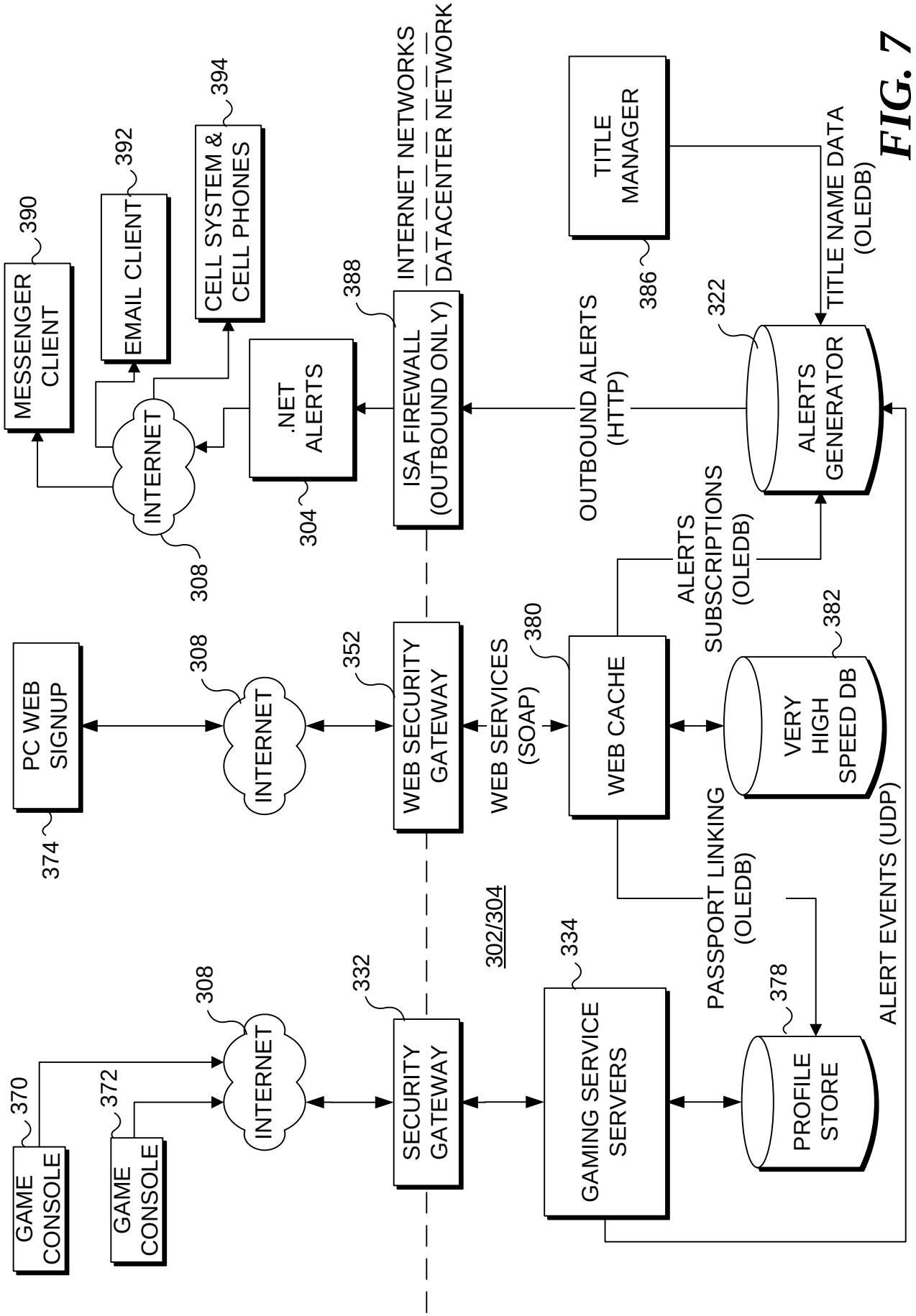
GAME CONSOLE
370
GAME CONSOLE
372
INTERNET
308
SECURITY GATEWAY
332
302/304
GAMING SERVICE SERVERS
334
PROFILE STORE
378
PASSPORT LINKING (OLEDB)
ALERT EVENTS (UDP)
PC WEB SIGNUP
374
INTERNET
308
WEB SECURITY GATEWAY
352
WEB SERVICES (SOAP)
WEB CACHE
380
VERY HIGH SPEED DB
382
ALERTS SUBSCRIPTIONS (OLEDB)
ALERTS GENERATOR
322
TITLE NAME DATA (OLEDB)
TITLE MANAGER
386
OUTBOUND ALERTS (HTTP)
ISA FIREWALL (OUTBOUND ONLY)
388
INTERNET NETWORKS
DATACENTER NETWORK
.NET ALERTS
304
INTERNET
308
MESSENGER CLIENT
390
EMAIL CLIENT
392
CELL SYSTEM & CELL PHONES
394

FIG. 7

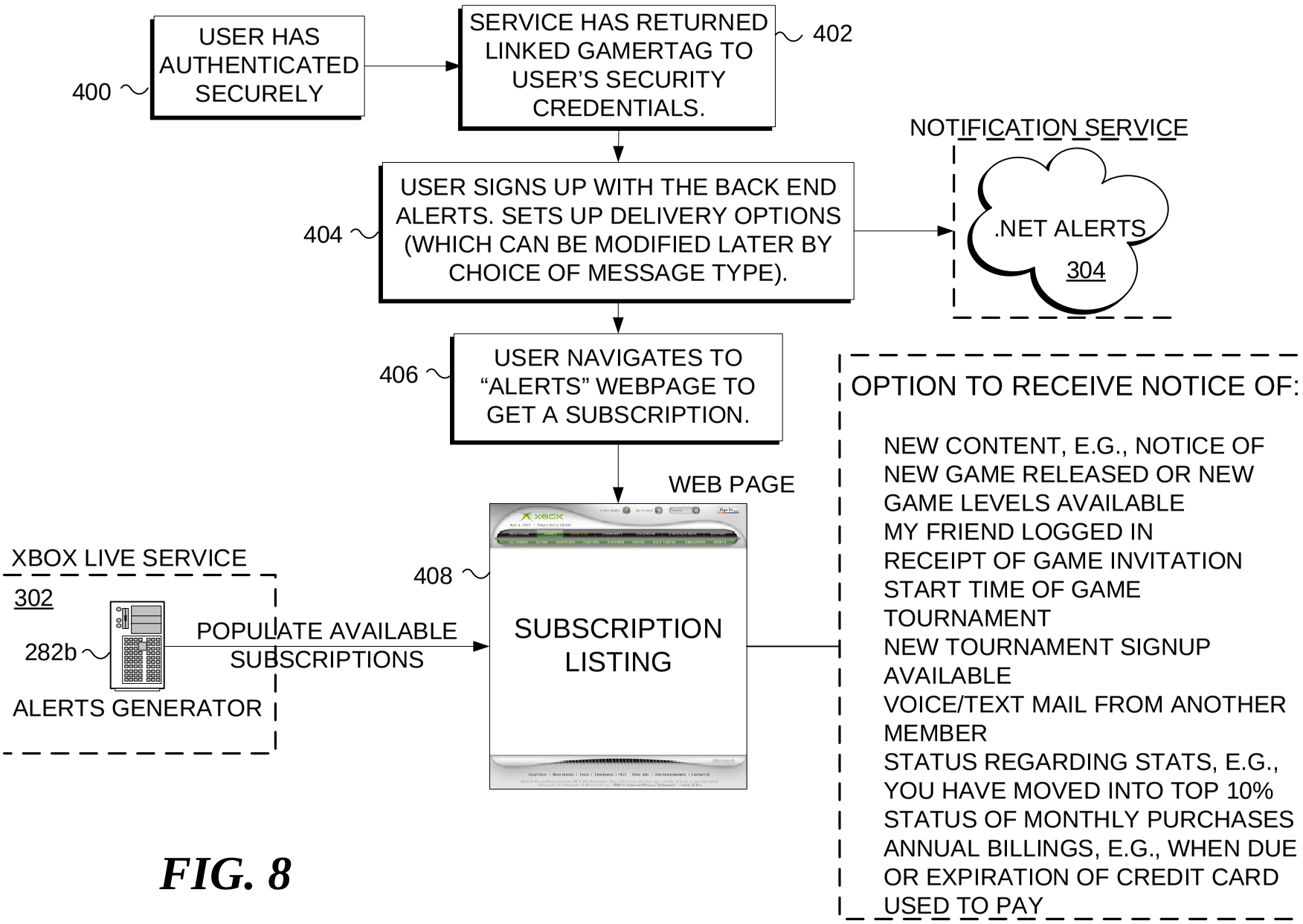
USER HAS AUTHENTICATED SECURELY
400
SERVICE HAS RETURNED LINKED GAMERTAG TO USER'S SECURITY CREDENTIALS.
402
USER SIGNS UP WITH THE BACK END ALERTS. SETS UP DELIVERY OPTIONS (WHICH CAN BE MODIFIED LATER BY CHOICE OF MESSAGE TYPE).
404
NOTIFICATION SERVICE
.NET ALERTS
304
USER NAVIGATES TO "ALERTS" WEBPAGE TO GET A SUBSCRIPTION.
406
WEB PAGE
408
SUBSCRIPTION LISTING
XBOX LIVE SERVICE
302
282b
ALERTS GENERATOR
POPULATE AVAILABLE SUBSCRIPTIONS
OPTION TO RECEIVE NOTICE OF:
NEW CONTENT, E.G., NOTICE OF NEW GAME RELEASED OR NEW GAME LEVELS AVAILABLE
MY FRIEND LOGGED IN
RECEIPT OF GAME INVITATION
START TIME OF GAME TOURNAMENT
NEW TOURNAMENT SIGNUP AVAILABLE
VOICE/TEXT MAIL FROM ANOTHER MEMBER
STATUS REGARDING STATS, E.G., YOU HAVE MOVED INTO TOP 10%
STATUS OF MONTHLY PURCHASES
ANNUAL BILLINGS, E.G., WHEN DUE OR EXPIRATION OF CREDIT CARD USED TO PAY

FIG. 8