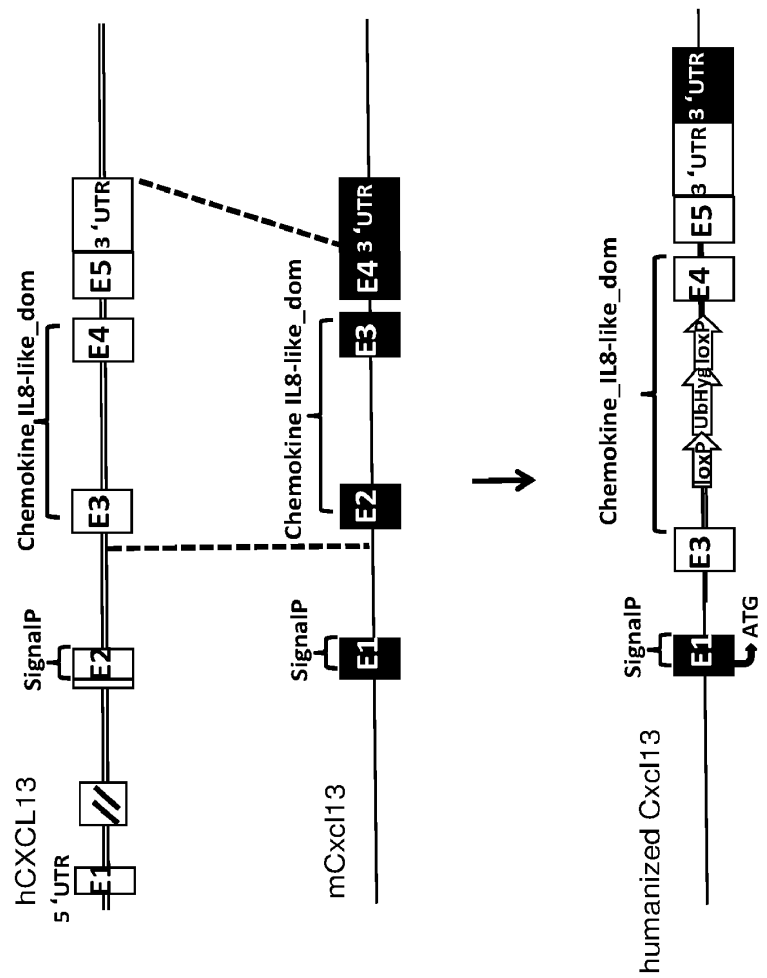
hCXCL13
5 'UTR
E1
SignalP
E2
Chemokine_IL8-like_dom
E3
E4
E5
3 'UTR
mCxcl13
SignalP
E1
Chemokine IL8-like_dom
E2
E3
E4
3 'UTR
humanized Cxcl13
SignalP
E1
ATG
E3
Chemokine_IL8-like_dom
loxP
UbHyg
loxP
E4
E5
3 'UTR
3 'UTR

FIG. 1A

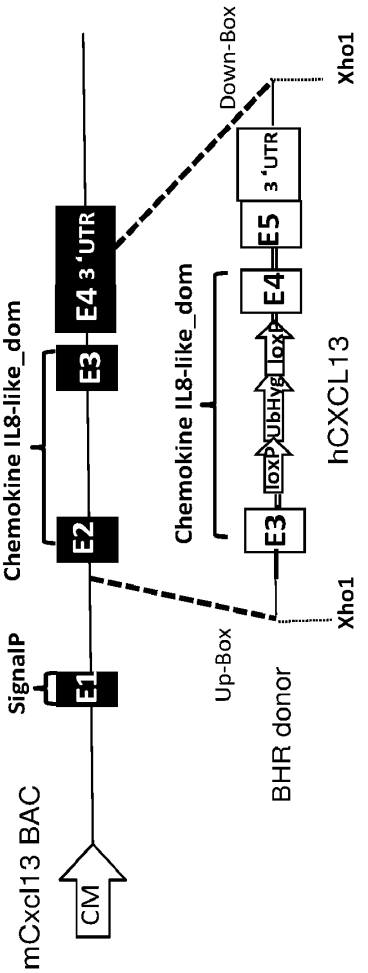

FIG. 1B

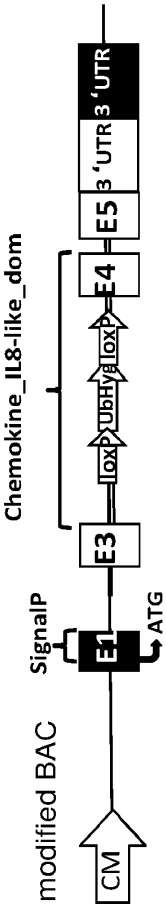

FIG. 1C

FIGS. 1B-1C

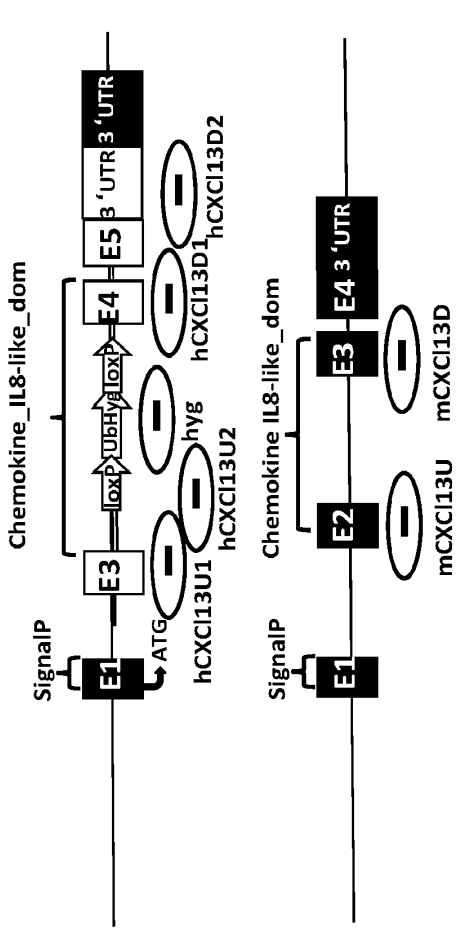

FIG.1D

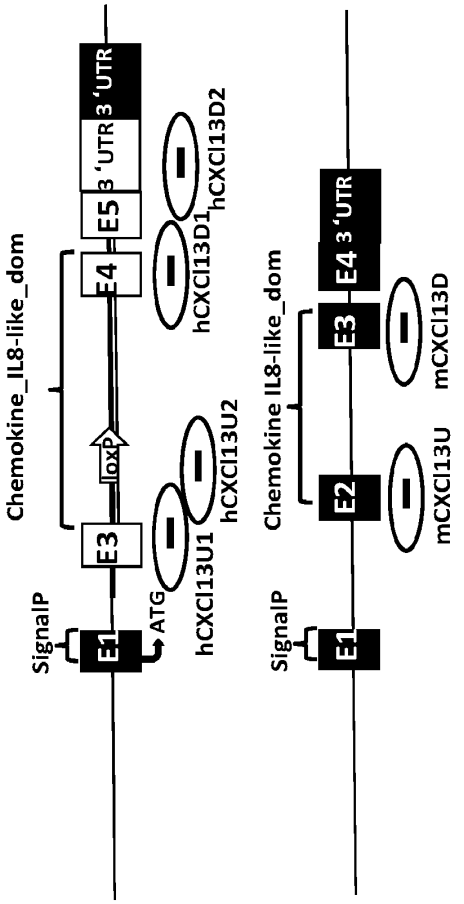

FIG.1E

FIGS. 1D – 1E

Mouse, human and hybrid CXCL13

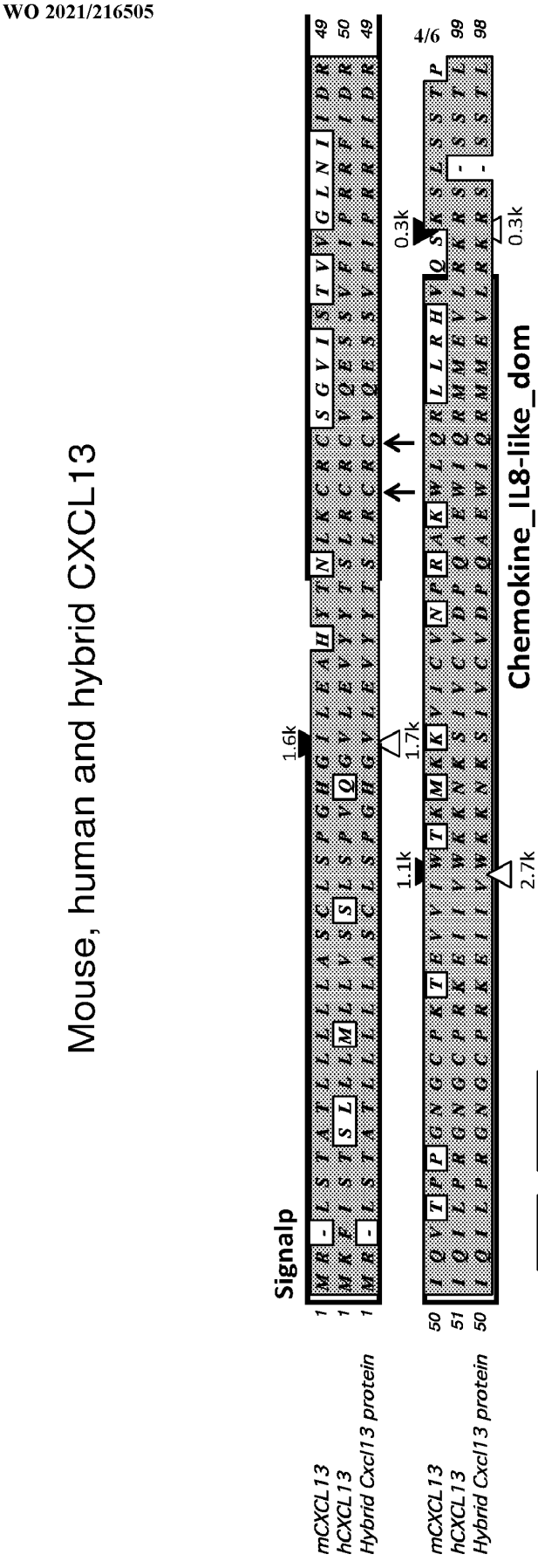

FIG. 1F

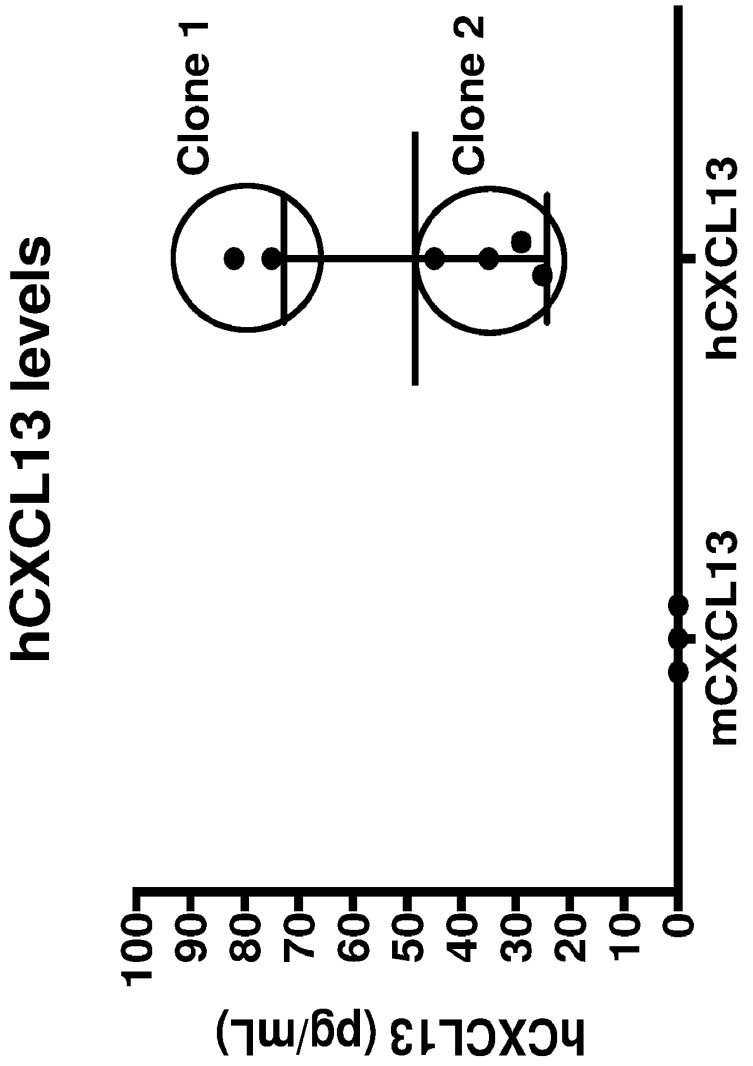
hCXCL13 levels
Clone 1
Clone 2
hCXCL13
mCXCL13
hCXCL13 (pg/mL)
100
90
80
70
60
50
40
30
20
10
0

FIG. 2

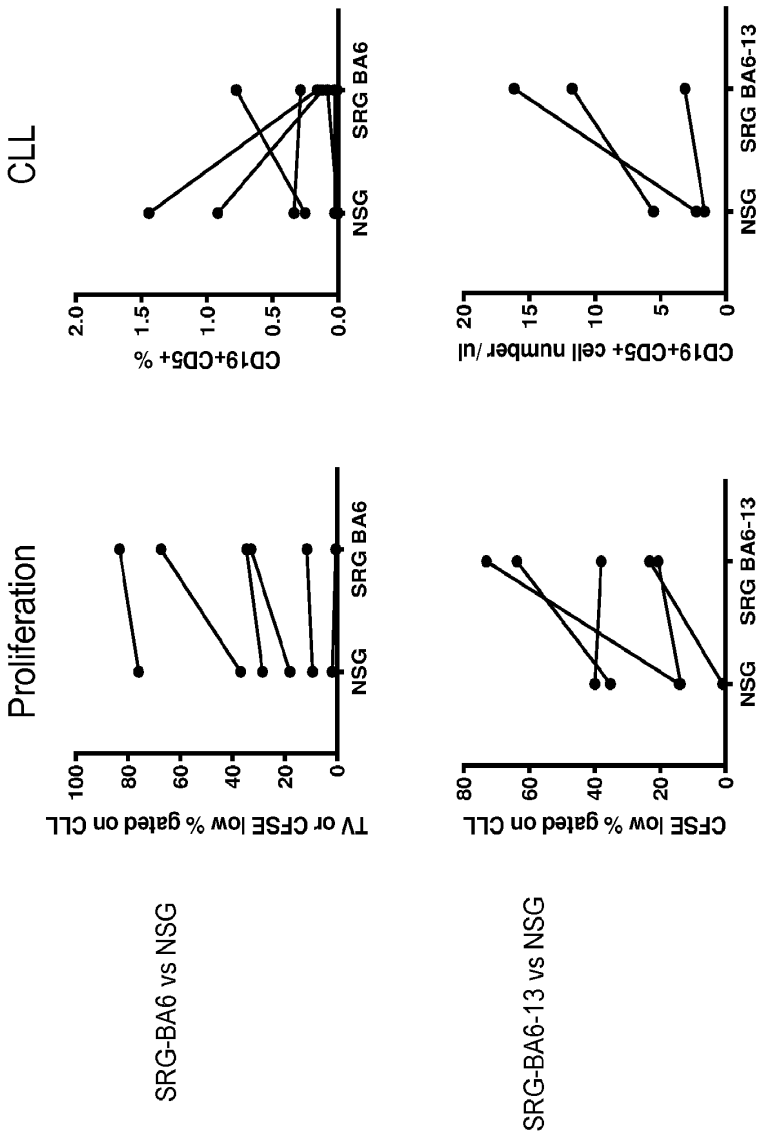
CLL
Proliferation
CD19+CD5+ %
CD19+CD5+ cell number /ul
TV or CFSE low % gated on CLL
CFSE low % gated on CLL
NSG
SRG BA6
SRG BA6-13
SRG-BA6 vs NSG
SRG-BA6-13 vs NSG

FIG. 3