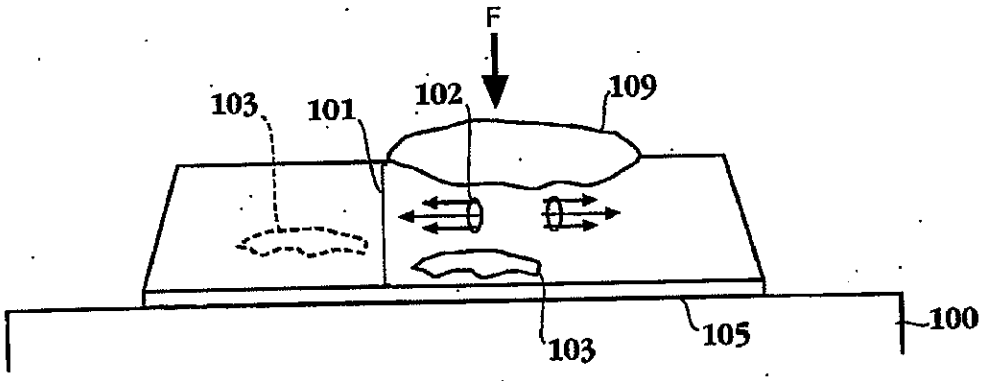

Fig. 1A

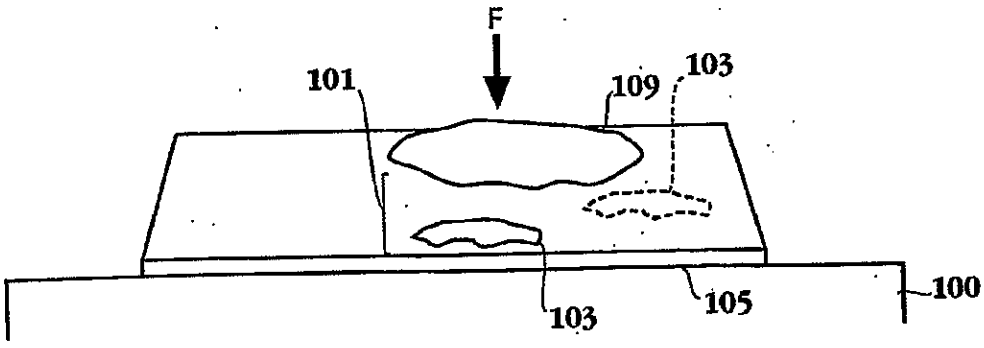

Fig. 1B

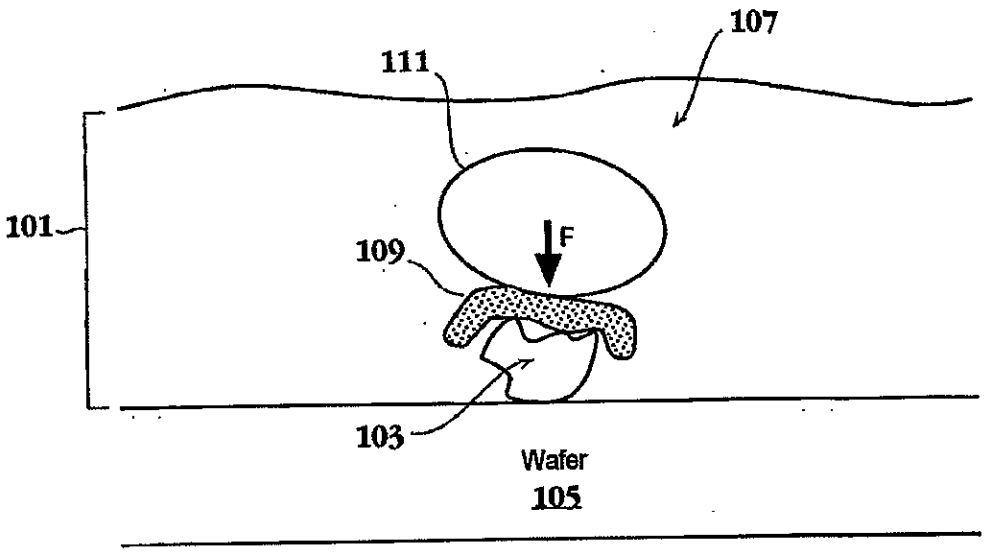
107
111
101
109
F
103
Wafer
105

Fig. 2A

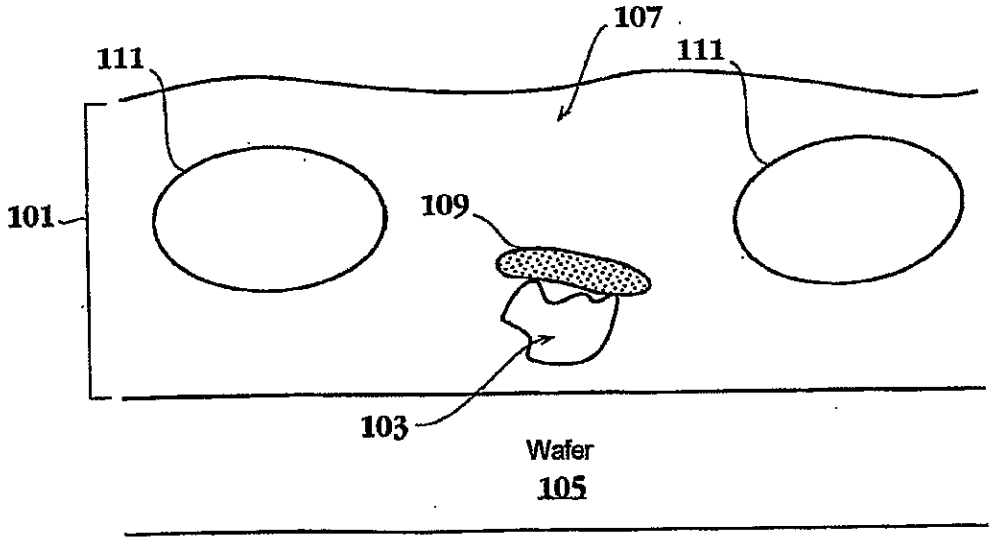
107
111
111
101
109
103
Wafer
105

Fig. 2B

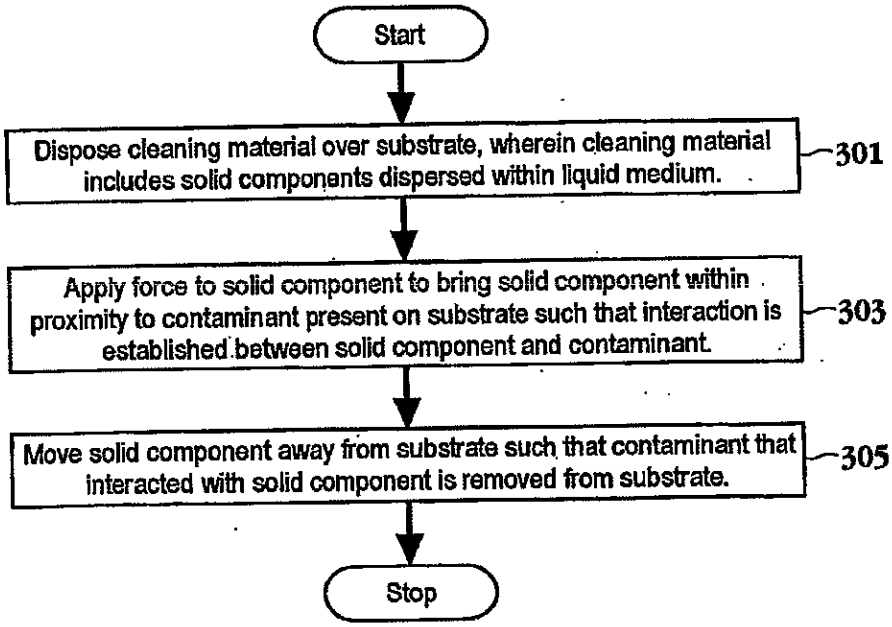
Start
Dispose cleaning material over substrate, wherein cleaning material includes solid components dispersed within liquid medium.
301
Apply force to solid component to bring solid component within proximity to contaminant present on substrate such that interaction is established between solid component and contaminant.
303
Move solid component away from substrate such that contaminant that interacted with solid component is removed from substrate.
305
Stop

Fig. 3

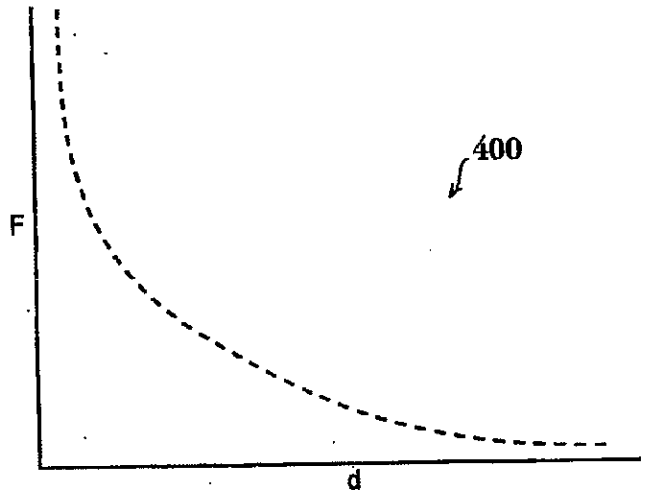

Fig. 4

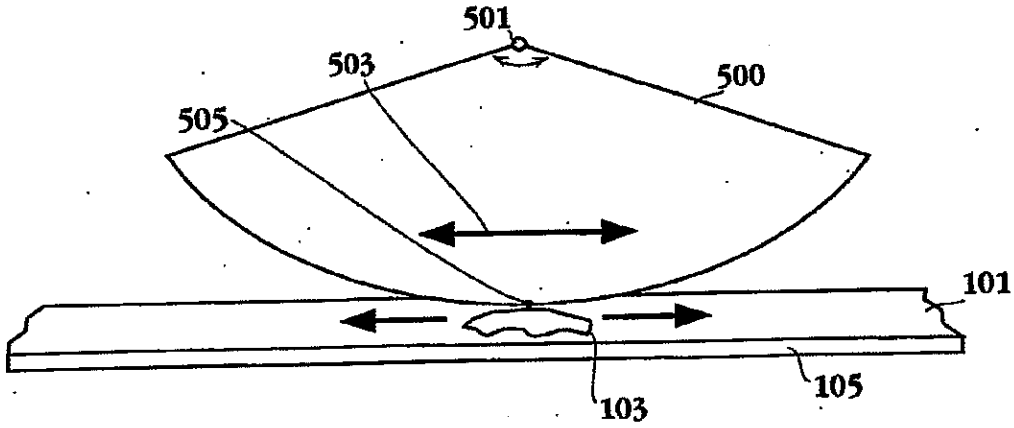
501
503
500
505
101
103
105

Fig. 5

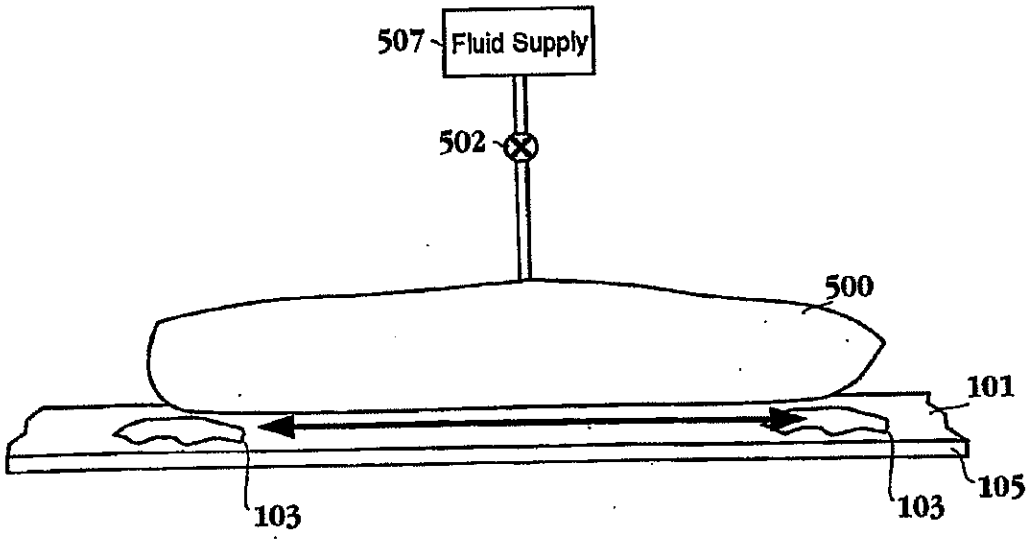
507
Fluid Supply
502
500
101
103
103
105

Fig. 6

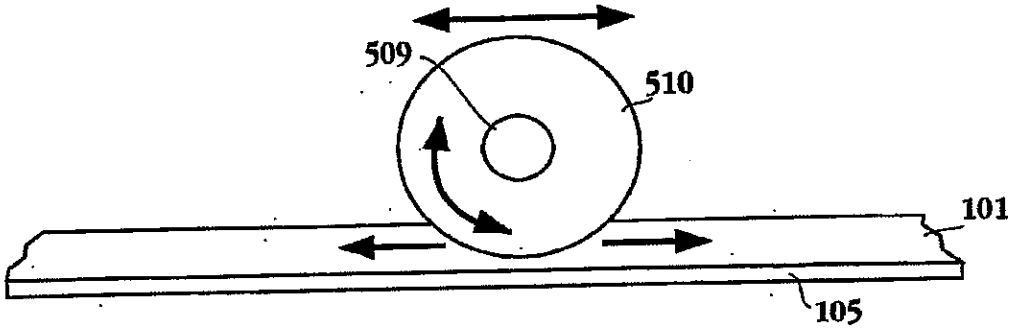

Fig. 7

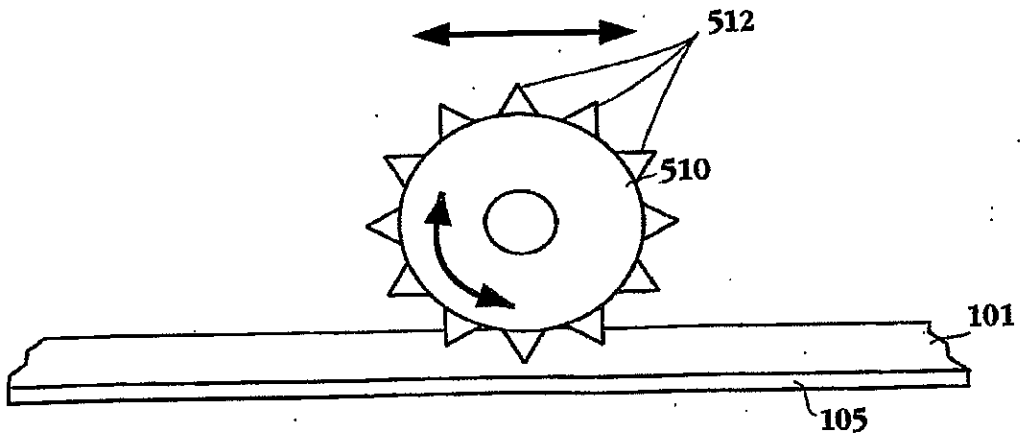

Fig. 8

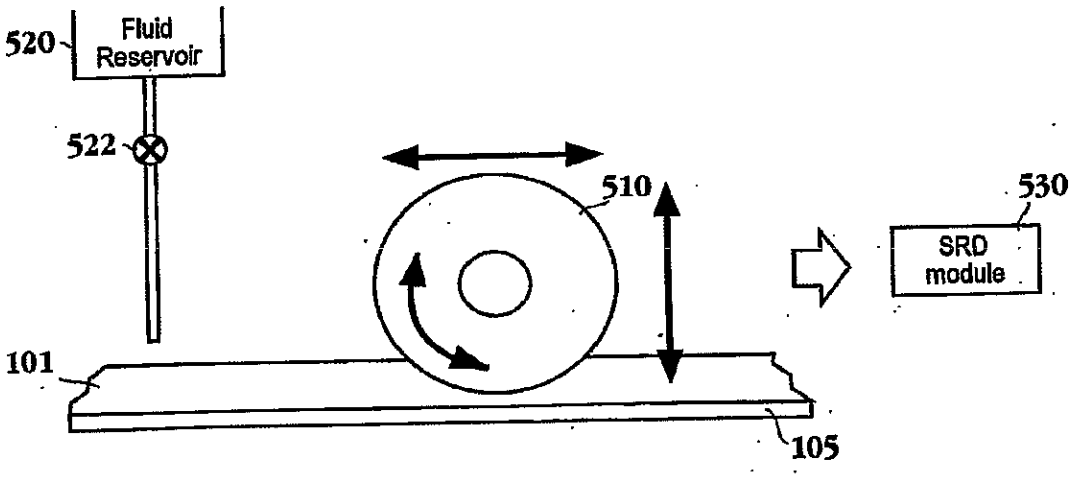

Fig. 9