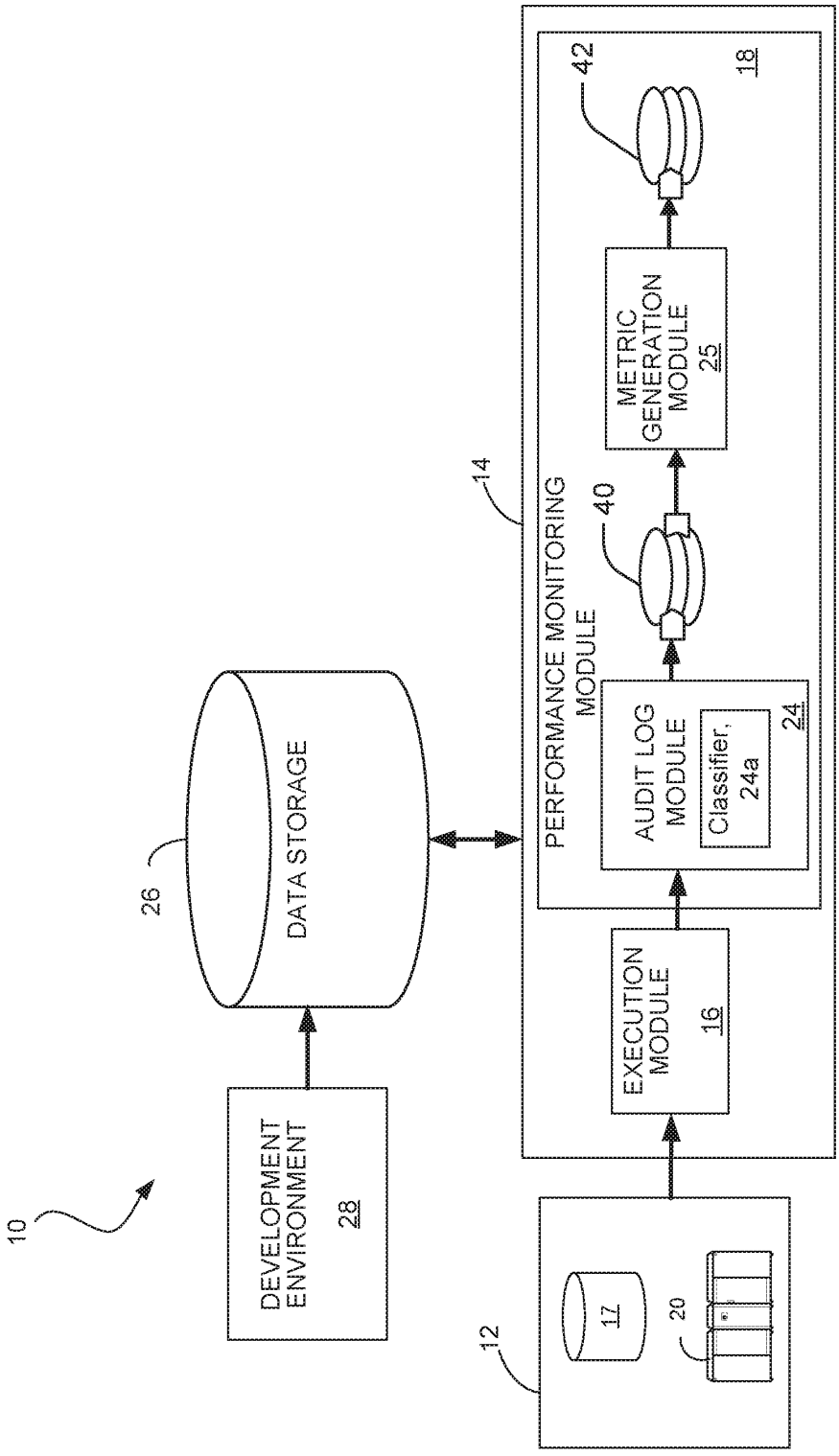
10
DEVELOPMENT ENVIRONMENT 28
DATA STORAGE
26
14
PERFORMANCE MONITORING MODULE
AUDIT LOG MODULE
Classifier, 24a
24
40
METRIC GENERATION MODULE 25
42
18
EXECUTION MODULE 16
12
17
20

FIG. 1

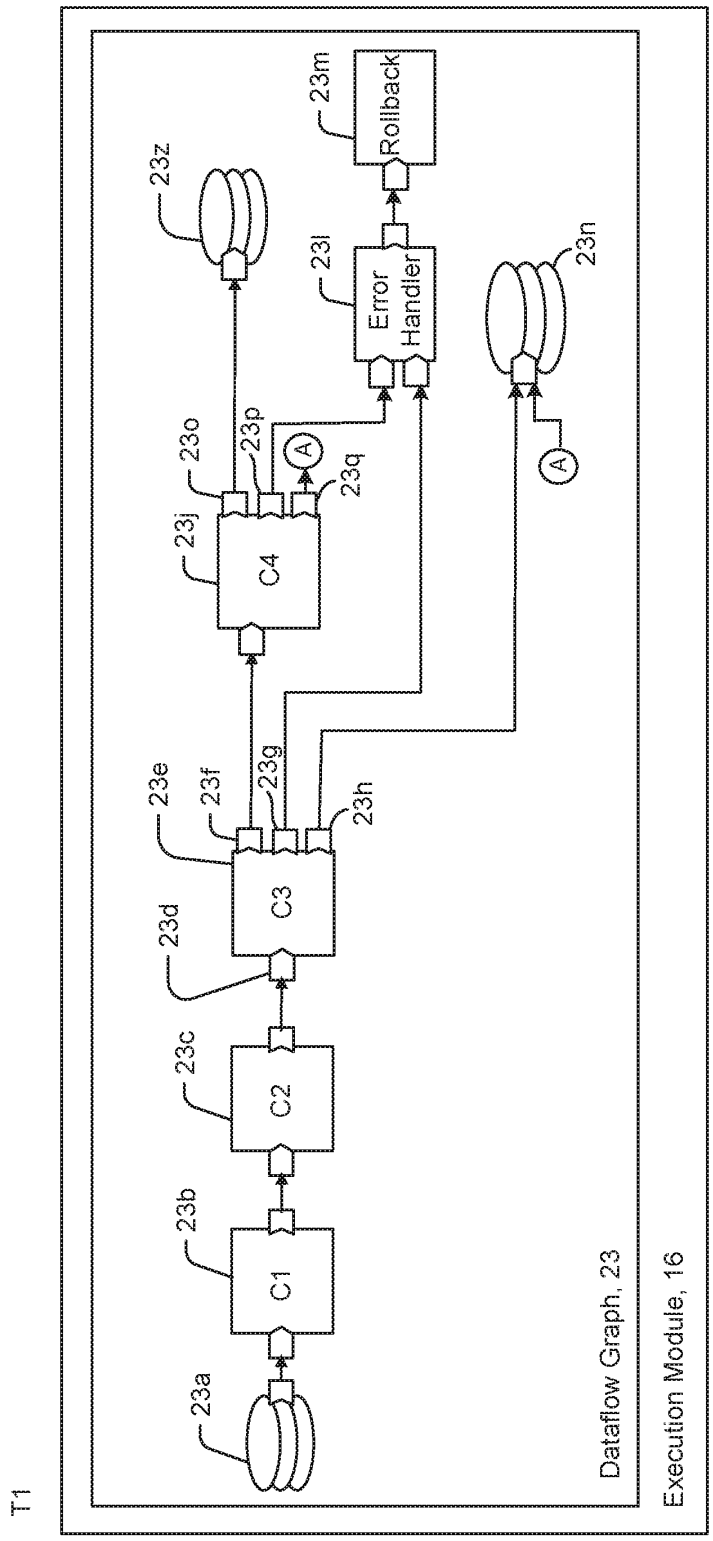
T1
Execution Module, 16
Dataflow Graph, 23
23a
C1
23b
C2
23c
23d
C3
23e
23f
23g
23h
C4
23j
23o
23p
23q
A
A
23z
23l
Error Handler
23m
Rollback
23n

FIG. 2A

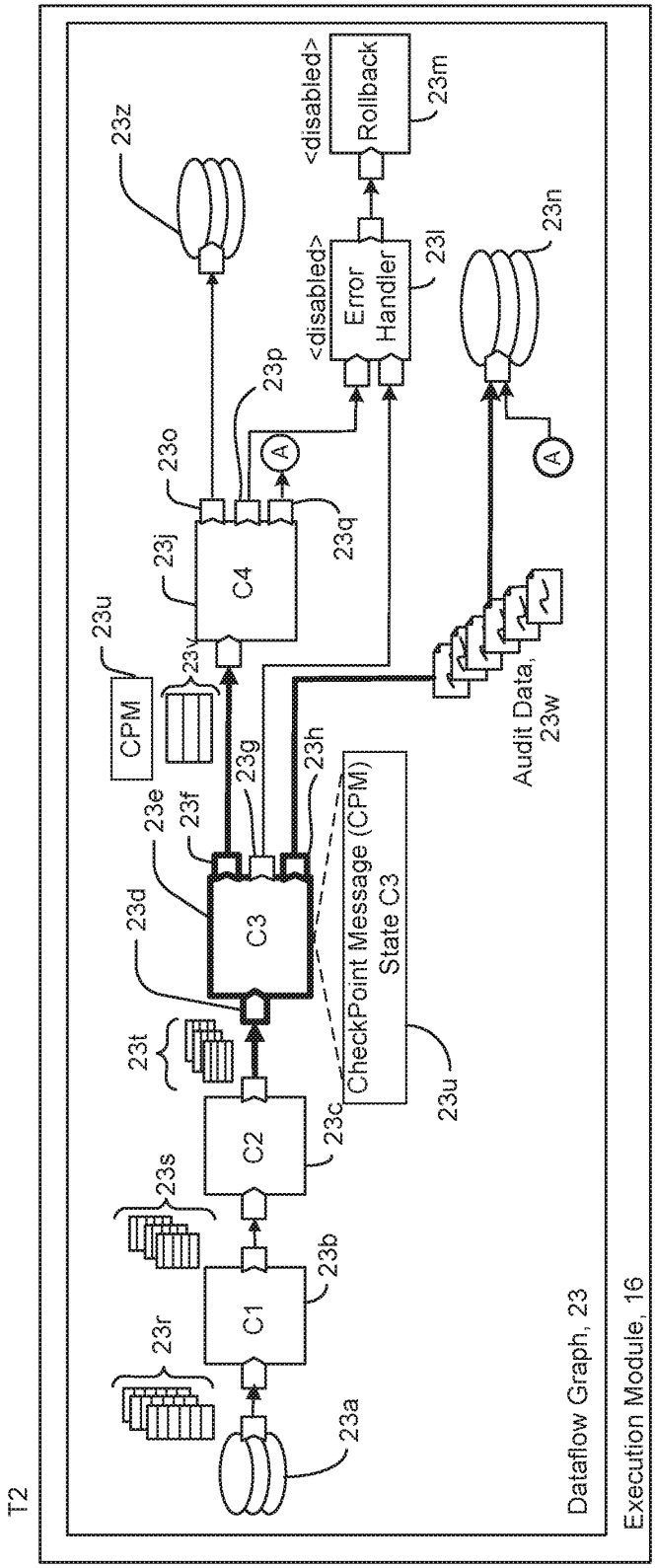
T2
Execution Module, 16
Dataflow Graph, 23
23a
23r
C1
23b
23s
C2
23c
23t
C3
23d
23e
23f
23g
23h
CheckPoint Message (CPM)
State C3
23u
CPM
23u
23v
C4
23j
23o
23p
23q
23z
<disabled>
Error
Handler
23l
<disabled>
Rollback
23m
23n
Audit Data,
23w

FIG. 2B

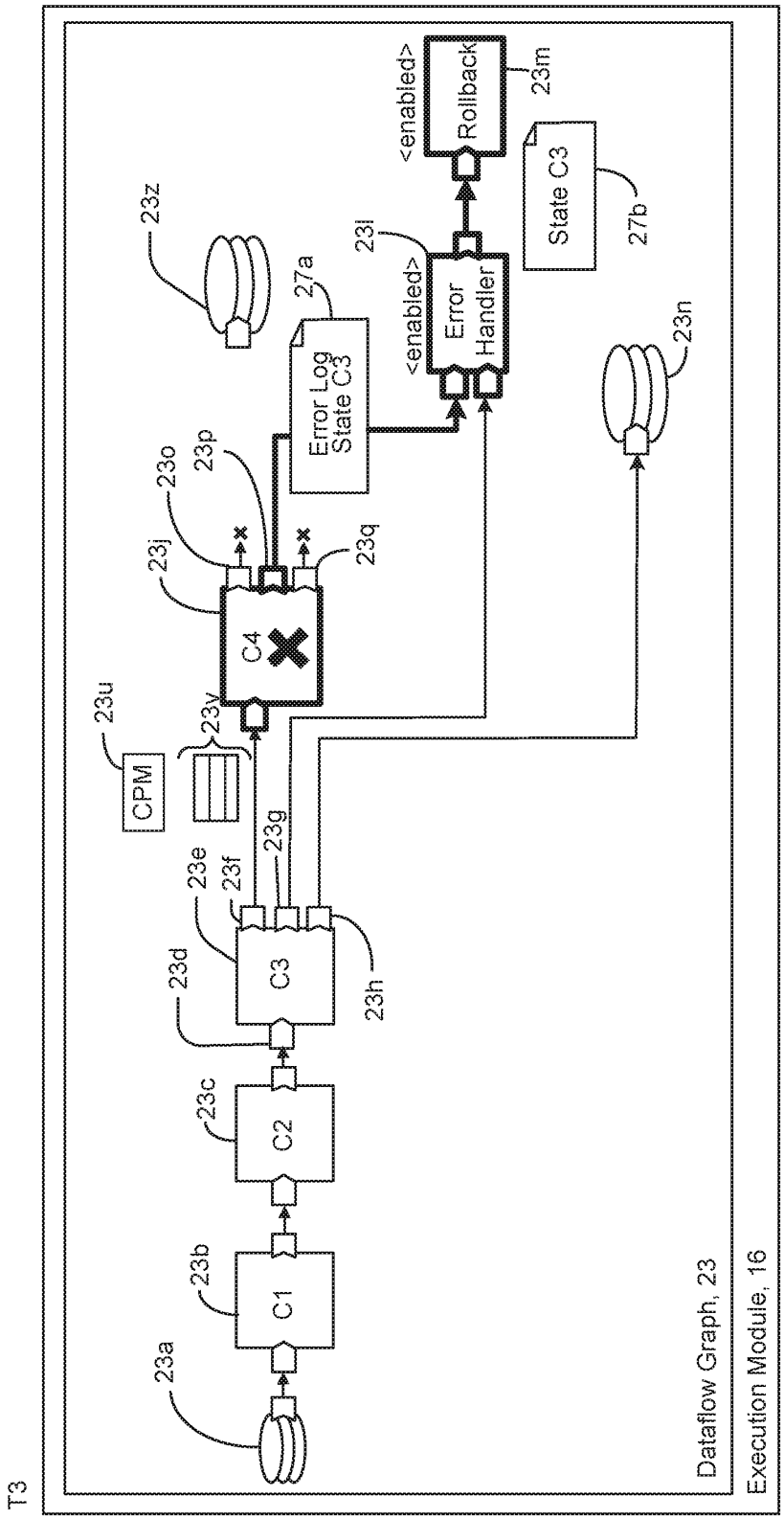
T3
Execution Module, 16
Dataflow Graph, 23
23a
23b
C1
23c
C2
23d
C3
23e
23f
23g
23h
23u
CPM
23y
C4
23j
23o
23p
23q
23z
27a
Error Log
State C3
23l
<enabled>
Error
Handler
<enabled>
Rollback
23m
State C3
27b
23n

FIG. 2C

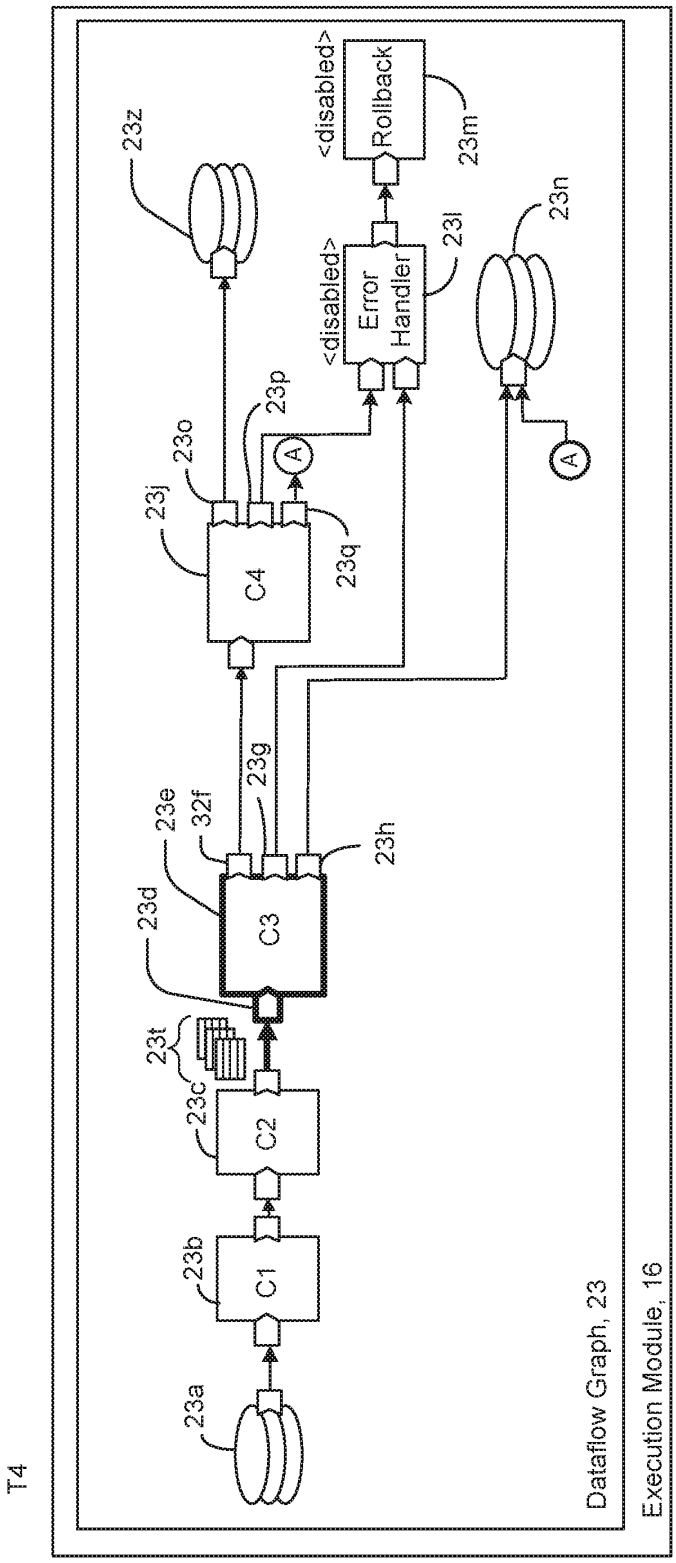
T4
Execution Module, 16
Dataflow Graph, 23
23a
23b
C1
23c
C2
23t
23d
C3
23e
32f
23g
23h
23j
C4
23o
23p
23q
A
A
<disabled>
Error Handler
23l
<disabled>
Rollback
23m
23n
23z

FIG. 2D

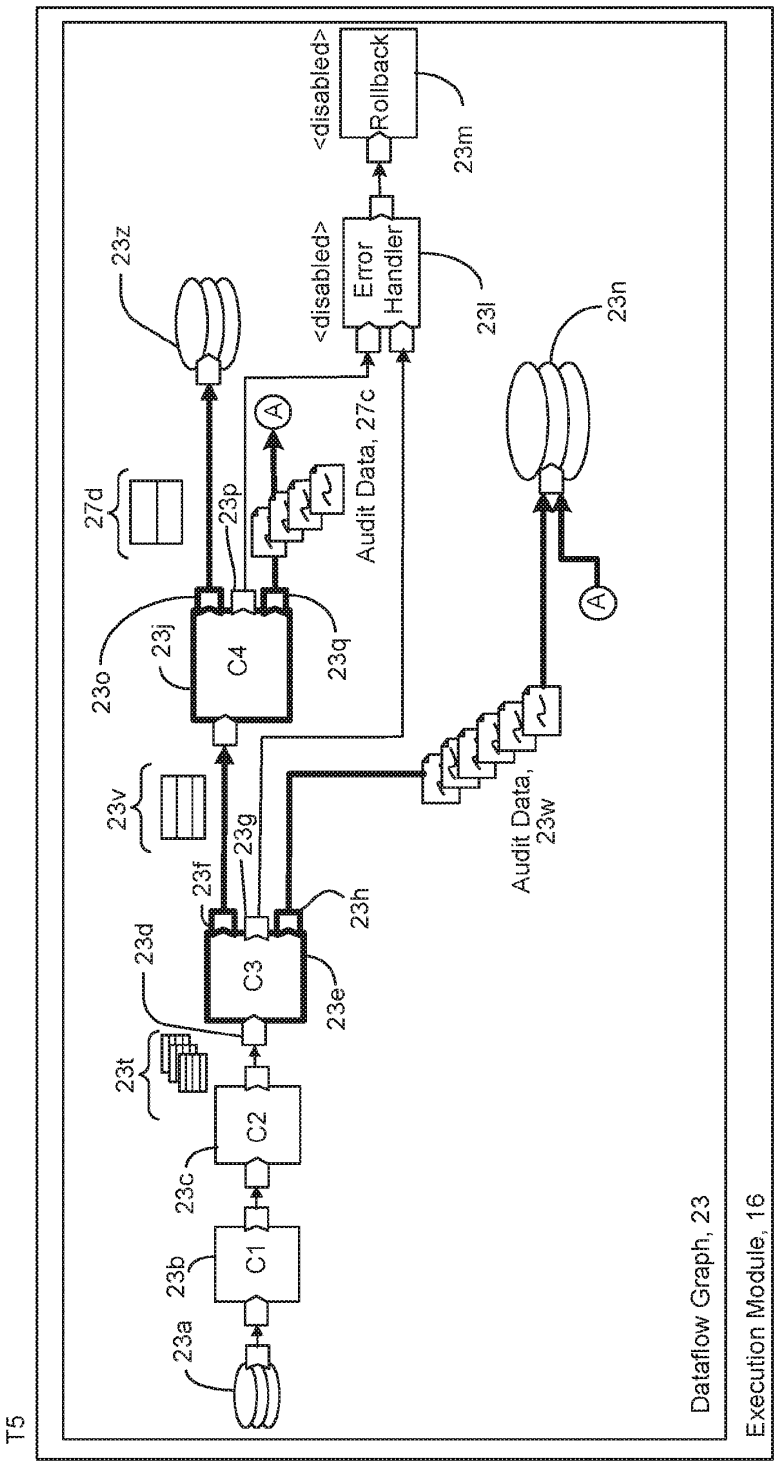
T5
Execution Module, 16
Dataflow Graph, 23
23a
23b
C1
23c
C2
23t
23d
C3
23e
23f
23g
23h
23v
23o
23j
C4
23q
23p
27d
23z
A
Audit Data, 27c
<disabled>
Error Handler
23l
<disabled>
Rollback
23m
Audit Data, 23w
23n
A

FIG. 2E

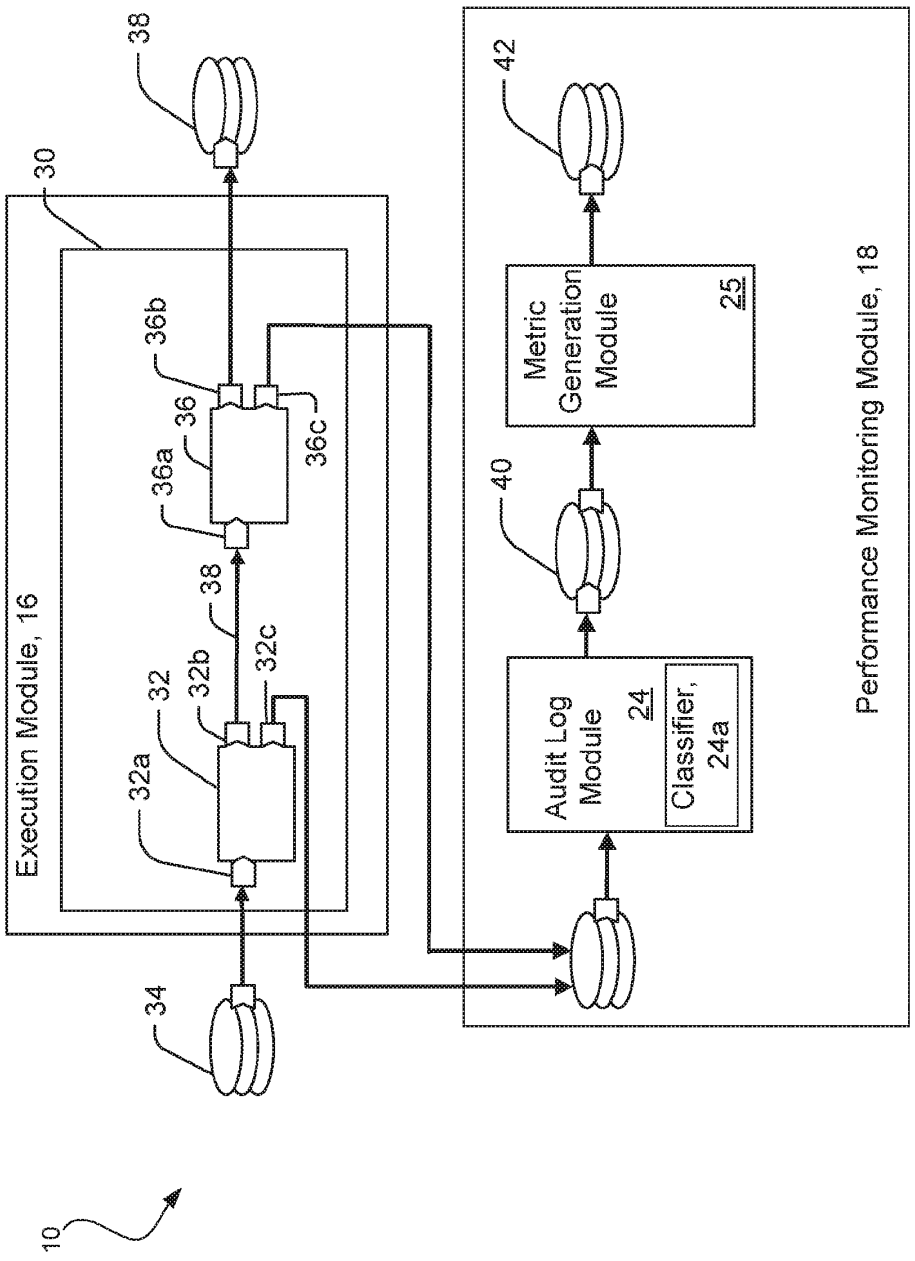
10
34
38
30
Execution Module, 16
32a
32
32b
38
32c
36a
36
36b
36c
38
42
Metric Generation Module
25
40
Audit Log Module
24
Classifier, 24a
Performance Monitoring Module, 18

FIG. 3A

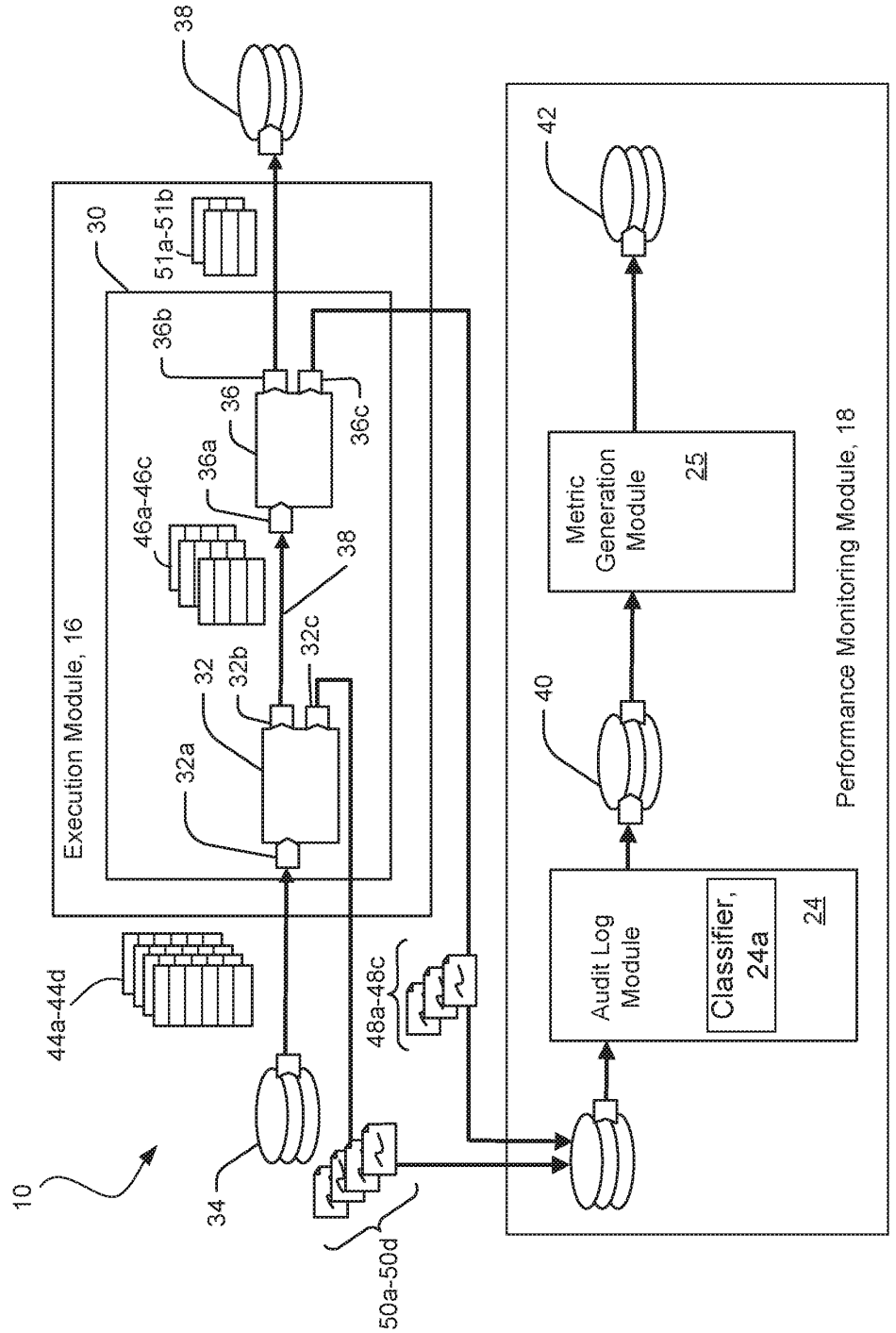
10
34
44a-44d
50a-50d
48a-48c
Execution Module, 16
30
32a
32
32b
32c
38
46a-46c
36a
36
36b
36c
51a-51b
38
Audit Log Module
Classifier, 24a
24
40
Metric Generation Module
25
42
Performance Monitoring Module, 18

FIG. 3B

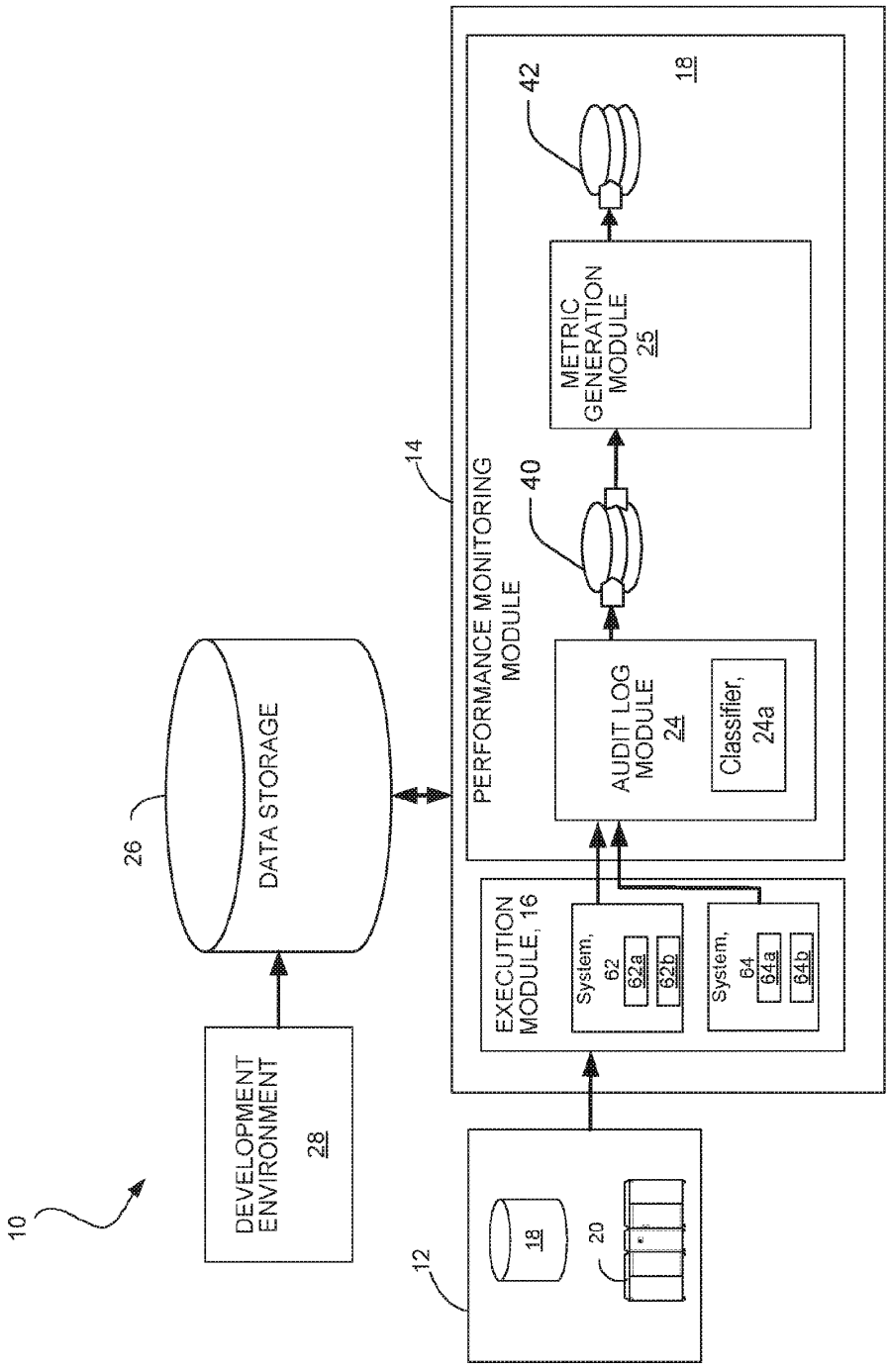
10
DEVELOPMENT ENVIRONMENT 28
26
DATA STORAGE
12
18
20
14
PERFORMANCE MONITORING MODULE
EXECUTION MODULE, 16
System, 62
62a
62b
System, 64
64a
64b
AUDIT LOG MODULE 24
Classifier, 24a
40
METRIC GENERATION MODULE 25
42
18

FIG. 4A

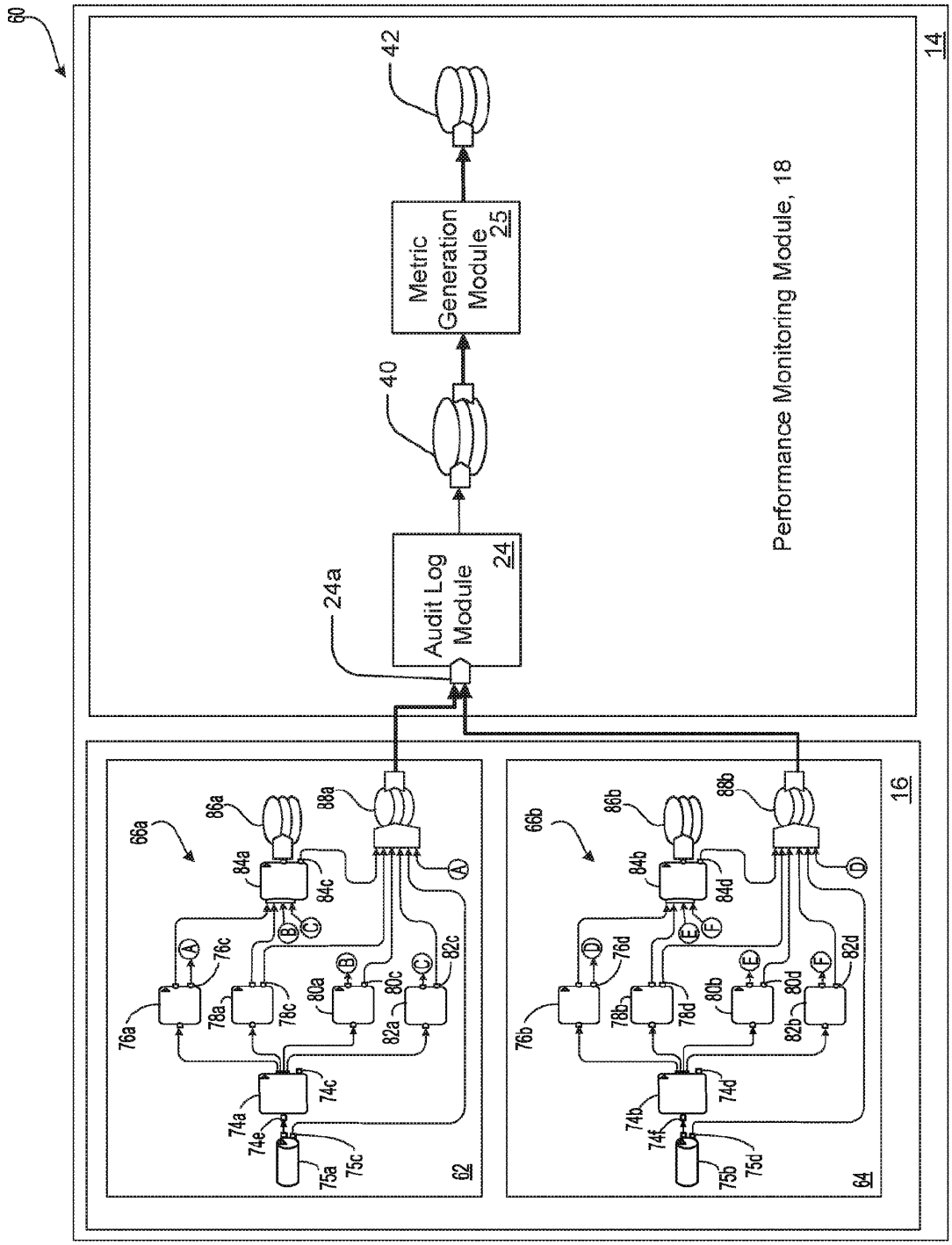
60
14
Performance Monitoring Module, 18
42
Metric Generation Module 25
40
Audit Log Module 24
24a
16
62
64
66a
66b
86a
88a
86b
88b
84a
84c
84b
84d
76a
76b
76c
76d
78a
78c
78b
78d
80a
80c
80b
80d
82a
82c
82b
82d
74a
74c
74b
74d
74e
74f
75a
75c
75b
75d

FIG. 4B

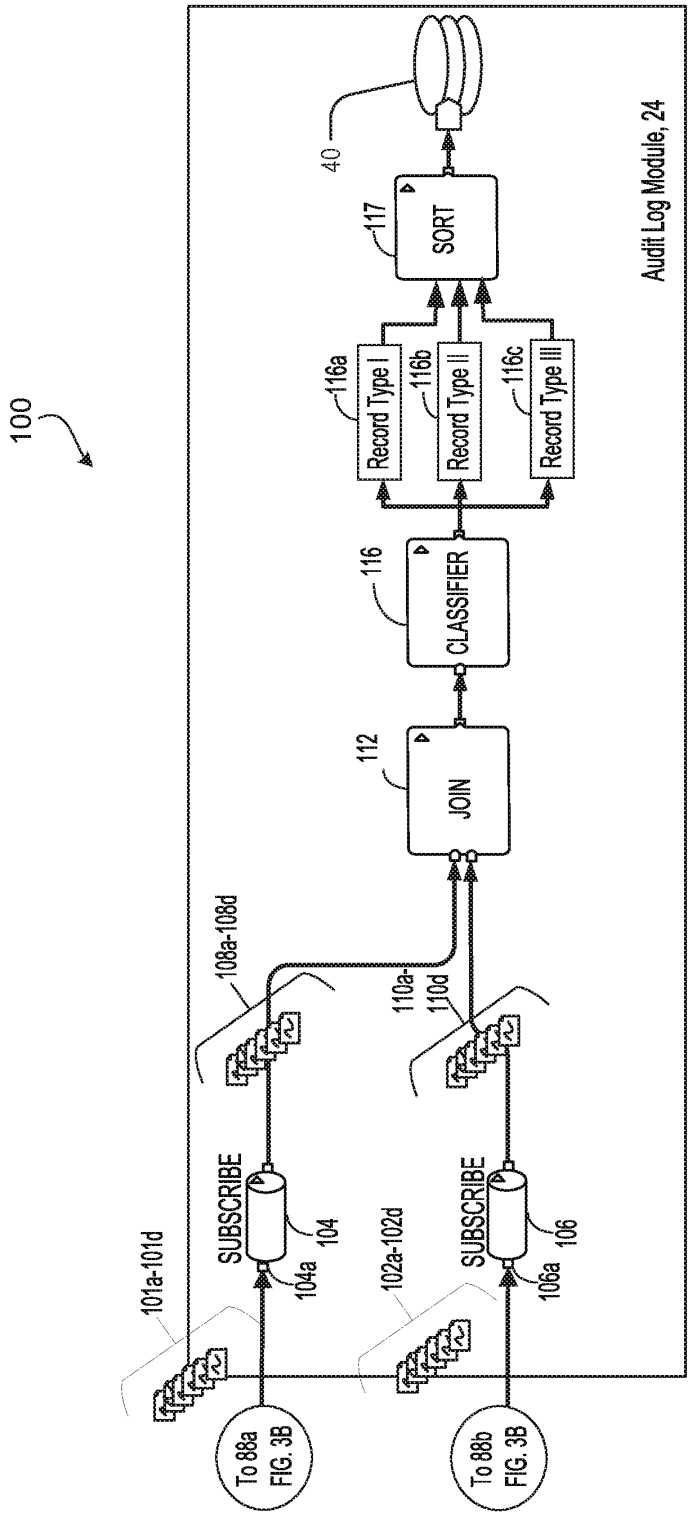
100
Audit Log Module, 24
40
117
SORT
116a
Record Type I
116b
Record Type II
116c
Record Type III
116
CLASSIFIER
112
JOIN
108a-108d
110a-110d
SUBSCRIBE
104
104a
SUBSCRIBE
106
106a
101a-101d
102a-102d
To 88a FIG. 3B
To 88b FIG. 3B

FIG. 4C

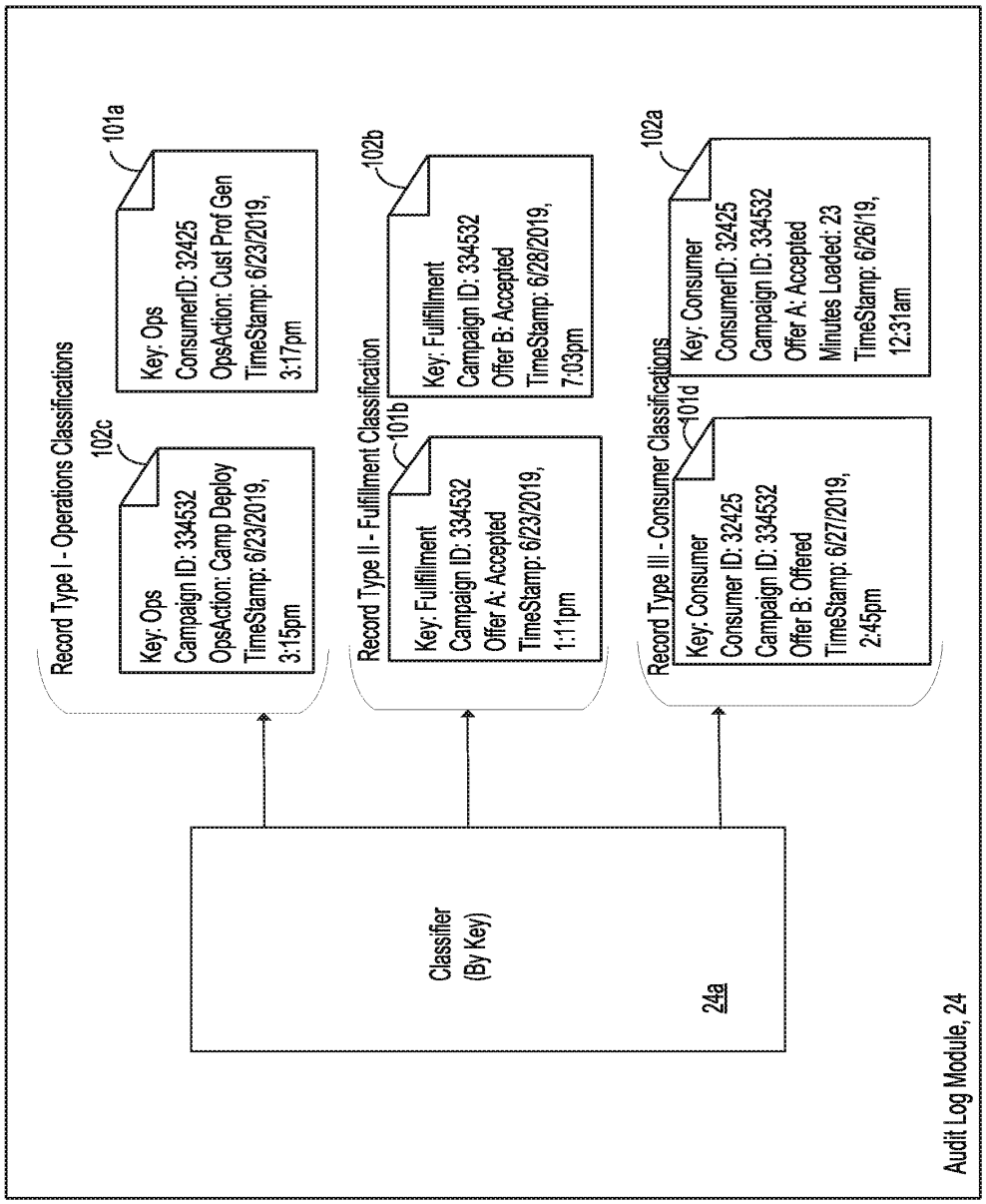
Audit Log Module, 24
Classifier
(By Key)
24a
Record Type I - Operations Classifications
102c
Key: Ops
Campaign ID: 334532
OpsAction: Camp Deploy
TimeStamp: 6/23/2019,
3:15pm
101a
Key: Ops
ConsumerID: 32425
OpsAction: Cust Prof Gen
TimeStamp: 6/23/2019,
3:17pm
Record Type II - Fulfillment Classification
101b
Key: Fulfillment
Campaign ID: 334532
Offer A: Accepted
TimeStamp: 6/23/2019,
1:11pm
102b
Key: Fulfillment
Campaign ID: 334532
Offer B: Accepted
TimeStamp: 6/28/2019,
7:03pm
Record Type III - Consumer Classifications
101d
Key: Consumer
Consumer ID: 32425
Campaign ID: 334532
Offer B: Offered
TimeStamp: 6/27/2019,
2:45pm
102a
Key: Consumer
ConsumerID: 32425
Campaign ID: 334532
Offer A: Accepted
Minutes Loaded: 23
TimeStamp: 6/26/19,
12:31am

FIG. 5A

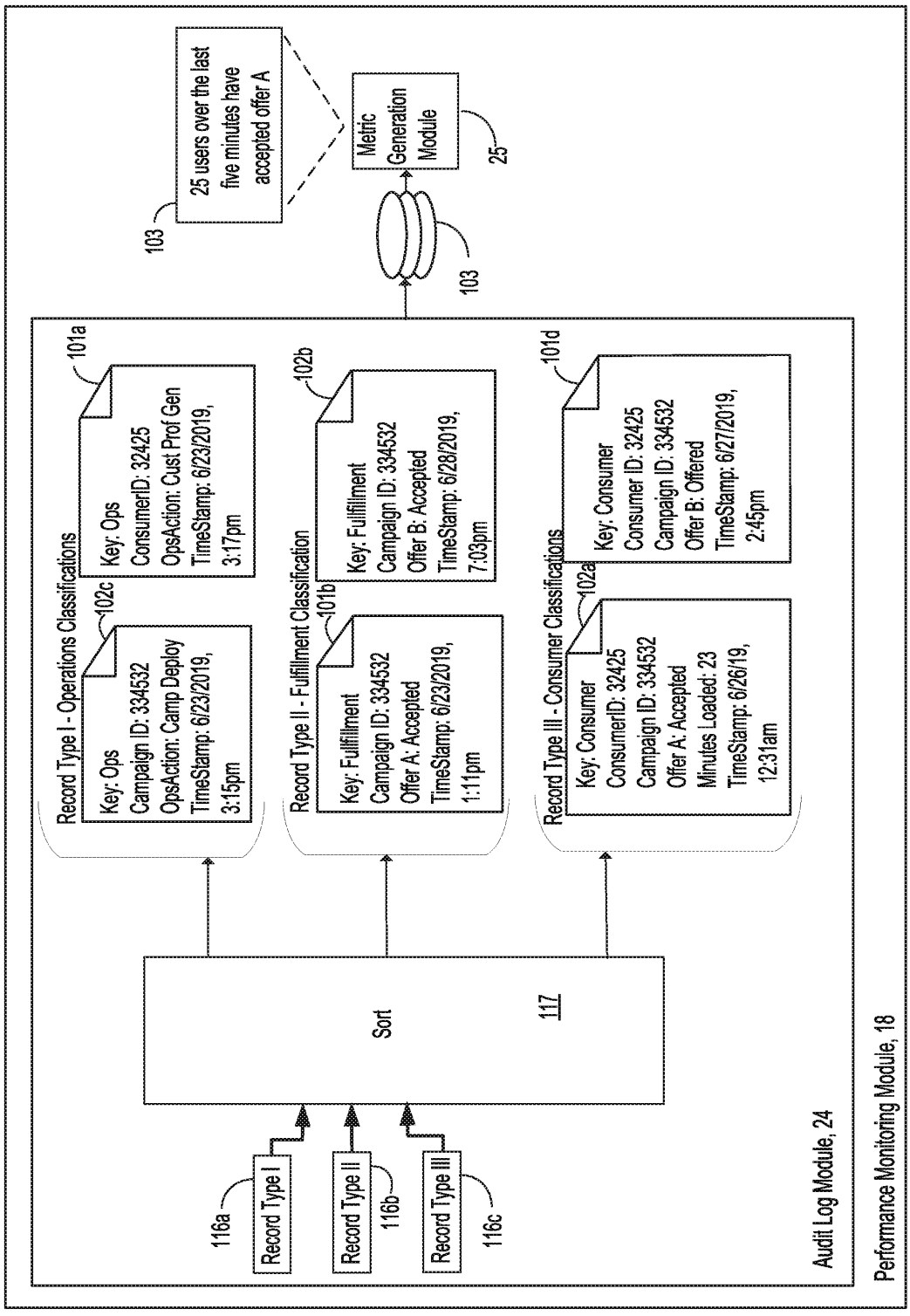
Performance Monitoring Module, 18
Audit Log Module, 24
116a
Record Type I
116b
Record Type II
116c
Record Type III
Sort
117
Record Type I - Operations Classifications
101a
Key: Ops
ConsumerID: 32425
OpsAction: Cust Prof Gen
TimeStamp: 6/23/2019,
3:17pm
102c
Key: Ops
Campaign ID: 334532
OpsAction: Camp Deploy
TimeStamp: 6/23/2019,
3:15pm
Record Type II - Fulfillment Classification
102b
Key: Fulfillment
Campaign ID: 334532
Offer B: Accepted
TimeStamp: 6/28/2019,
7:03pm
101b
Key: Fulfillment
Campaign ID: 334532
Offer A: Accepted
TimeStamp: 6/23/2019,
1:11pm
Record Type III - Consumer Classifications
101d
Key: Consumer
Consumer ID: 32425
Campaign ID: 334532
Offer B: Offered
TimeStamp: 6/27/2019,
2:45pm
102a
Key: Consumer
ConsumerID: 32425
Campaign ID: 334532
Offer A: Accepted
Minutes Loaded: 23
TimeStamp: 6/26/19,
12:31am
103
25 users over the last
five minutes have
accepted offer A
103
Metric
Generation
Module
25

FIG. 5B

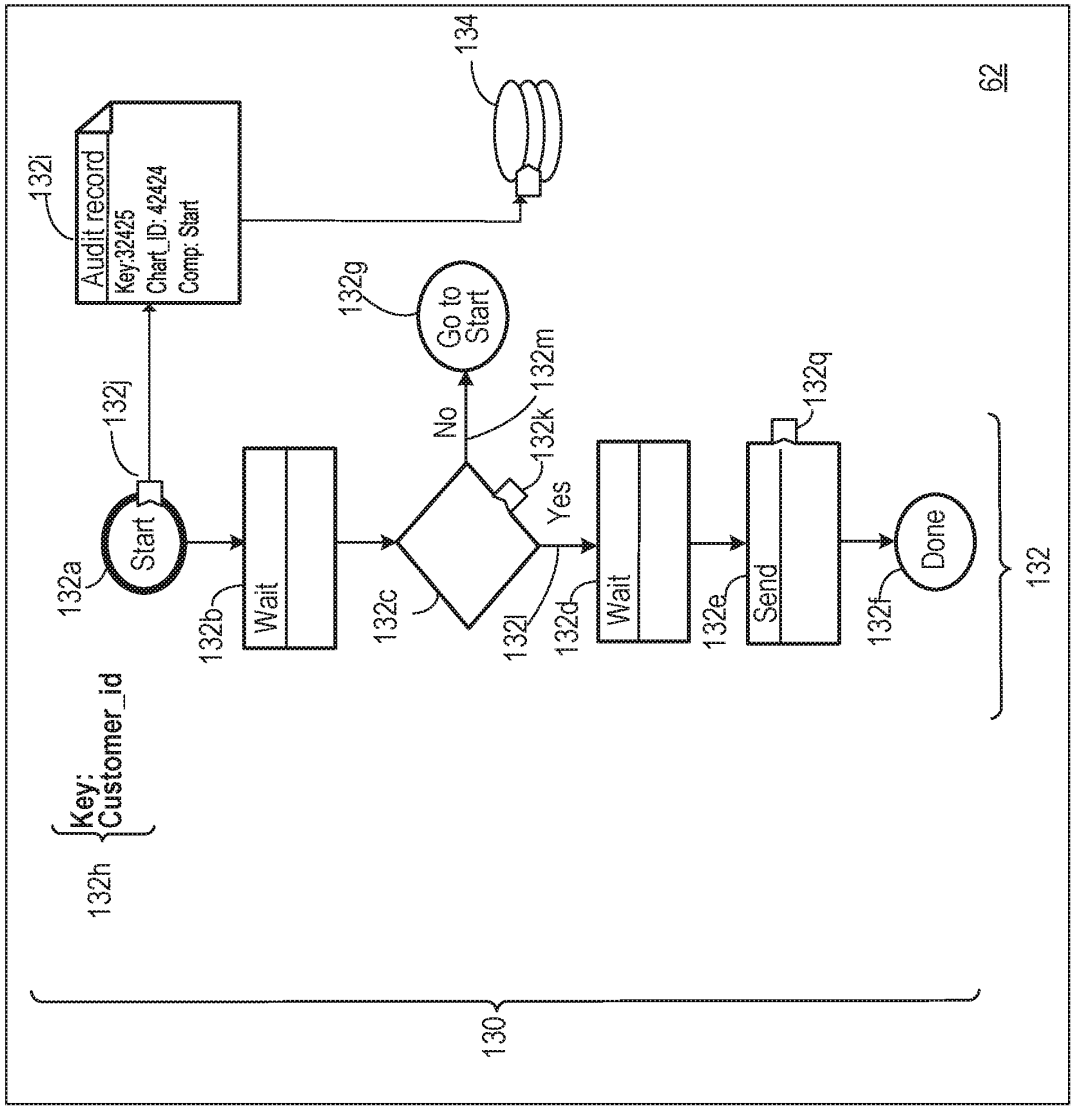
129a
62
134
132i
Audit record
Key:32425
Chart_ID: 42424
Comp: Start
132g
Go to Start
No
132m
132k
Yes
132j
132a
Start
132b
Wait
132c
132l
132d
Wait
132e
Send
132q
132f
Done
132
132h
Key:
Customer_id
130

FIG. 6A

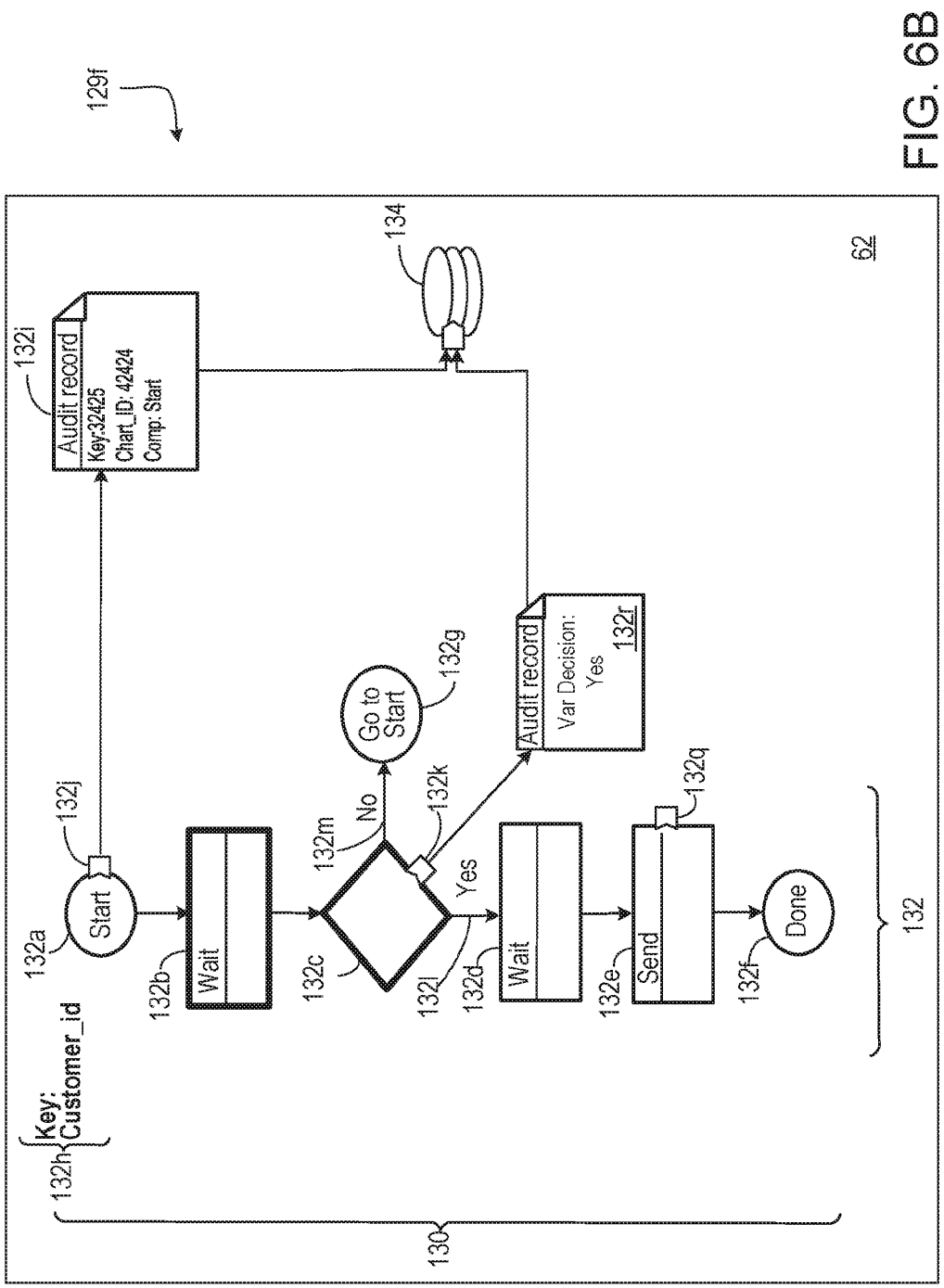
129f
62
134
132i
Audit record
Key:32425
Chart_ID: 42424
Comp: Start
132j
Start
132a
Key:
Customer_id
132h
Wait
132b
132c
132m
No
Go to
Start
132g
132k
Yes
132l
Audit record
Var Decision:
Yes
132r
Wait
132d
132q
Send
132e
Done
132f
132
130

FIG. 6B

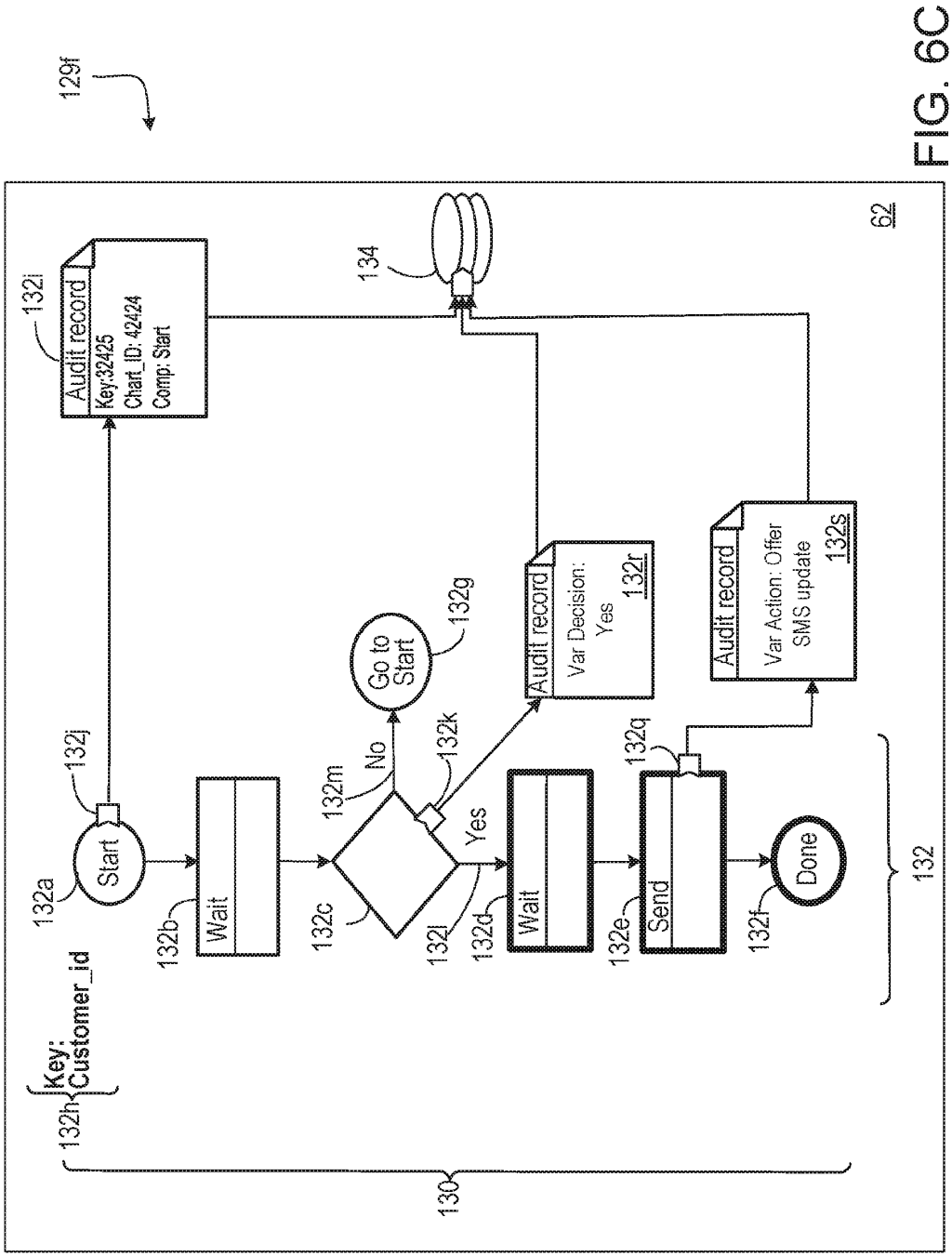
129f
62
132i
Audit record
Key:32425
Chart_ID: 42424
Comp: Start
134
132j
Start
132a
Wait
132b
132c
132m
No
Go to Start
132g
132k
Yes
132l
132d
Wait
Audit record
Var Decision: Yes
132r
132q
Send
132e
Done
132f
Audit record
Var Action: Offer SMS update
132s
132
Key: Customer_id
132h
130

FIG. 6C

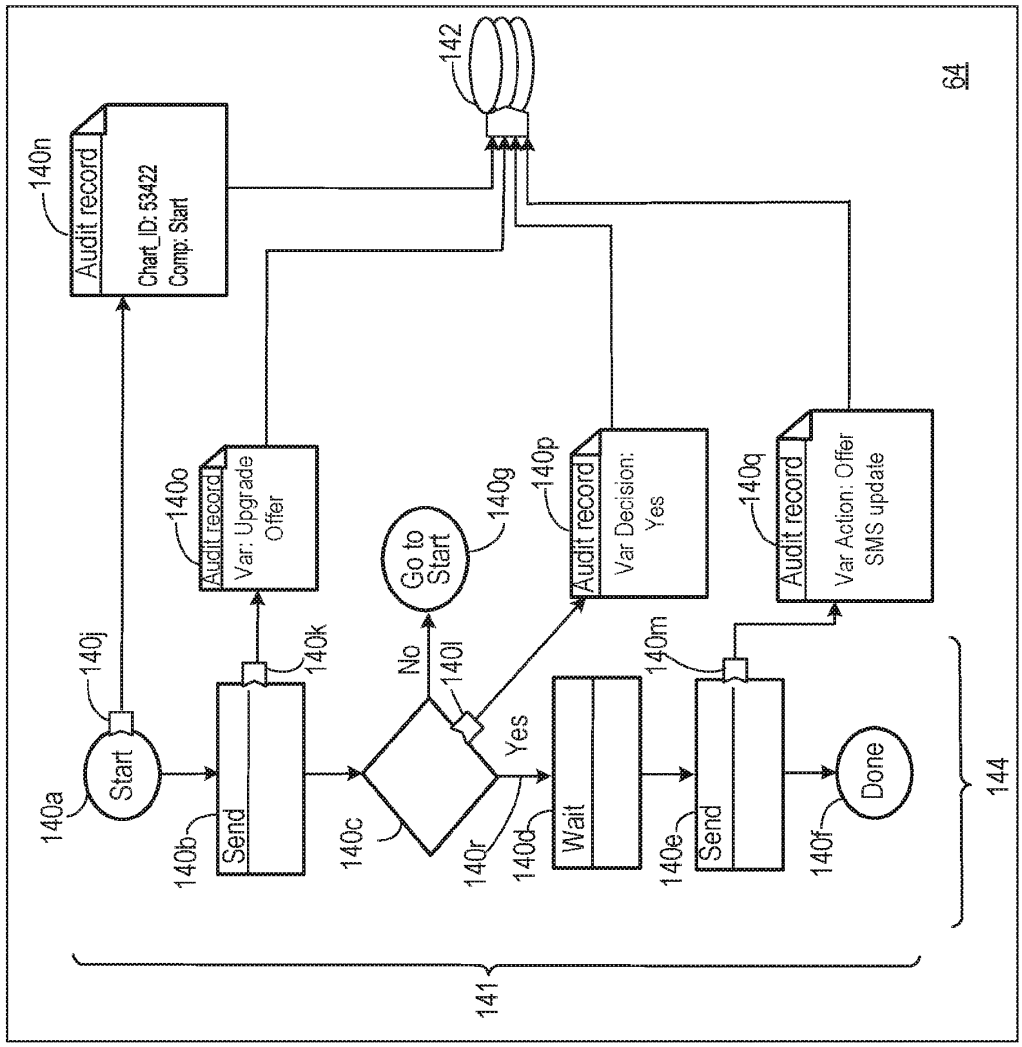
140
64
142
140n
Audit record
Chart_ID: 53422
Comp: Start
140o
Audit record
Var: Upgrade Offer
140p
Audit record
Var Decision: Yes
140q
Audit record
Var Action: Offer SMS update
140g
Go to Start
140j
Start
140a
140b
Send
140k
140c
No
140l
Yes
140r
140d
Wait
140m
140e
Send
140f
Done
141
144

FIG. 6D

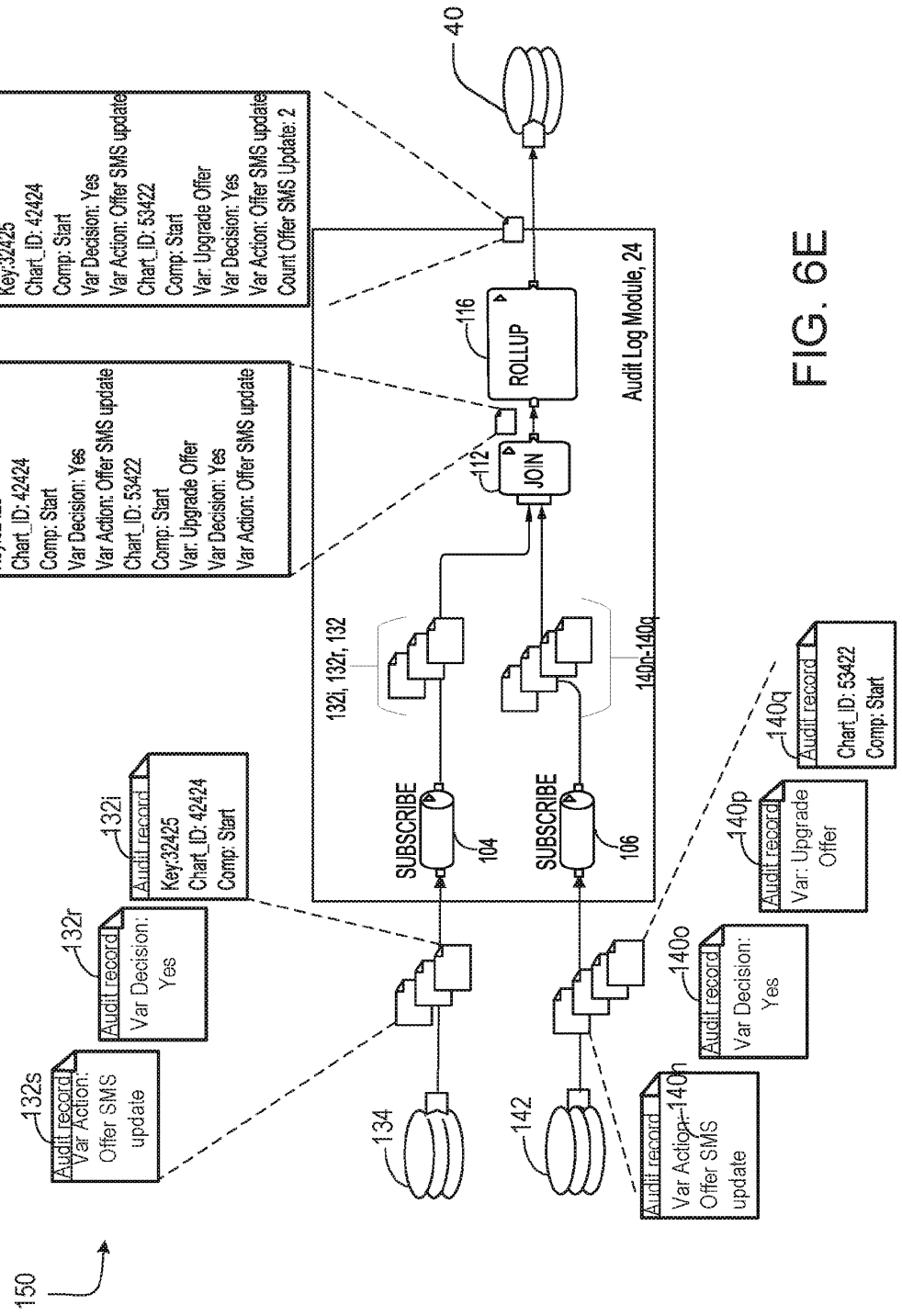
150
132s
Audit record
Var Action: Offer SMS update
132r
Audit record
Var Decision: Yes
132i
Audit record
Key:32425
Chart_ID: 42424
Comp: Start
152
Joined Record
Key:32425
Chart_ID: 42424
Comp: Start
Var Decision: Yes
Var Action: Offer SMS update
Chart_ID: 53422
Comp: Start
Var: Upgrade Offer
Var Decision: Yes
Var Action: Offer SMS update
154
Rolled-up Record
Key:32425
Chart_ID: 42424
Comp: Start
Var Decision: Yes
Var Action: Offer SMS update
Chart_ID: 53422
Comp: Start
Var: Upgrade Offer
Var Decision: Yes
Var Action: Offer SMS update
Count Offer SMS Update: 2
40
Audit Log Module, 24
116
ROLLUP
112
JOIN
132i, 132r, 132
140n-140q
SUBSCRIBE
104
SUBSCRIBE
106
134
142
140o
Audit record
Var Decision: Yes
140p
Audit record
Var: Upgrade Offer
140q
Audit record
Chart_ID: 53422
Comp: Start
140n
Audit record
Var Action: Offer SMS update

FIG. 6E

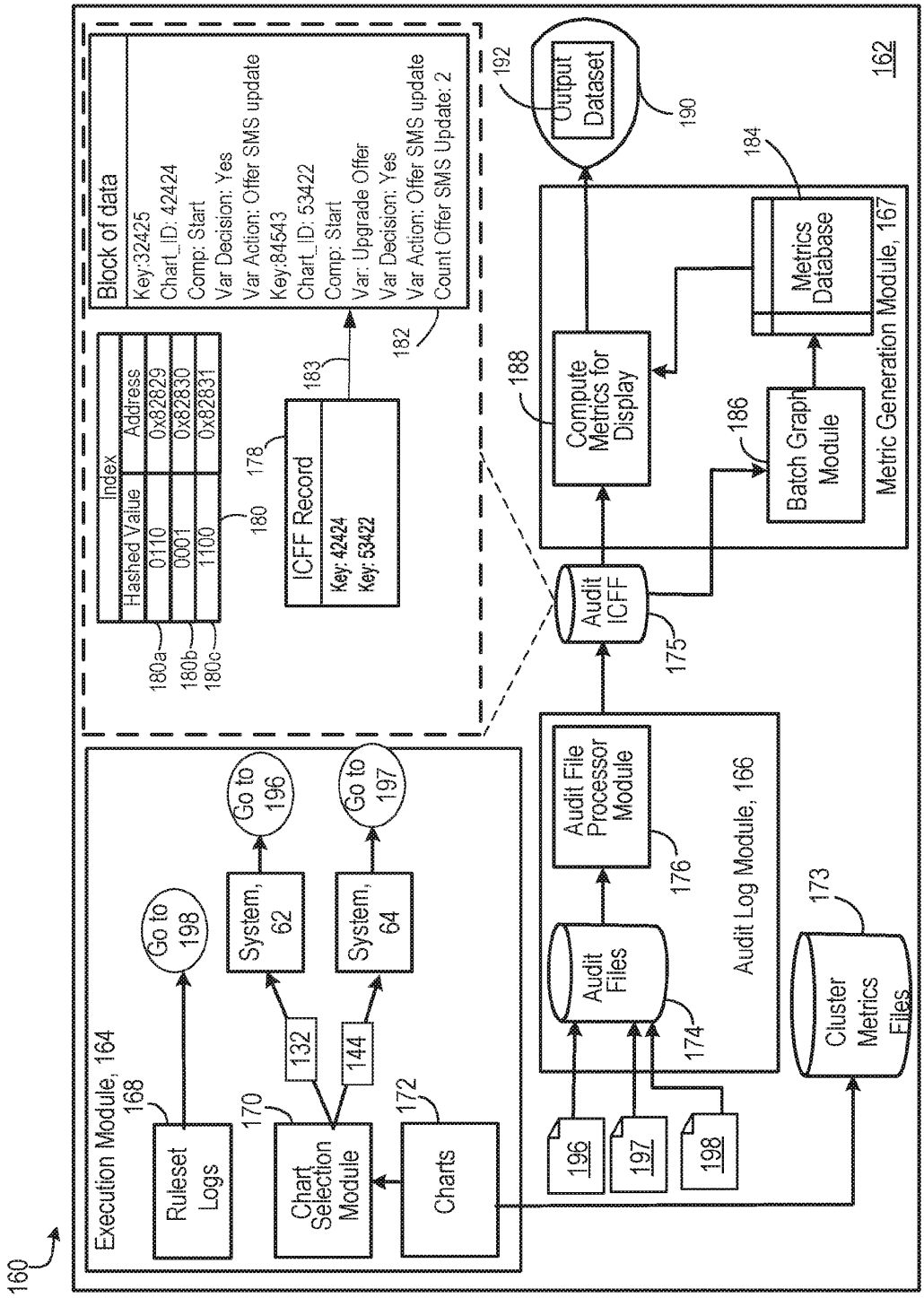
160
Execution Module, 164
168
Ruleset Logs
170
Chart Selection Module
172
Charts
132
144
System, 62
System, 64
Go to 196
Go to 197
Go to 198
Block of data
Key:32425
Chart_ID: 42424
Comp: Start
Var Decision: Yes
Var Action: Offer SMS update
Key:84543
Chart_ID: 53422
Comp: Start
Var: Upgrade Offer
Var Decision: Yes
Var Action: Offer SMS update
Count Offer SMS Update: 2
182
Index
Hashed Value
Address
0110
0x82829
0001
0x82830
1100
0x82831
180
180a
180b
180c
178
ICFF Record
Key: 42424
Key: 53422
183
Audit ICFF
175
188
Compute Metrics for Display
192
Output Dataset
190
Batch Graph Module
186
Metrics Database
184
Metric Generation Module, 167
162
Audit File Processor Module
176
Audit Log Module, 166
Audit Files
174
Cluster Metrics Files
173
196
197
198

FIG. 7

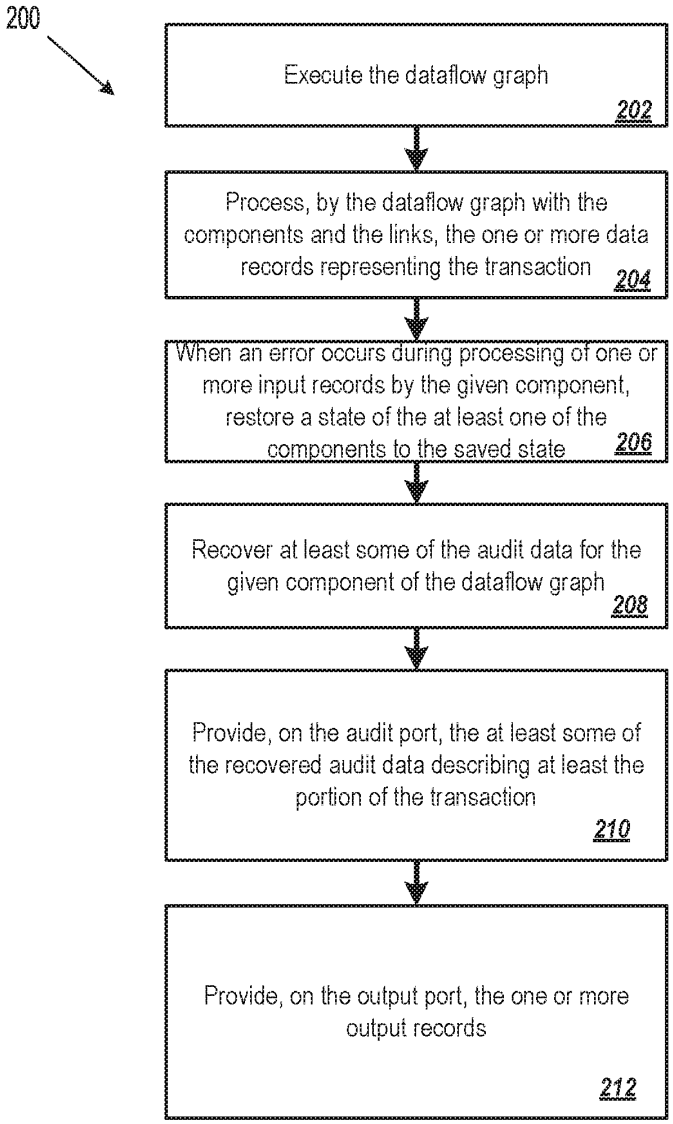
200
Execute the dataflow graph
202
Process, by the dataflow graph with the components and the links, the one or more data records representing the transaction
204
When an error occurs during processing of one or more input records by the given component, restore a state of the at least one of the components to the saved state
206
Recover at least some of the audit data for the given component of the dataflow graph
208
Provide, on the audit port, the at least some of the recovered audit data describing at least the portion of the transaction
210
Provide, on the output port, the one or more output records
212

FIG. 8