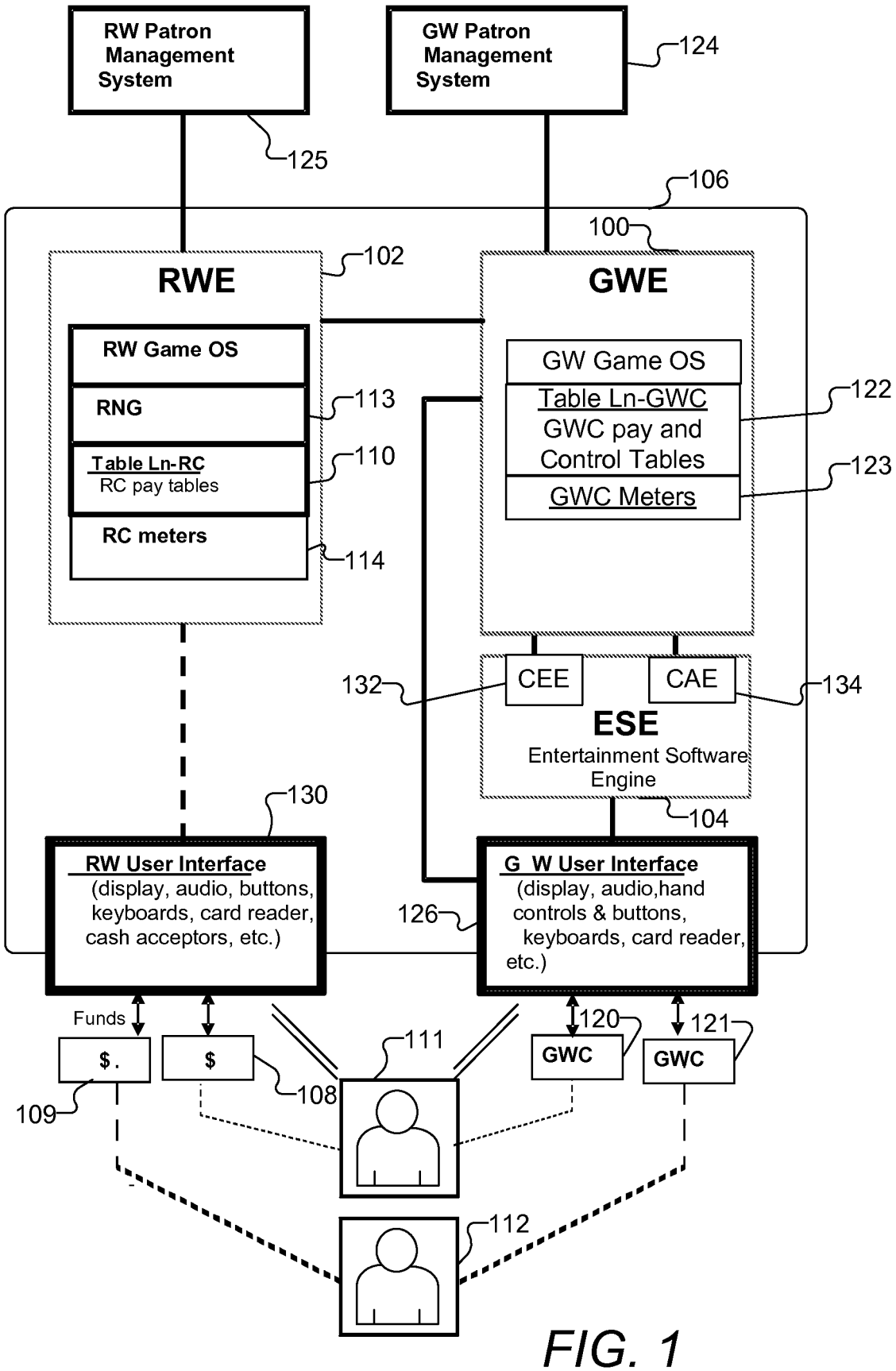
RW Patron Management System
GW Patron Management System
124
125
106
100
102
RWE
GWE
RW Game OS
RNG
Table Ln-RC
RC pay tables
RC meters
113
110
114
GW Game OS
Table Ln-GWC
GWC pay and Control Tables
GWC Meters
122
123
132
CEE
CAE
134
ESE
Entertainment Software Engine
104
130
RW User Interface
(display, audio, buttons, keyboards, card reader, cash acceptors, etc.)
126
G W User Interface
(display, audio,hand controls & buttons, keyboards, card reader, etc.)
Funds
$.
$
109
108
111
120
121
GWC
GWC
112

FIG. 1

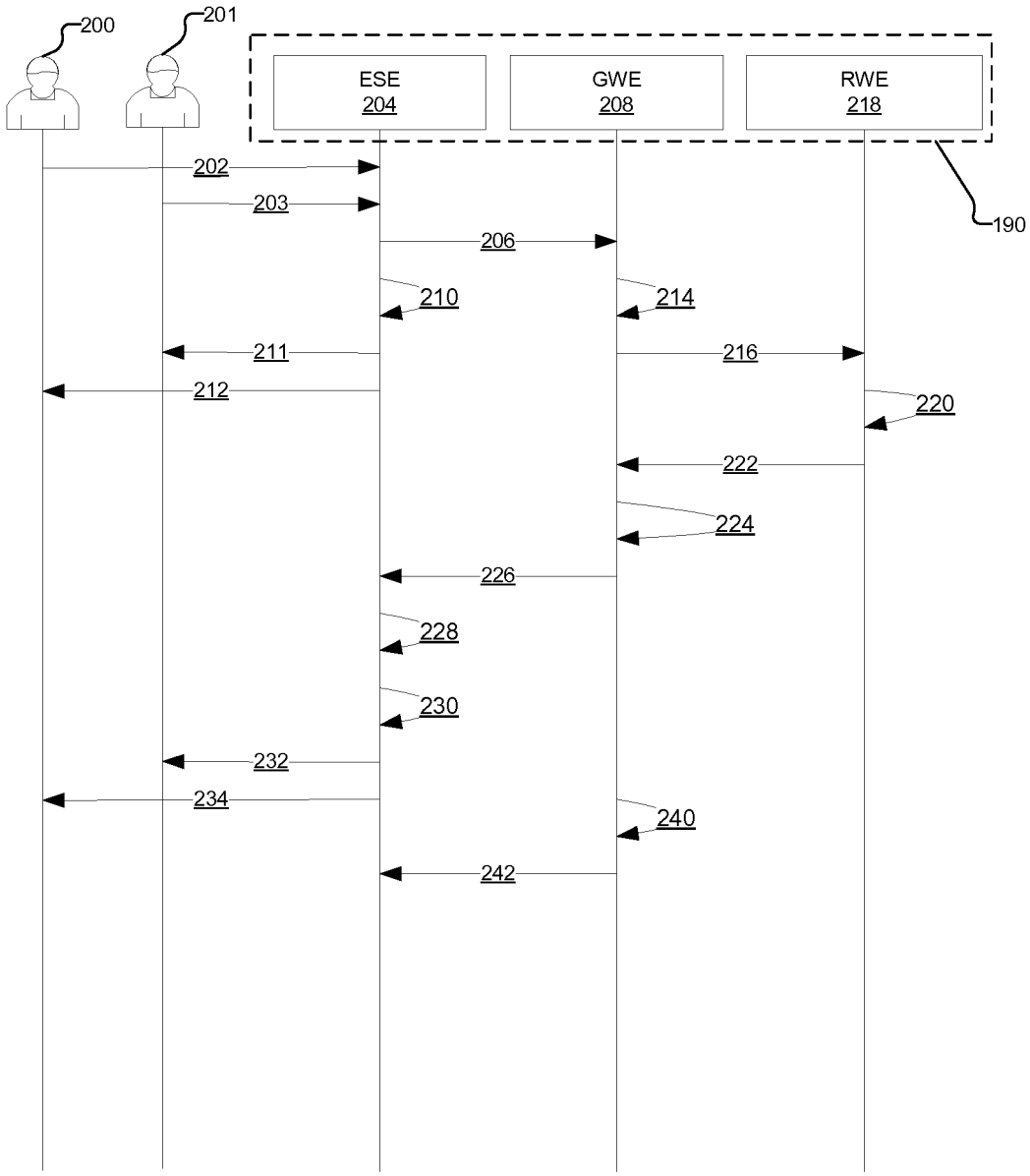
200
201
ESE
204
GWE
208
RWE
218
190
202
203
206
210
214
211
216
212
220
222
224
226
228
230
232
234
240
242

FIG. 2

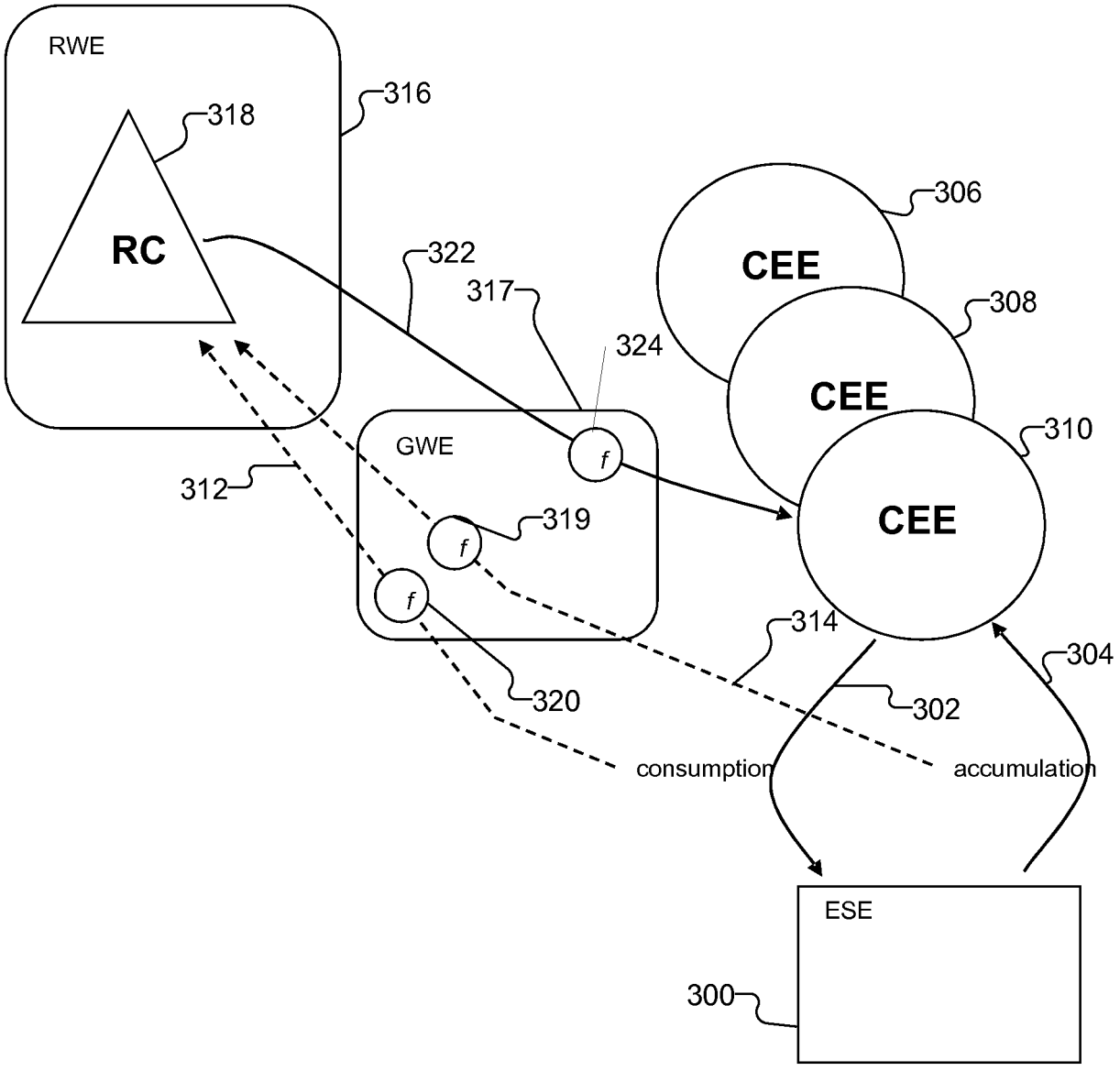
RWE
316
318
RC
322
317
324
306
CEE
308
CEE
310
CEE
GWE
312
319
320
314
304
302
consumption
accumulation
ESE
300

FIG. 3

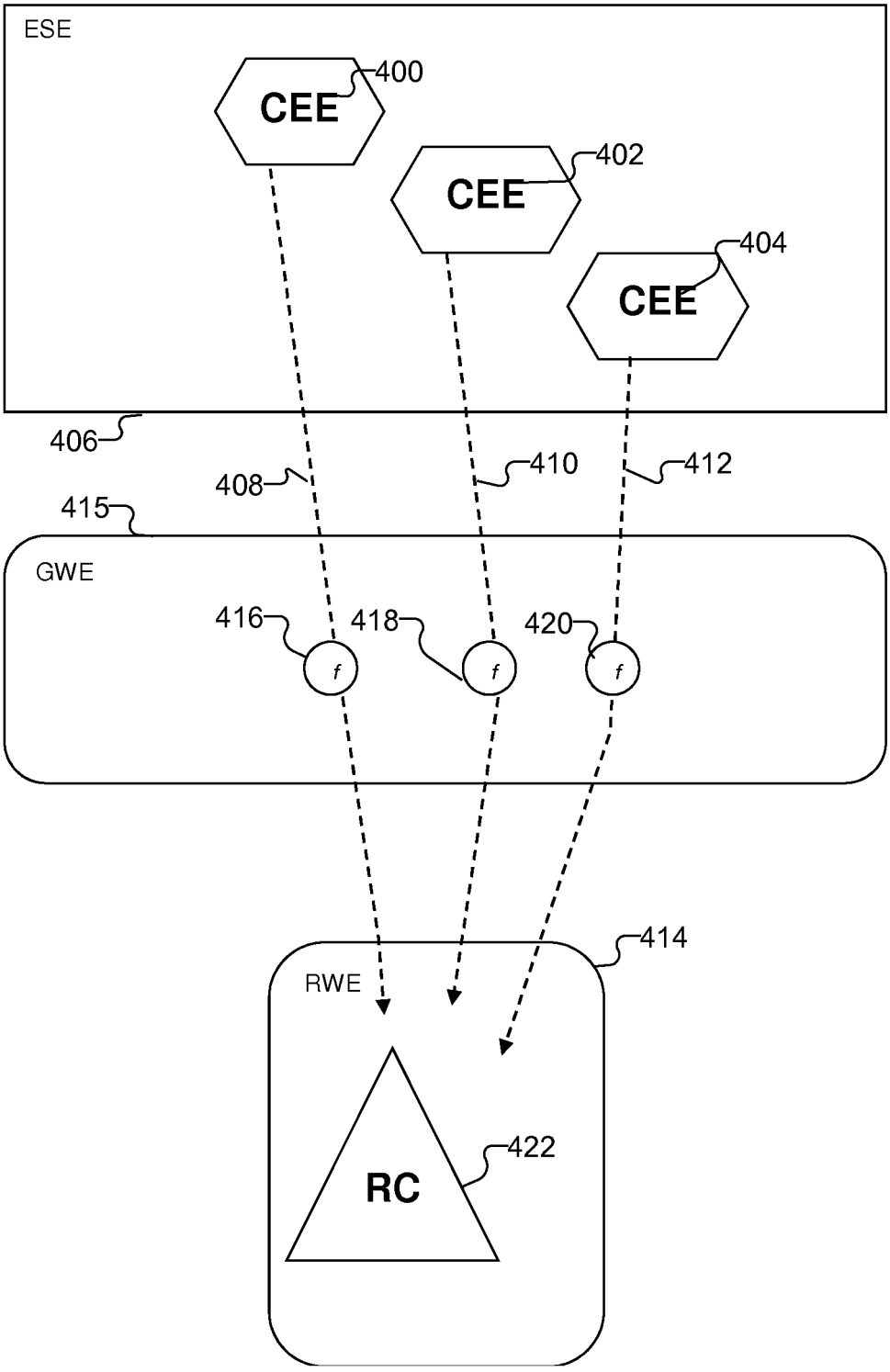
ESE
CEE
400
CEE
402
CEE
404
406
408
410
412
415
GWE
416
418
420
f
f
f
414
RWE
RC
422

FIG. 4

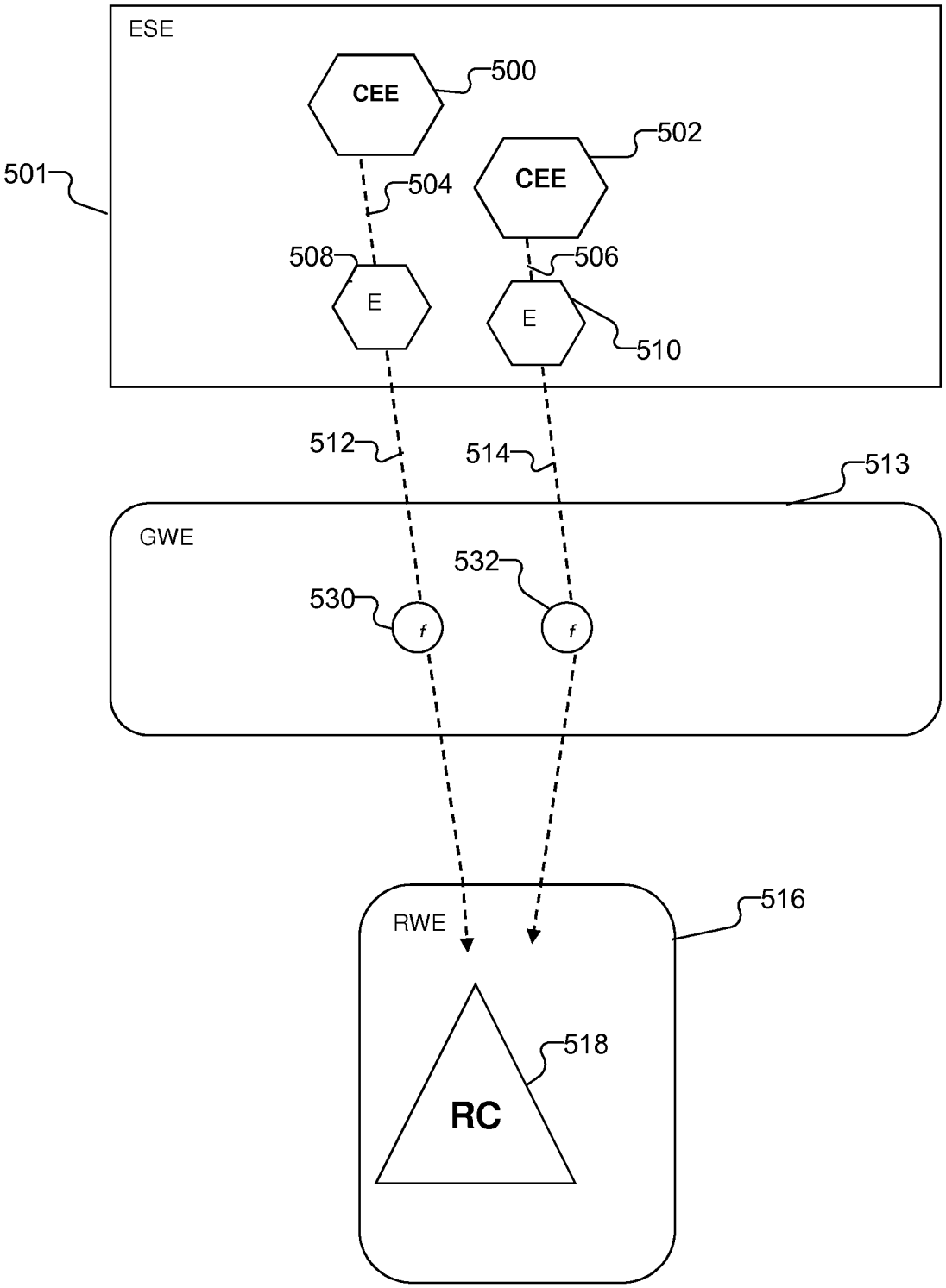
ESE
CEE
500
CEE
502
501
504
508
506
E
E
510
512
514
513
GWE
532
530
f
f
516
RWE
518
RC

FIG. 5

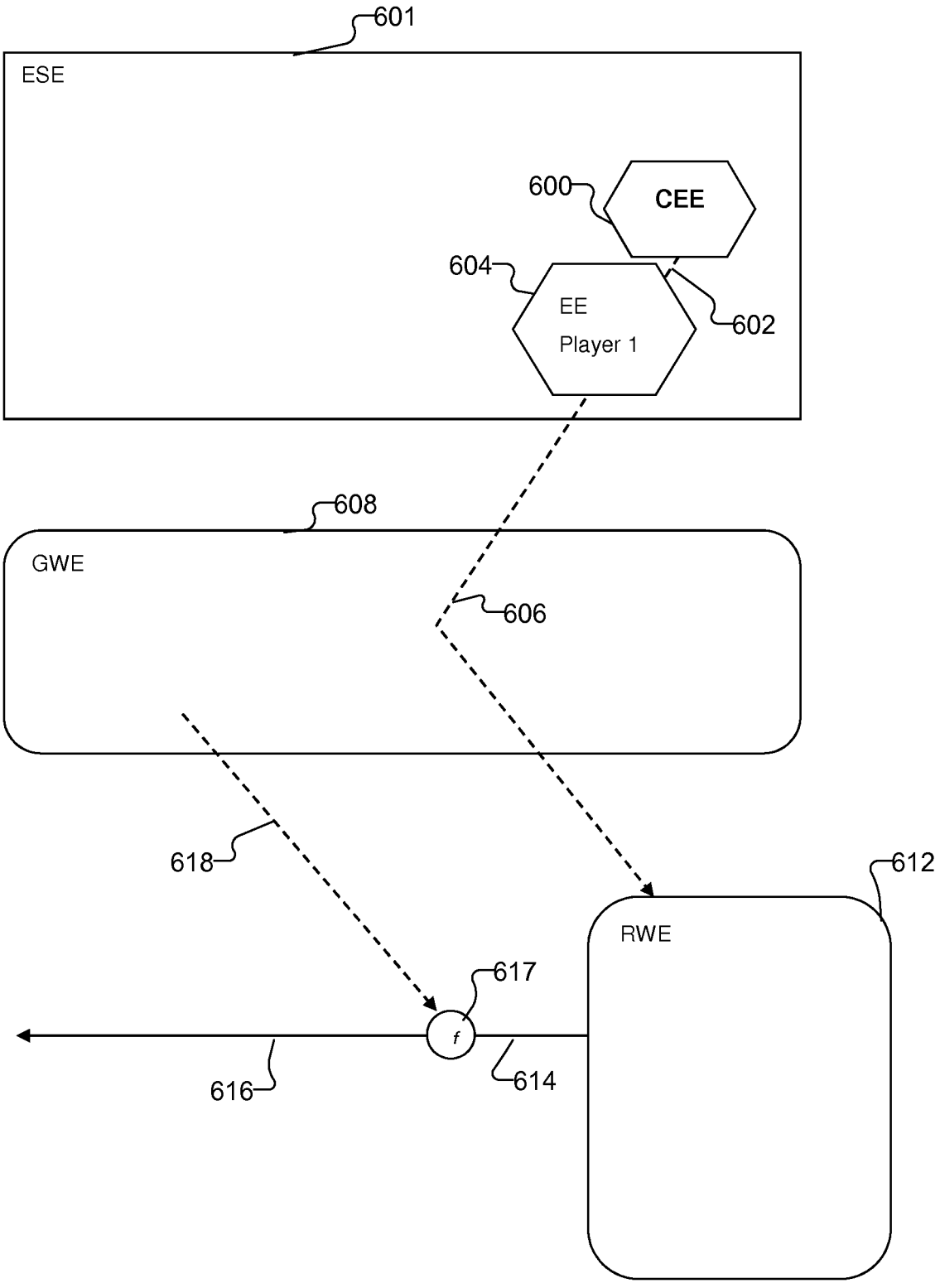
601
ESE
600
CEE
604
EE
Player 1
602
608
GWE
606
618
612
RWE
617
f
616
614

FIG. 6

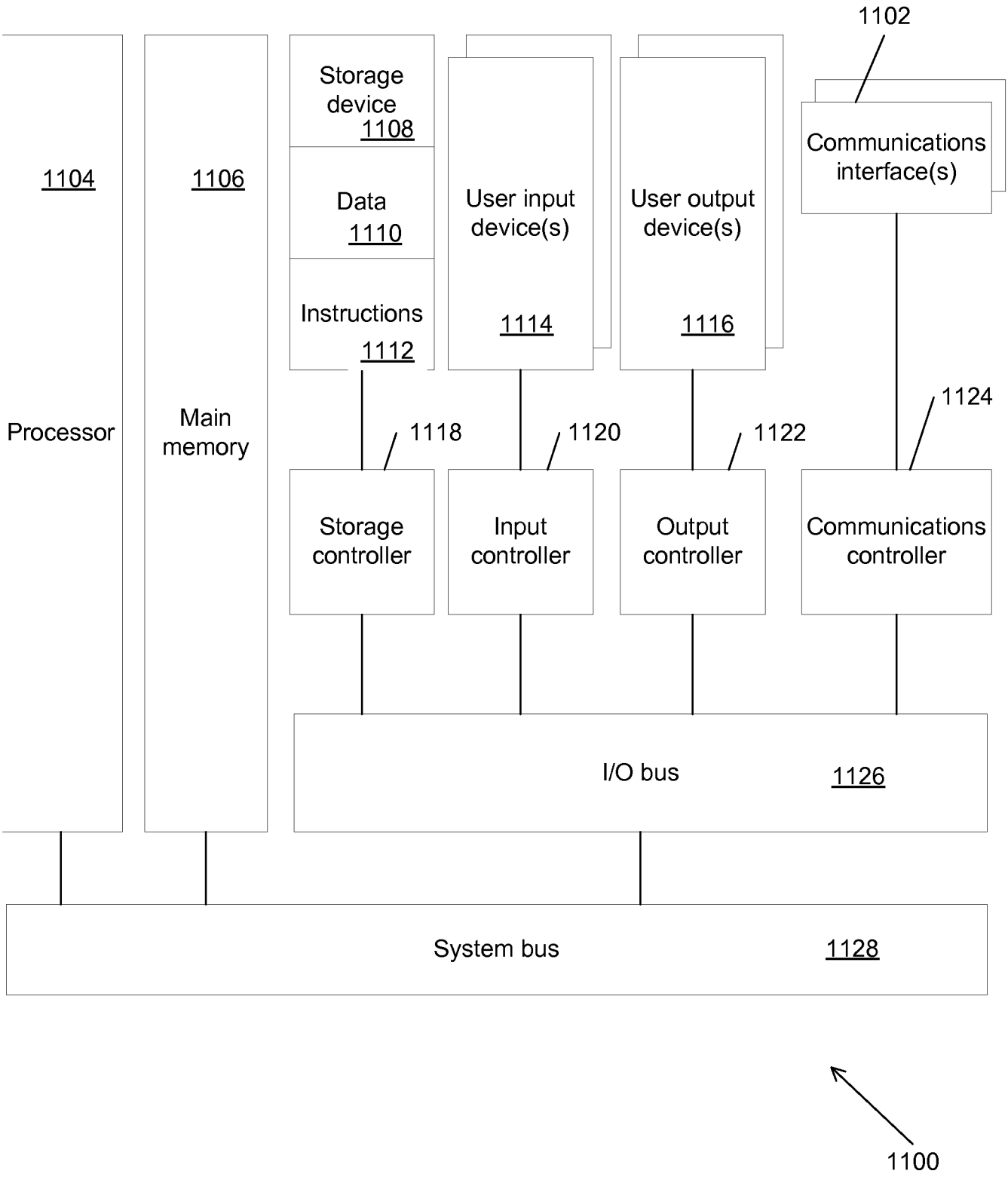
1102
Storage device 1108
Data 1110
Instructions 1112
User input device(s) 1114
User output device(s) 1116
Communications interface(s)
1104
1106
Processor
Main memory
1118
1120
1122
1124
Storage controller
Input controller
Output controller
Communications controller
I/O bus 1126
System bus 1128
1100

FIG. 7