(12) INTERNATIONAL APPLICATION PUBLISHED UNDER THE PATENT COOPERATION TREATY (PCT)

(19) World Intellectual Property Organization
International Bureau

(43) International Publication Date
16 June 2005 (16.06.2005)

PCT

(10) International Publication Number
WO 2005/054072 A1

(51) International Patent Classification[7]: B65D 45/20, 43/02

(21) International Application Number: PCT/GB2004/005103

(22) International Filing Date: 3 December 2004 (03.12.2004)

(25) Filing Language: English

(26) Publication Language: English

(30) Priority Data:

0328160.7	4 December 2003 (04.12.2003)	GB
0407375.5	31 March 2004 (31.03.2004)	GB

(71) Applicant *(for all designated States except US)*: **IMPERIAL CHEMICAL INDUSTRIES PLC** [GB/GB]; 20 Manchester Square, London W1U 3AN (GB).

(72) Inventors; and

(75) Inventors/Applicants *(for US only)*: **BOOTH, Peter** [GB/GB]; 2 Newbarn Cottages, Savernake, Marlborough, Wilts SN8 3AY (GB). **BUNCE, Martin, Christopher** [GB/GB]; The Pink House, Southcote Road, Pewsey, Wiltshire SN9 5JG (GB). **DAVIS, Wil, John** [GB/GB]; 36 Arundel Road, Camden, Bath BA1 6EF (GB). **FORDHAM, Carl, Edward** [GB/GB]; 2 Centaury Close, Colchester, Essex CO3 0SF (GB). **PEACOP, Alexander, James** [GB/GB]; 6 Bunnies Lane, Rowd, Devizes, Wiltshire SN10 2QB (GB).

(74) Agents: **JONES, Colin, D.** et al.; Withers & Rogers, Goldings House, 2 Hays Lane, London SE1 2HW (GB).

(81) Designated States *(unless otherwise indicated, for every kind of national protection available)*: AE, AG, AL, AM, AT, AU, AZ, BA, BB, BG, BR, BW, BY, BZ, CA, CH, CN, CO, CR, CU, CZ, DE, DK, DM, DZ, EC, EE, EG, ES, FI, GB, GD, GE, GH, GM, HR, HU, ID, IL, IN, IS, JP, KE, KG, KP, KR, KZ, LC, LK, LR, LS, LT, LU, LV, MA, MD, MG, MK, MN, MW, MX, MZ, NA, NI, NO, NZ, OM, PG, PH, PL, PT, RO, RU, SC, SD, SE, SG, SK, SL, SY, TJ, TM, TN, TR, TT, TZ, UA, UG, US, UZ, VC, VN, YU, ZA, ZM, ZW.

(84) Designated States *(unless otherwise indicated, for every kind of regional protection available)*: ARIPO (BW, GH, GM, KE, LS, MW, MZ, NA, SD, SL, SZ, TZ, UG, ZM, ZW), Eurasian (AM, AZ, BY, KG, KZ, MD, RU, TJ, TM), European (AT, BE, BG, CH, CY, CZ, DE, DK, EE, ES, FI, FR, GB, GR, HU, IE, IS, IT, LT, LU, MC, NL, PL, PT, RO, SE, SI, SK, TR), OAPI (BF, BJ, CF, CG, CI, CM, GA, GN, GQ, GW, ML, MR, NE, SN, TD, TG).

Published:
— *with international search report*
— *before the expiration of the time limit for amending the claims and to be republished in the event of receipt of amendments*

For two-letter codes and other abbreviations, refer to the "Guidance Notes on Codes and Abbreviations" appearing at the beginning of each regular issue of the PCT Gazette.

(54) Title: A CONTAINER ASSEMBLY

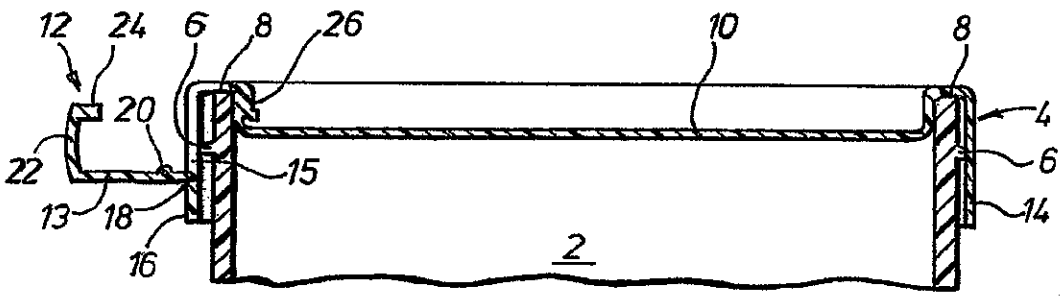

(57) Abstract: A container assembly comprising a container (2) and a cover (4), wherein the container has a peripheral wall defining a rim (8) enclosing an opening at one end thereof, and wherein the cover is provided for releasably closing the opening, the assembly being provided with at least one locking member (12) that is hingeable between an unlocked position and a locked position, the at least one locking member having a locking member engagement feature which engages with a corresponding engagement feature (20) on the cover and/or the container in the locked position to lock the cover to the container, in which the locking member passes over the rim of the container and/or a rim of the cover as the locking member hinges between the unlocked and locked positions such that the locking member locks onto the container rim.

WO 2005/054072 A1

A Container Assembly

This invention relates to a container assembly including a cover for releasably closing a container of the assembly. The cover is conveniently relockable. The invention finds particular, though not exclusive application to closing containers of liquids, for example paint.

Cans of paint, for example, are often simply closed with a lid that has an outwardly-directed rim that is press-fitted into the top of the container. Removal of the lid may be made by means of insertion of the blade of a screwdriver and twisting to prise off the lid. The lid can subsequently be replaced to re-close the container, but usually the mating surfaces of the lid and container become damaged, and can become coated with dried contents of the container, with the result that a significant effort has to be exerted to re-close the container, and even then a seal may not be effected, which can cause spillage and/or deterioration of the contents.

More complex closure arrangements are also known. WO 03/062081 A1 discloses a relockable closure for a container, comprising a cover and a skirt that is foldable to lock the cover onto the container. The closure requires a convoluted curl shape to be formed on the outside of the container at its rim. A metal cover for the container is provided with a separate peripheral skirt attached thereto that depends downwardly therefrom and has a fold point that allows a curved rib to be deployed downwards so as to engage beneath the curl of the container. A sealing compound is provided between the metal cover and the rim of the container. The skirt may be separated into a plurality of sections by slits to facilitate its folding down around the outside of the container so as releasably to lock the cover thereon. It will be appreciated that this closure requires several components and complex shaping in order to be effective.

US-A-3688942 discloses a simpler form of container and closure combination, in which the body of the container at its open end is shaped to provide a radially-outwardly and downwardly directed peripheral skirt portion. The closure is also provided with a peripheral skirt portion with a plurality of locking members attached thereto by integral flexible hinge walls. The locking member members engage the free edge of the container skirt portion in a cam and cam follower manner so as to

secure the closure to the container, with a compressible seal being provided therebetween.

Whilst each of WO 03/062081 A1 and US-A-3688942 provides a relockable closure for a container, release of the cover from the container is effected by a part thereof that extends beyond the periphery of the container, which can give rise to unintentional freeing of the closure and risk of spillage of the contents of the container.

US-A-1482931 discloses a covered receptacle in which a can has a rolled-over rim and is closed by a cover having an annular depending flange. A pair of spring-mounted levers are secured to the lower end of the flange diametrically opposite eachother, and are shaped to engage beneath the rim of the can to lock the cover thereon.

In accordance with a first aspect of the present invention there is provided a container assembly comprising a container and a cover, wherein the container has a peripheral wall defining a rim enclosing an opening at one end thereof, and wherein the cover is provided for releasably closing the opening, the assembly being provided with at least one locking member that is hingeable between an unlocked position and a locked position, the at least one locking member having a locking member engagement feature which engages with a corresponding engagement feature on the cover and/or the container in the locked position to lock the cover to the container, in which the locking member passes over the rim of the container and/or a rim of the cover as the locking member hinges between the unlocked and locked positions such that the locking member locks onto the container rim.

In accordance with a second aspect of the present invention, there is provided a closure arrangement for a container, wherein the container has a peripheral wall defining a rim enclosing an opening at one end thereof, and wherein a cover is provided for releasably closing the opening, the cover having a surface for extending over the opening with a periphery of the cover sitting on the rim of the container, and a skirt depending from the periphery to pass over the rim and to extend around the outside of the peripheral wall of the container, the arrangement comprising at least

one hinged locking member that passes over the rim of the container to lock the cover thereonto.

Advantageously, and in contrast to the prior art described above, hinging the locking member such that it passes over and locks onto the container rim, ensures the cover is locked onto the container with a greater degree of security, and is therefore less likely to be accidentally released.

The cover of the closure arrangement thus comprises (i) a surface that closes the opening of the container and preferably with a periphery sitting on, and advantageously sealing onto, the rim of the container, and (ii) a skirt depending from the closing surface.

Preferably, the or each hinged locking member is profiled so as to interengage with a complementarily-shaped profile on the container or on the cover so as to effect the locking of the cover onto the container. The profiling may comprise interengaging projections, or interengaging projections and recesses. The profiling may be provided on the inner and/or the outer surface of the container and/or the cover.

The hinging of the or each locking member may be located outside or inside the region defined by the peripheral wall of the container.

The or each locking member may be formed integrally with the cover or the container, being hinged thereto by a living hinge.

The hinging of the locking members, avoiding any permanent deformation thereof, permits repeated opening and reclosing of the container.

Preferably, the closing surface of the cover is arranged, at least upon closure of the locking member(s), to provide a seal onto the container.

Advantageously, the locking members are hinged so as to close upwardly over the rim of the container so as to dispose their free ends within the area defined by the rim, thereby to reduce the risk of unintentional release. To this end, the free ends of the

locking members may lie substantially flush with the upper surface of the cover, or at least be disposed below the level of the rim.

It is envisaged, however, that the locking members may be hinged within the periphery of the container rim so as to close downwardly around the outside of the container, preferably with their free ends lying closely adjacent thereto.

In accordance with a third aspect of the present invention, there is provided a closure arrangement for a container, wherein the container has a peripheral wall defining a rim enclosing an opening at one end thereof, the peripheral wall having at least one outwardly-directed projection extending at least partially around the outer surface of the wall adjacent the opening, and wherein a cover is provided for releasably closing the opening, the cover having a surface for closing the opening of the container and a skirt depending from the closing surface to enclose the projection of the container, the skirt being provided with at least one hinged locking member that has (a) an inwardly-directed projection for co-operating with the outwardly-directed projection of the container, and (b) a lip for passing over the rim of the container at the opening thereof and engaging onto the closing surface, thereby to lock the cover to the container, with the respective inwardly-and outwardly-directed projections engaging with each other.

Advantageously, the at least one projection of the container is longitudinally spaced apart from the rim thereof in a direction away from the container opening.

In accordance with a fourth aspect of the present invention, there is provided a container assembly comprising a container and a cover, wherein the container has a peripheral wall defining a rim enclosing an opening at one end thereof, and wherein the cover is provided for releasably closing the opening, the assembly being provided with at least one locking member that is hingeable between an unlocked position and a locked position, the at least one locking member having a locking member engagement feature which engages with a corresponding engagement feature on the cover and/or the container in the locked position to lock the cover to the container, in which the locking member hinges upwardly from the unlocked to the locked position

In contrast with US-A-1482931 referred to above, it will be appreciated that the closure arrangement of the present invention provides a positive engagement of the locking member(s) onto the cover thereof.

With locking of the container being brought about by an upward movement of the or each locking member to effect, preferably a snap-fit connection, there is less likelihood of the locking member being inadvertently moved to the unlocked position when a user picks up the paint container, since usually the user will pick up the container in an upwards movement which contrasts to the downwards movement required to unlock the locking member, and therefore release the cover from the container. If the snap-fit connection is over the rim of the container onto itself or onto the rim of the container, the free ends of the or each locking member may be safely and visibly contained within the periphery of the container, thus further mitigating against accidental release.

The closure arrangement of the present invention requires comparatively few components, comprising in its most basic form, a suitably-shaped rim of a container, and a cover that serves to close the container and to effect locking thereonto by one, or more, integral hinged locking members.

It is also pointed out that the locking members in their locked position are in a relaxed configuration rather than being held in tension. This avoids the potential problem of creep of the plastics material, whilst maintaining vertical pressure on the outwardly directed projection of the container.

It will be appreciated that the audible snap-fitting of the locking members will provide an indication to the user that they are securely in place.

The cover and the skirt are preferably formed integrally with one another, and the or each locking member is preferably formed integrally with the skirt, preferably being hinged thereto by a live hinge. Alternatively, the or each locking member may be secured to the skirt by a respective separate hinge.

Preferably, a window is formed in the skirt at the peripheral location of the or each locking member, whereby upon locking the cover onto the container, the locking member fits into its window and the respective inwardly- and outwardly-directed projections engage each other directly.

Since the cover and the container, in the absence of any liner, will be in contact with the contents of the container, they will be made from a relatively inert material. For example, they may be made of a plastics material, preferably by moulding. These parts may be made by a comparatively inexpensive blow moulding process using polyethyleneteraphthalate, for example. However, it is also envisaged that metal may be used in appropriate circumstances.

The or each locking member may be recessed into an otherwise substantially planar top surface of the cover, to provide further protection against accidental release of the closure arrangement from the container.

Preferably three locking members are provided for a closure arrangement of generally circular configuration, being equi-spaced around the cover, although two, or four or more, may be used if required. Where the configuration is rectilinear, then it is envisaged that at least one locking member would be provided for each side of the arrangement , or alternatively, a locking member may be provided at each corner of the container.

Whilst preferably the outwardly-directed projection on the surface of the container extends continuously therearound, thus allowing the cover to be fitted thereto in any orientation, it is envisaged that it may be provided by a plurality of discrete sections. In the latter case, the number of sections would advantageously be the same as the number of locking members, thus requiring the cover to be appropriately positioned on the container in order to effect locking therebetween.

Advantageously, the exterior of the base of the container is provided with one or more recesses to facilitate gripping thereof by a user.

It should be noted that protection is also sought for the cover and those features described in relation to the cover, independently of the container onto the which the cover is to be used.

A container assembly will now be described, by way of example, with reference to the accompanying drawings, in which:

Figure 1 is a plan view of the assembly with two locking members thereof in the locked position and a third locking member in the unlocked position,

Figure 2 is a sectional elevation on the line A-A of Figure 1 showing the cover in the unlocked position,

Figure 3 is a sectional elevation on the line B-B of Figure 1, showing the cover in the locked position,

Figure 3A is a sectional elevation on the line B-B of Figure 1, showing the cover in the locked and unlocked position,

Figure 4 is a plan view of the top of another embodiment of the container assembly,

Figure 5 is a sectional elevation on the line C-C of Figure 4, showing the assembly in the locked position,

Figures 6 to 15 are sectional elevations of alternative embodiments showing the container assembly in the locked and unlocked positions, and

Figure 16 is an underneath view of a container of the container assemblies of figures 1 to 15.

Referring to the Figures, a cylindrical container 2, made of a plastics material for containing paint, is closed by a moulded plastics cover 4. The container 2 has a projection 6 extending circumferentially therearound on its outer surface, adjacent a rim 8 at its open end.

The cover 4 has a planar dished upper surface 10 that sits within the container rim 8, and has three hinged locking members 12 equi-spaced therearound which are set into a downwardly depending skirt 14 of the cover 4. The cylindrical inner surface of the skirt 14 is of such a diameter as to form a sliding fit over the circumferential projection 6 on the outside of the container 2.

Each locking member 12 is formed integrally with the skirt 14 and can be hinged away from the lower circumferential edge 16 thereof by means of a live hinge 18 (Figure 2) exposing a window 15 in the skirt 14. The hinged portion of the locking member 12 is of generally L-shape, having a lower part 13 extending away from the hinge 18 that is provided adjacent thereto with an inwardly-directed projection 20, of generally the same size and shape as the container projection 6. The projections 6 and 20 are longitudinally displaced from the upper ends of the container 2 and cover 4 respectively, such that when the locking member 12 is moved from its unlocked position (Figure 2) to its locked position (Figure 3), the locking projection 20 engages the outer wall of the container 2 immediately below its projection 6.

In the locked position, the upper part 22 of the locking member 12 passes over the container rim 8 with its free hooked end 24 snap-fitting over a locally-thickened wall portion 26 of the raised rim 27 of the cover 4. This engagement of the locking member 12 onto the upper rim of the cover 4, whilst simultaneously bringing the projections 6 and 20 into engagement, is effected as a snap action, thus providing an audible indication that the cover 4 has been properly secured onto the container 2. Thus, the locking member 12 is locked onto the rim 8 of the container, and therefore retained in the locked position by virtue of the snap-fit between the hooked end 24 and the thickened wall portion 26, and with the locking member in the locked position, the cover is retained on the container by virtue of the engagement between the projection 20 on the locking member 12 and the projection 6 on the container rim.

Figure 3A shows in more detail the interaction between the locking member 12 as it moves upwards from the unlocked position (shown dotted) to the locked position. It can seen from a comparison of the locked and unlocked positions that the locking member 12 passes over the rim 8 of the container and locks onto the rim of the

container 8 due to the engagement between the thickened wall portion 26 of the raised rim 27 of the cover and the hooked end 24 of the locking member 12. It should be noted that in this embodiment the raised rim 27 of the cover is between the container rim and the locking member 12, and that the locking member 12 locks onto the container rim indirectly by locking onto the raised rim 27 which then locks onto the container rim 8. By locking the locking member onto the container rim in this way, the cover is retained with a greater degree of security onto the container.

It will be appreciated, that, in the locked configuration, upward pressure on the free ends 24 of the locking members 12, will force the hinges 18 open so that the cover 4 can be removed from the container 2. Sealing and opening of the container 2 can be effected repeatedly.

It will also be noted, that the hinging of the locking members 12 on the cover skirt 14 is on the outside of the container 2, and thus is not, in normal use, contacted by the container contents. Thus there is no interference of the locking members 12 by the contents of the container 2.

Figure 4 shows a top plan view and figure 5 shows a sectional elevation along line C-C of a modification of the assembly of Figures 1 to 3A. A circular cover 30 for the container (not shown) has three hinged locking members 32 equi-spaced therearound, shown in the locked position. However, in contrast to the previously discussed embodiment, the central cover surface 34 is not dished, but is substantially flush with the upper surface 33 of the locking members 32. The surface 34 is, however, provided with a scalloped region 36 adjacent each locking member 32, with the locking member 32 extending partially over the scalloped region 36 so as to facilitate lifting thereof for hinging the locking member 32 towards the unlocked position such that the cover 30 can be removed from the container. The planar top to the cover, with the recessing of the locking members, further mitigates against accidental opening of the container. The cover is retained on the container in the same manner as described in relation to the assembly of figures 1 to 3A.

With reference to figure 6 there is shown an alternative assembly which is identical to the assembly of figures 1 to 5 except that the container rim 227 is not locally

thickened. The cover is retained on the container in the same manner as described in relation to the assemblies of figures 1 to 5 except that the locking member 232 is locked onto the container by engagement of the locking member projection 224 with the inside surface 235 of the container rim 227.

With reference to figure 7, there is shown an alternative assembly which is identical to, and operates in the same way as the assembly of figure 6 except that in this embodiment the live hinge 318 is positioned at a lower edge of the skirt 314 as opposed to being spaced from the lower edge. By hinging the locking member about the lower edge of the skirt, as opposed to spaced above the skirt, a greater moment is generated about the hinge to retain the locking member in the locked position.

With reference to figure 8 there is shown an alternative assembly, which is identical to, and operates in the same way as the embodiment of figure 7 except that the cover rim inside surface 435 and the locking member projection 424 are profiled such that the projection 424 snaps into a recess 436 defined by the cover rim inside surface 435. This arrangement provides a more pronounced snap-fit, and thus a greater force is required to disengage the locking member projection 424 from the container rim recess 436 when moving the locking member 432 from the locked position to the unlocked position in comparison to the embodiments of figures 1 to 7. Thus, the cover is secured to the container with a greater degree of security.

With reference to figure 9 there is shown an alternative assembly which is identical to the embodiment of figure 8 except that firstly, the recess 536 is defined in the container rim and not in the cover rim, and secondly, no projections are provided on the skirt and on the outside of the container rim. The locking member projection 524 snaps into the recess 536 to retain the locking member 532 in the locked position. Thus it can be seen from the assembly of figure 9 that the cover is locked to the container by direct engagement of the locking member 532 onto the container as opposed to the cover. This is advantageous if the container is made of a material which is more rigid than the cover. To enable the locking member to engage directly onto the container rim, the cover rim 527 is modified such that it does not extend upwards greater than the projection 524 extends downwards.

It can also be seen that the engagement between the projection 524 and the recess 536 prevents the cover from being removed from the container when the locking member 532 is the locked position. For this reason, there is no requirement for projections on the skirt and the outside of the container rim. However, in an alternative embodiment projections can be included on the skirt and on the outside of the container rim as already described in relation to the assemblies of figures 1 to 8 if it is desirable to provide an even more secure retention of the cover onto the container.

In an alternative embodiment, the recess could be provided on the locking member projection, for cooperation with a corresponding projection on the inside surface of the container wall. It would also be possible to provide corresponding engagement features on the cover and the container by profiling the rim sections such that they engage in the locked position.

With reference to figures 10 and 11, there is shown an alternative assembly which is identical to the embodiment of figure 7 except that the locking member 632 includes an aperture 650 which defines an inside edge 651 and an outside edge 652, and allows a corresponding portion 653 of the cover rim to extend therebetween. The aperture is sized such that it forms a close fit with the portion 653 of the cover rim, but does not prevent the locking member 632 from hinging between the locked and unlocked positions. The inside edge 651 is positioned such that when the locking member 632 is in the locked position there is engagement between the inside edge 651 of the locking member 632 and the inside surface 657 of the corresponding portion 653 of the cover rim. Thus, in this embodiment, it is the inside edge 651 of the aperture which is acting as the engagement feature, and the locking member 632 is retained in the locked position by the snap-fit between the inside edge 651 of the aperture and the corresponding portion 653 of the cover. The provision of the outside edge 652 of the aperture also provides a more secure locked position of the locking member 632 since movement of the locking member is prevented by engagement of the cover portion 653 with the outside edge 652.

With reference to figure 12 there is shown an alternative assembly which is identical to the assembly of figures 10 and 11 except that in addition to the inside edge 751 of the aperture 750 engaging with the cover, a projection 724 is provided on the cover

adjacent to the aperture so as to provide a greater engagement area, and therefore a more secure retention of the locking member onto the cover. Thus the assembly of figure 12 can be considered as a combination of the embodiments of figures 7 and 11.

With reference to figure 13 there is shown an alternative assembly which is identical to the embodiment of figure 7 except that an additional projection 860 is provided on the locking member 832, and the cover inside rim 827 is extended radially outwardly such that it can engage with the additional projection 860 when the locking member is in the locked position. The provision of the additional projection 860 provides a more secure locked position in the same way as described in relation to the embodiment of figures 11 and 12, except that in this embodiment edge 652 is replaced by the projection 860, and edge 651is replaced by projection 824.

With reference to figure 14 there is shown an alternative assembly which is identical to the assemblies of figures 6 and 7 except that the hinge 918 is provided on the cover surface 934 and not on the skirt 915. Thus it can be seen by the position of the locking member 932 in the unlocked (dotted) and locked positions that the locking member hinges downwards as it moves from the unlocked to the locked position. It can also be seen that the hinge 918 is provided radially inward of the rim 908 of the container. The locking member is locked onto the cover, and the cover locked onto the container in the same manner as described in relation to the assemblies of figures 6 and 7, except that it is the projection 920 on the locking member skirt which snap-fits below the projection 906 on the outside of the container rim. By providing the hinge inward of the container rim it is possible, in an alternative embodiment, to remove the projection 924 altogether such that the locking member 932 is locked onto the container rim due to the snap-fit generated by engagement of projection 906 and projection 920 as the locking member hinges downwards about hinge 918 to the locked position. The cover is retained on the container due to the engagement between projection 906 and projection 920. Thus it can be seen that in this embodiment, the provision of the hinge 918 inside the container rim enables the projections 906,920 to both lock the locking member onto the rim, without the need for projection 924, and retain the cover on the container. As previously described, the provision of projection 924 on the locking member 932 will lock the locking member onto the container with a greater degree of security.

With reference to figure 15 there is shown an alternative assembly which is identical to that of figure 14 except that the locking member 1032 engages directly onto the container rim 1008 and not onto the cover rim.

It is possible to modify this embodiment in the same manner as that of figure 14 by removing projection 1024, and relying on the snap-fit between projection 1006 and projection 1020.

It is also possible to modify this embodiment by removing projections 1006,1020, and configuring the projection 1024 on the locking member and the container rim 1008 as described in relation to the embodiment of figure 9 such that the locking member is retained on the container by a snap-fit between the locking member projection 1024 and the container rim 1008.

It can be seen from the embodiments of figures 14 and 15 that it is the provision of the hinge radially inward of the container rim which enables the locking member to hinge such that it passes over the rim of the container, and allows the locking member to lock onto the container rim.

Figure 16 shows the underside of a container 40 in which a scalloped region 42 is moulded or otherwise indented into the base to facilitate gripping of the container by a hand during use.

Claims

1. A container assembly comprising a container and a cover, wherein the container has a peripheral wall defining a rim enclosing an opening at one end thereof, and wherein the cover is provided for releasably closing the opening, the assembly being provided with at least one locking member that is hingeable between an unlocked position and a locked position, the at least one locking member having a locking member engagement feature which engages with a corresponding engagement feature on the cover and/or the container in the locked position to lock the cover to the container, in which the locking member passes over the rim of the container and/or a rim of the cover as the locking member hinges between the unlocked and locked positions such that the locking member locks onto the container rim.

2. A container assembly according to claim 1 in which the locking member hinges upwardly from the unlocked to the locked position.

3. A container assembly according to claim 2 in which the or each locking member hinges onto the closing surface of the cover.

4. A container assembly according to claim 2 or 3 in which the or each locking member hinges so as to dispose their free ends within the area defined by the rim.

5. A container assembly according to any preceding claim in which the free ends of the or each locking member lie substantially flush with the upper or outer surface of the cover, or at least disposed below the level of the rim or inside the outer surface of the cover.

6. A container assembly comprising a container and a cover, wherein the container has a peripheral wall defining a rim enclosing an opening at one end thereof, and wherein the cover is provided for releasably closing the opening, the assembly being provided with at least one locking member that is hingeable between an unlocked position and a locked position, the at least one locking member having a locking member engagement feature which engages with a corresponding

engagement feature on the cover and/or the container in the locked position to lock the cover to the container, in which the locking member hinges upwardly from the unlocked to the locked position.

7. A container assembly according to any one of claims 2 to 6 in which the cover has a closing surface for closing the opening of the container, and a skirt depending from the closing surface, the or each locking member being hingeably connected to the skirt, preferably the or each locking member is integrally formed with the skirt, more preferably the or each locking member is integrally formed with the skirt by a live hinge.

8. A container assembly according to claim 7 in which the or each locking member is hinged to the skirt at a lower free edge of the skirt.

9. A container assembly according to any one of claims 1 to 6 in which the or each locking member is hingeably connected to the container.

10. A container assembly according to claim 1 in which the locking member is hingeably connected to the cover at a position which is radially inward of the rim.

11. A container assembly according to claim 10 in which the or each locking member is integrally formed with the cover, preferably the or each locking member is integrally formed with the cover by a live hinge.

12. A container assembly according to claim 10 or 11 in which the or each locking member hinges downwardly from the unlocked to the locked position.

13. A container assembly according to any preceding claim in which the locking member locks onto the container rim directly by engaging with the container rim.

14. A container assembly according to any preceding claim in which the cover includes a sealing surface which engages with an inside surface of the peripheral wall of the container to form a seal therebetween.

15. A container assembly according to any preceding claim in which the or each locking member is arranged to snap-fit onto the cover and/or the container.

16. A closure assembly according to any preceding claim in which the or each locking member is arranged to snap-fit over a rim of the container and/or over a rim of the cover.

17. A closure assembly according to any preceding claim in which a window is formed in a or the skirt at the peripheral location of the or each locking member whereby the or each locking member fits into the window in the locked position.

18. A closure assembly according to claim 17 in which the locking member fits into the window such that it lies substantially flush with the outer peripheral surface of the skirt in the locked position.

19. A closure assembly according to any preceding claim in which the or each locking member includes an engagement feature which engages over a rim of the cover and/or the rim of the container in the locked position.

20. A container assembly according to claim 19 in which the rim of the cover is arranged to lie within the peripheral wall of the container adjacent the rim of the container.

21. A container assembly according to claim 20 in which the thickness of the rim of the cover is locally increased in the region of the or each locking member.

22. A container assembly according to any preceding claim comprising two or more, preferably three of said locking members.

23. A container assembly according to any preceding claim in which the container and the cover are of generally circular configuration.

24. A container assembly according to any preceding claim in which the surface of the cover for closing the opening of the container comprises a channel that is arranged to receive the rim of the container.

25. A container assembly according to claim 24 in which the or each locking member lies substantially flush with the outer surface of the channel when in the locked position.

26. A container assembly according to any preceding claim in which the locking member includes an aperture, and an edge of the aperture defines the engagement feature of the or each locking member.

27. A container assembly according to any preceding claim in which the or each locking member is provided with at least one locking member engagement feature, and the cover is provided with at least one corresponding cover engagement feature, such that the corresponding at least one engagement features engage with each other when the locking member is in the locked position.

28. A container assembly according to any preceding claim in which the or each locking member is provided with an engagement feature at a position radially inward of the rim, for engagement with an inside surface of the container peripheral wall, and/or an inside surface of a rim of the cover in the locked position.

29. A container assembly according to any preceding claim in which a surface of the cover for closing the container lies substantially flush with the top of the or each locking member when in the locked position.

30. A container assembly according to any preceding claim in which the at least one engagement feature of the container is provided on the peripheral wall of the container in the form of an outwardly directed projection extending at least partially around the outer surface of the peripheral wall adjacent the opening, and the corresponding engagement feature on the or each locking member is an inwardly directed projection provided on the skirt for cooperating with the

outwardly directed projection of the container, the projections engaging with each other in the locked position.

31. A container assembly according to any preceding claim in which the cover and/or the container is plastic, preferably moulded, more preferably injection moulded.

32. A container assembly according to any preceding claim in which the container is a paint container.

33. A container assembly according to any preceding claim in which the engagement features comprise inwardly or outwardly directed projections.

34. Closure arrangement for a container, wherein the container has a peripheral wall defining a rim enclosing an opening at one end thereof, the peripheral wall having at least one outwardly-directed projection extending at least partially around the outer surface of the wall adjacent the opening, and wherein a cover is provided for releasably closing the opening, the cover having a surface for closing the opening of the container and a skirt depending therefrom to enclose the projection of the container, the skirt being provided with at least one hinged locking member that has (a) an inwardly-directed projection for co-operating with the outwardly-directed projection of the container, and (b) a lip for passing over the rim of the container at the opening thereof and engaging onto the cover, thereby to lock the cover to the container, with the respective inwardly-and outwardly-directed projections engaging with each other.

35. A container assembly substantially as hereinbefore described with reference to the accompanying drawings.

36. A closure arrangement substantially as hereinbefore described with reference to the accompanying drawings.