[図1]

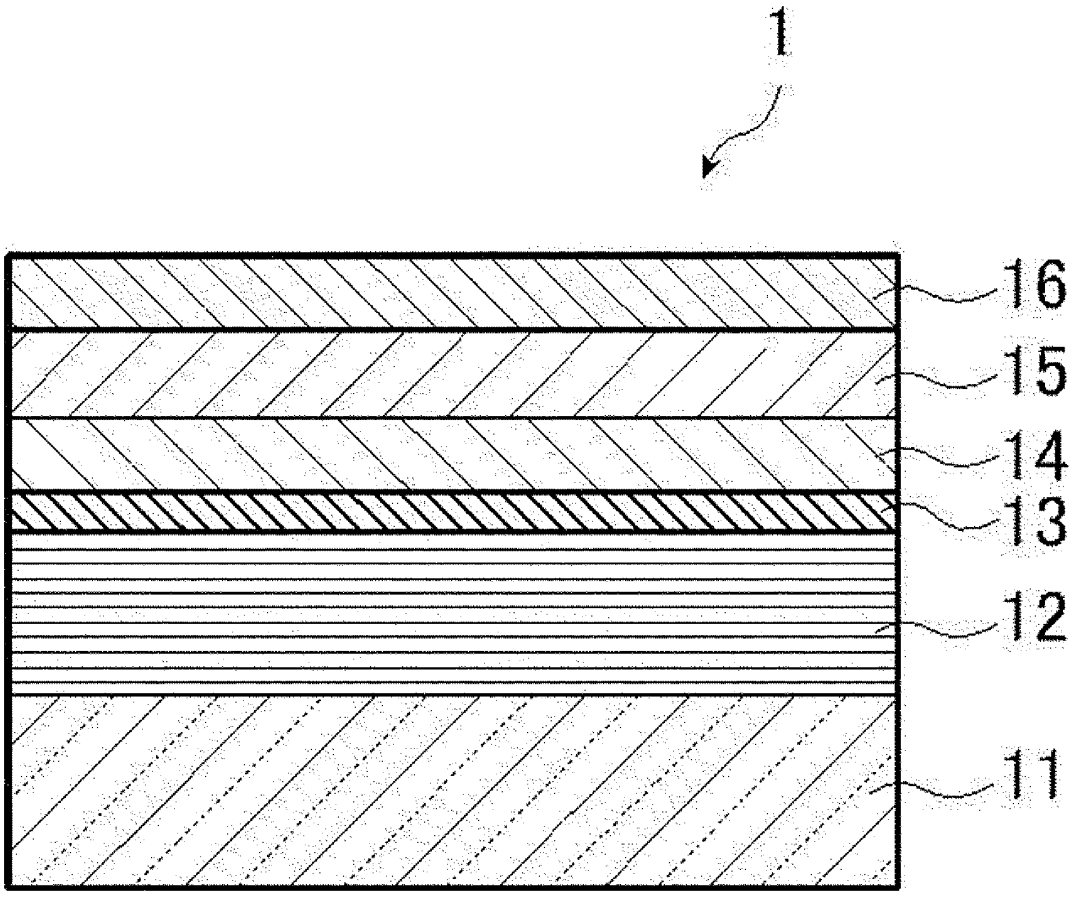

[図2]

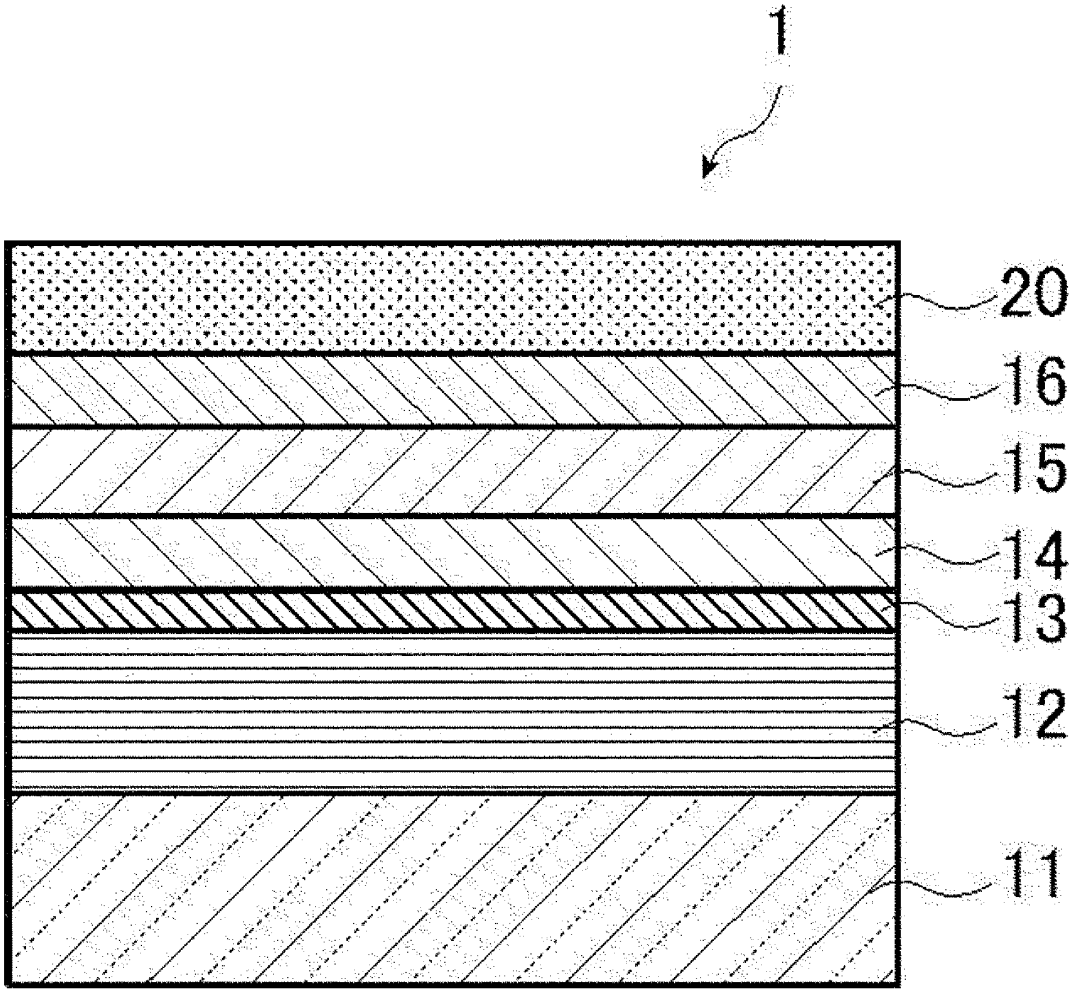

[図3]

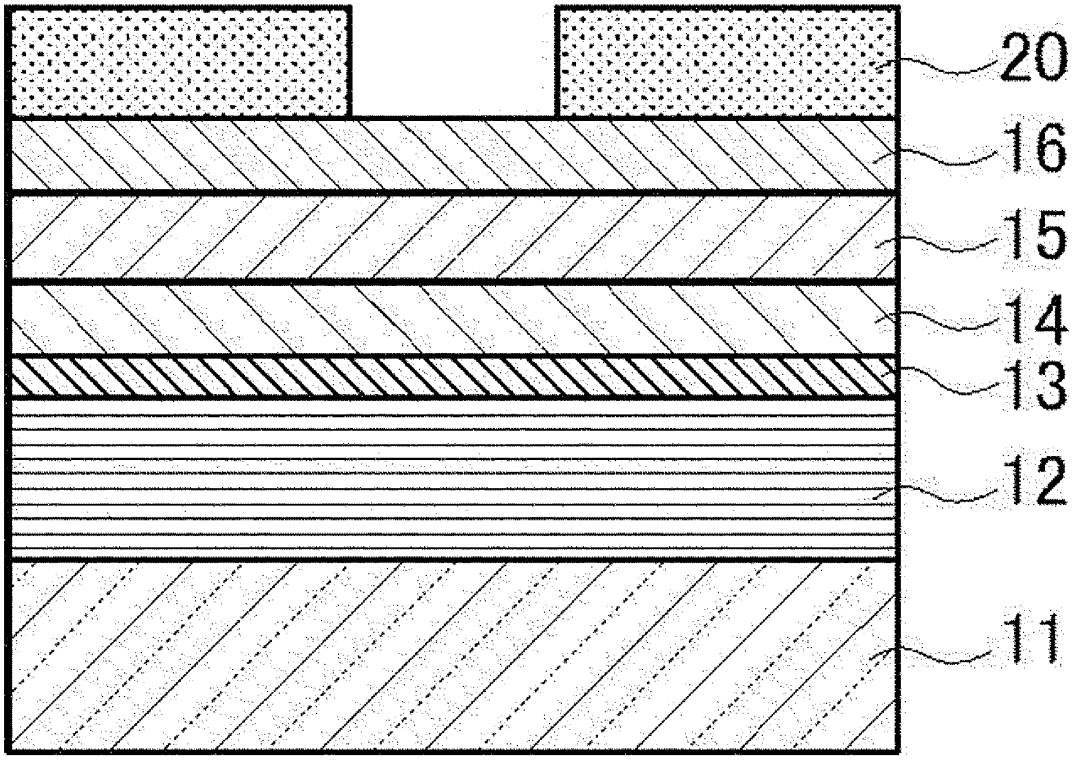

[図4]

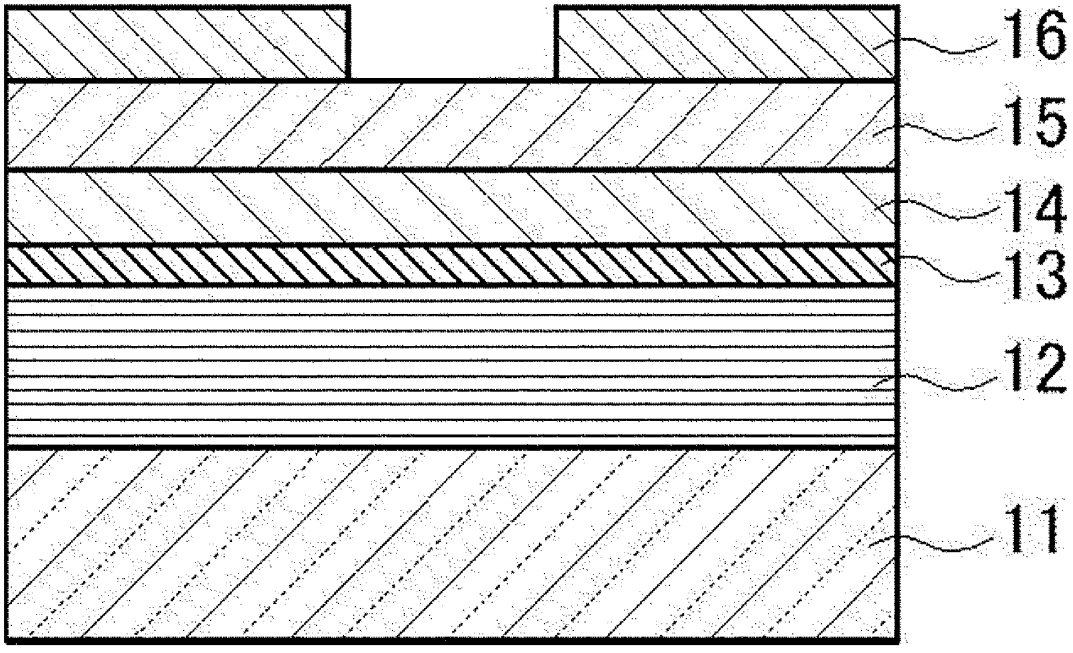

[図5]

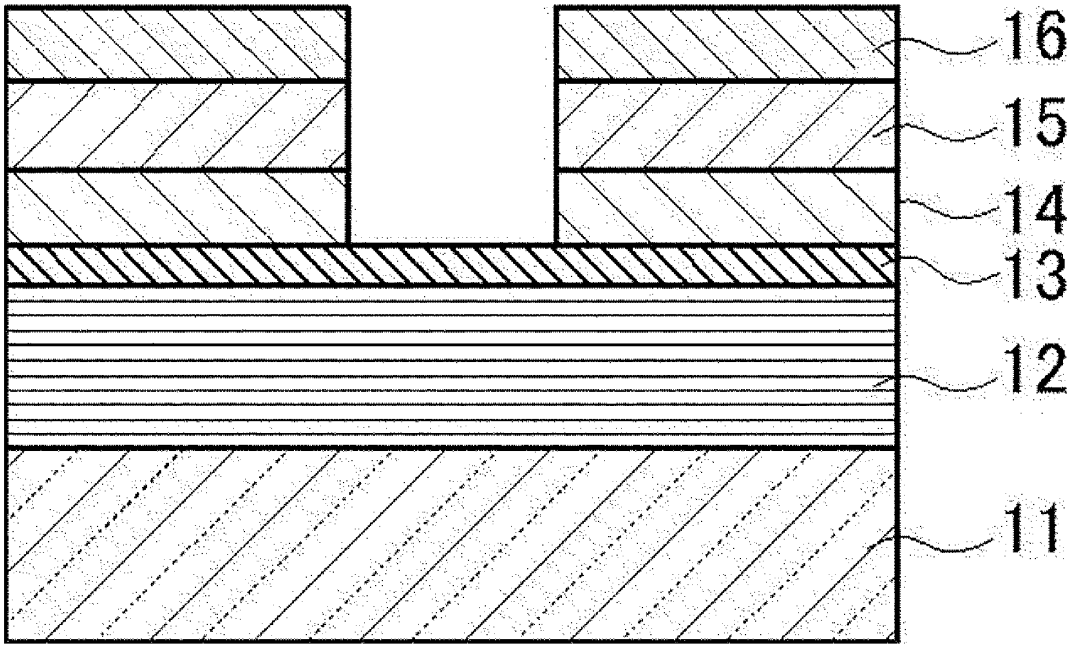

[図6]

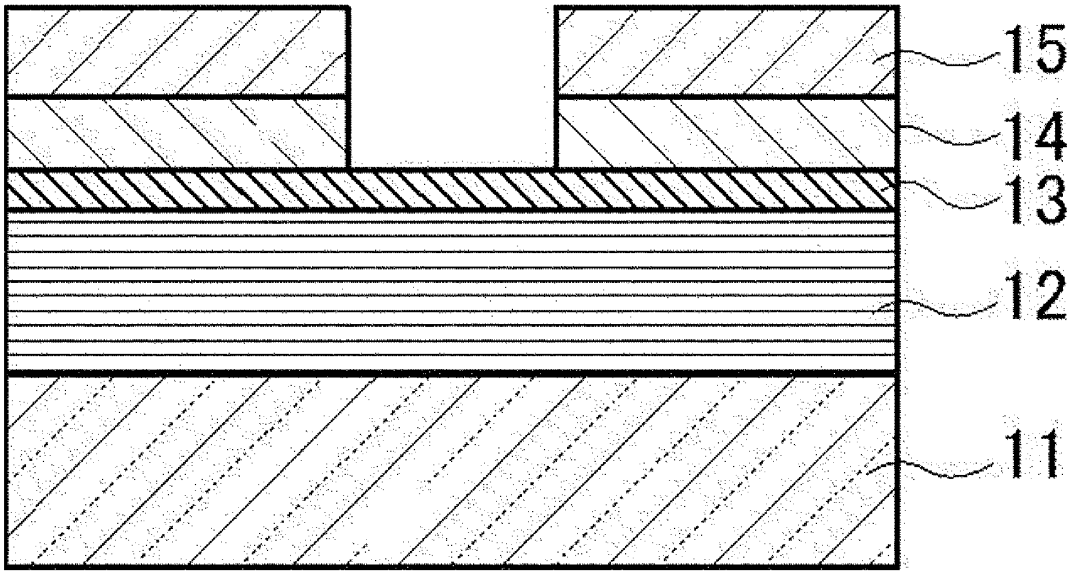

[図7]

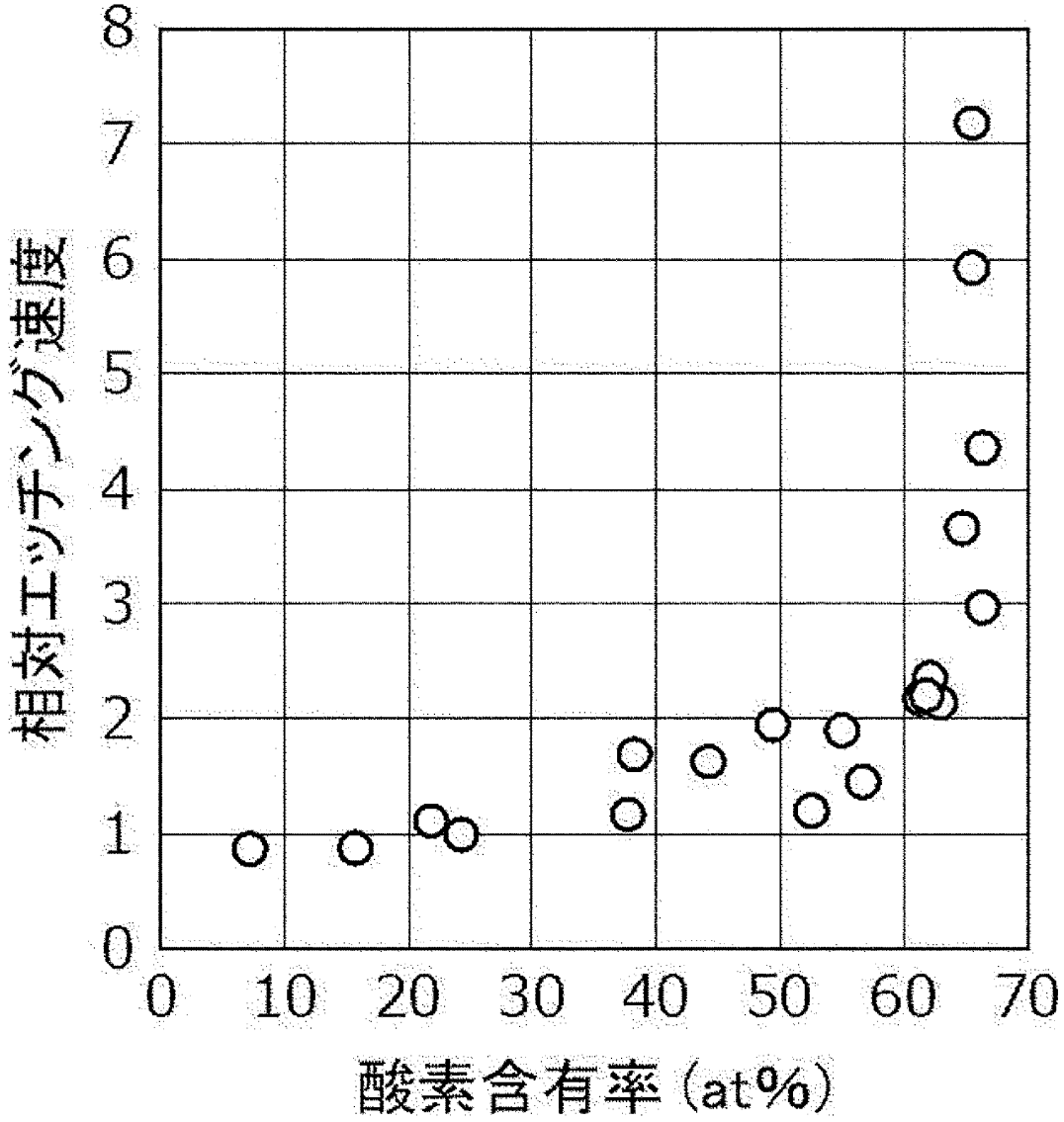

[図8]

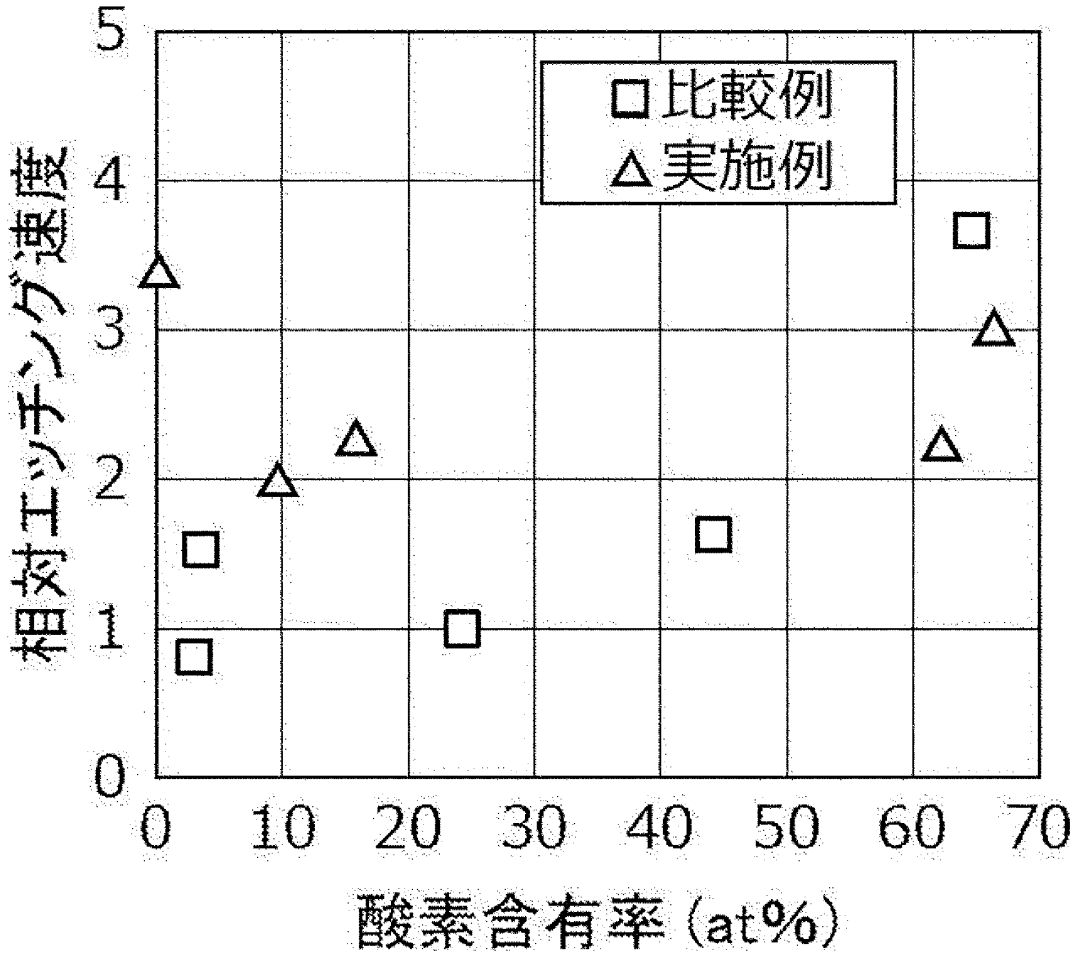

[図9]

