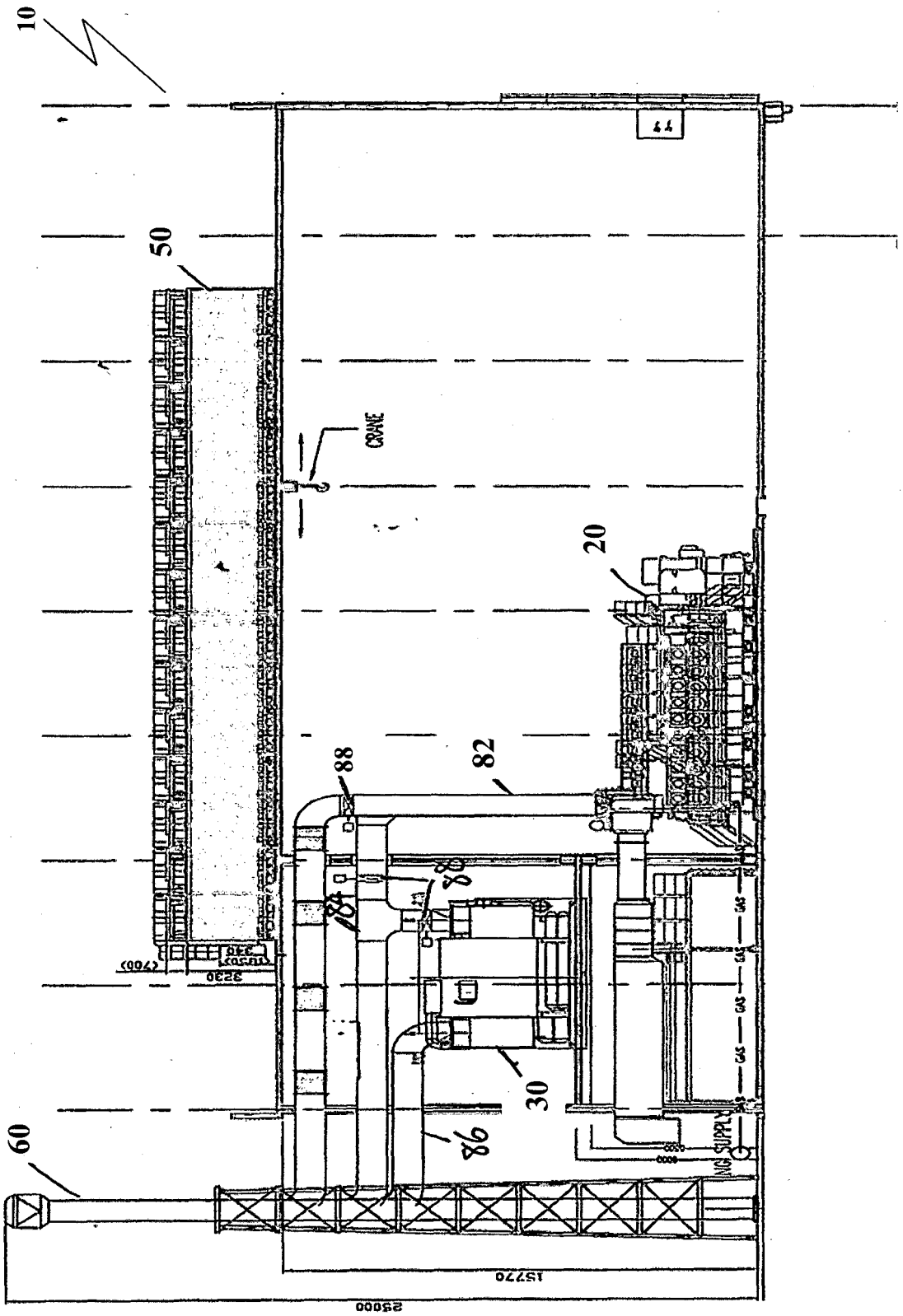
10
50
CRANE
20
88
82
84
88
30
86
60
NG SUPPLY
GAS
15770
25000
3230

Fig. 1

2/4

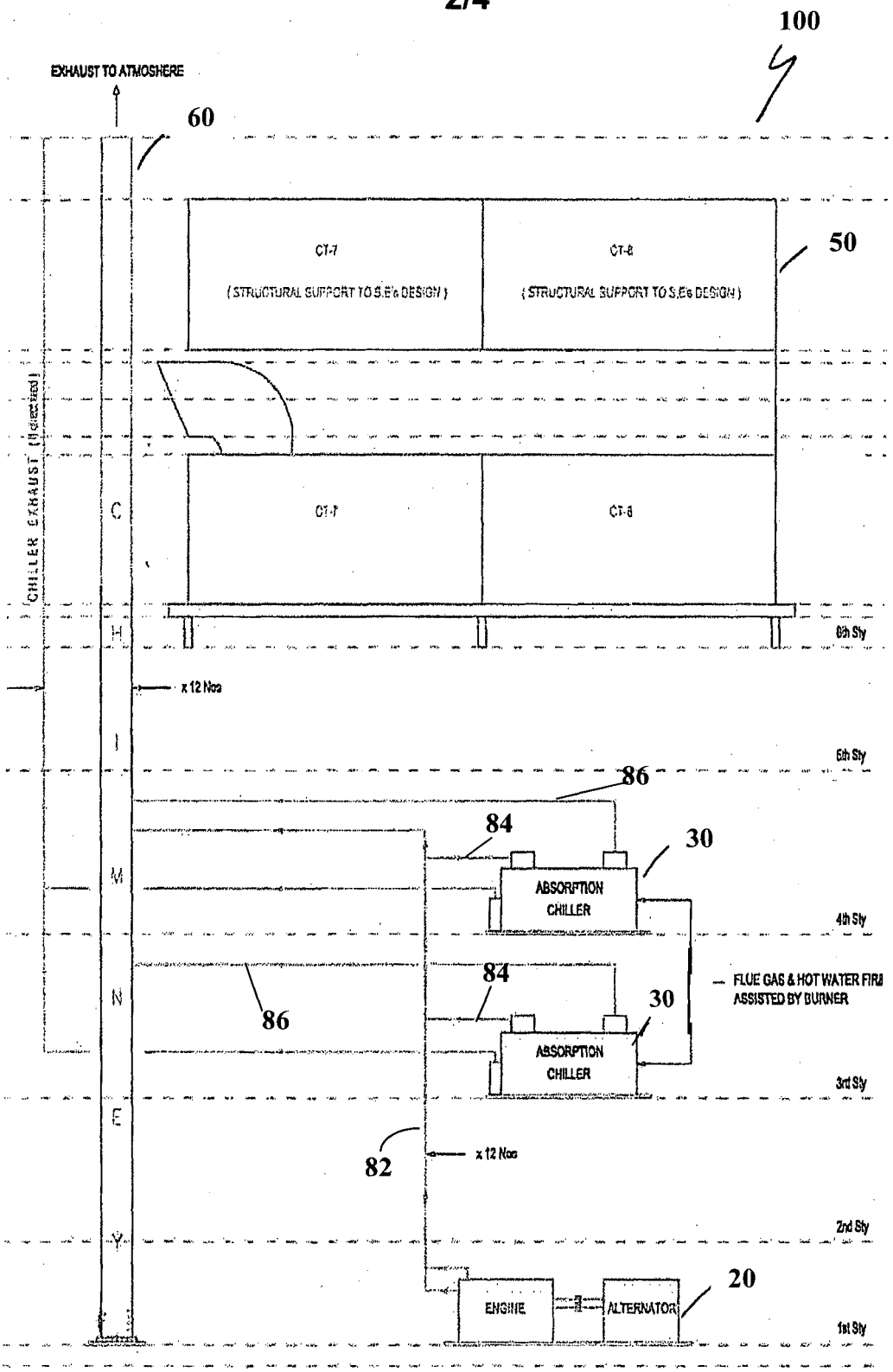
100
EXHAUST TO ATMOSHERE
60
50
CT-7
(STRUCTURAL SUPPORT TO S.E's DESIGN)
CT-8
(STRUCTURAL SUPPORT TO S.E's DESIGN)
CHILLER EXHAUST
C
H
I
M
N
E
Y
x 12 Nos
8th Sty
6th Sty
86
84
30
ABSORPTION CHILLER
4th Sty
FLUE GAS & HOT WATER FIRE ASSISTED BY BURNER
3rd Sty
82
2nd Sty
20
ENGINE
ALTERNATOR
1st Sty

Fig. 2

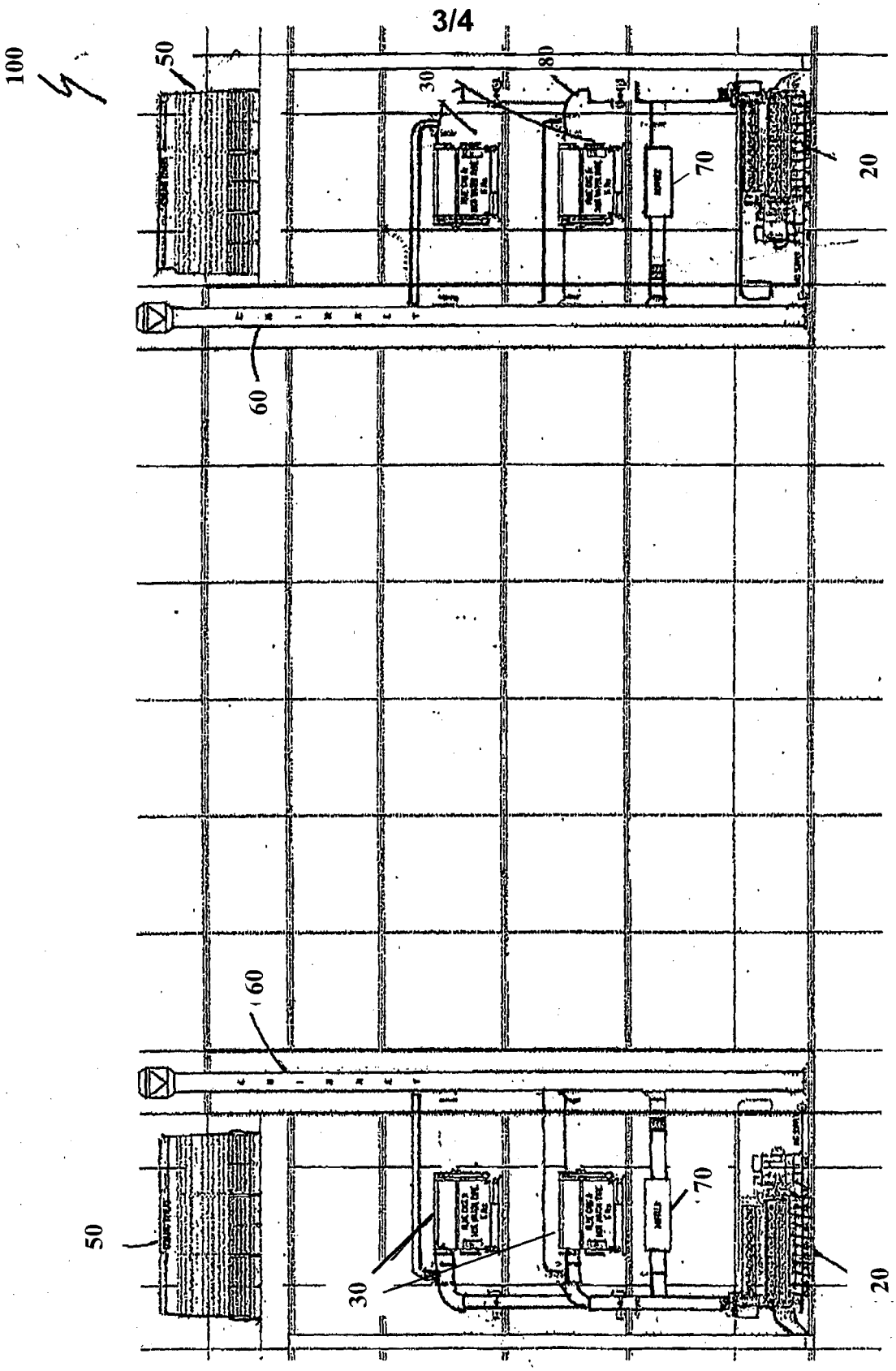

Fig. 3

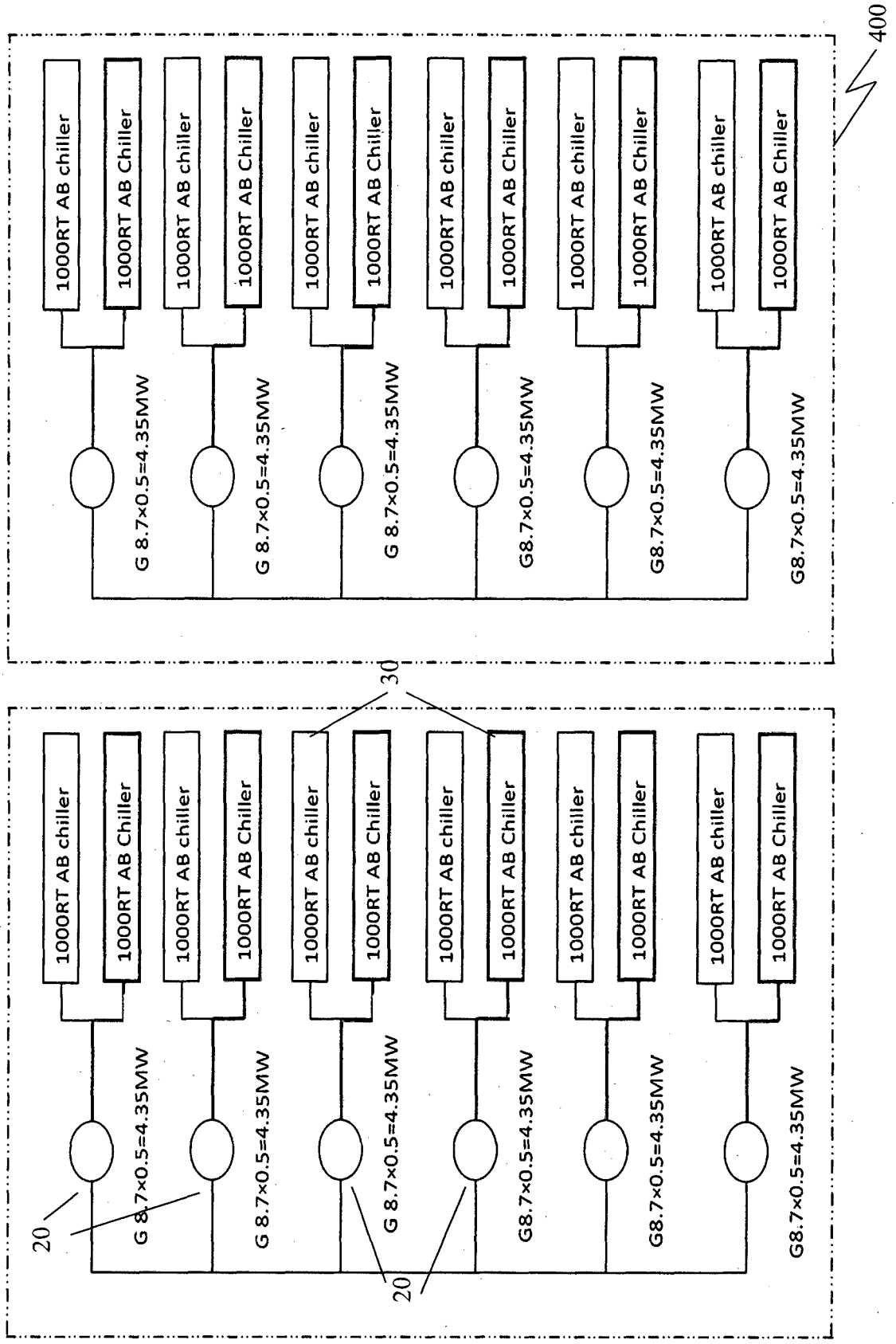
400
1000RT AB chiller
1000RT AB Chiller
G 8.7×0.5=4.35MW
G8.7×0.5=4.35MW
30
20

Fig. 4