Fig. 1

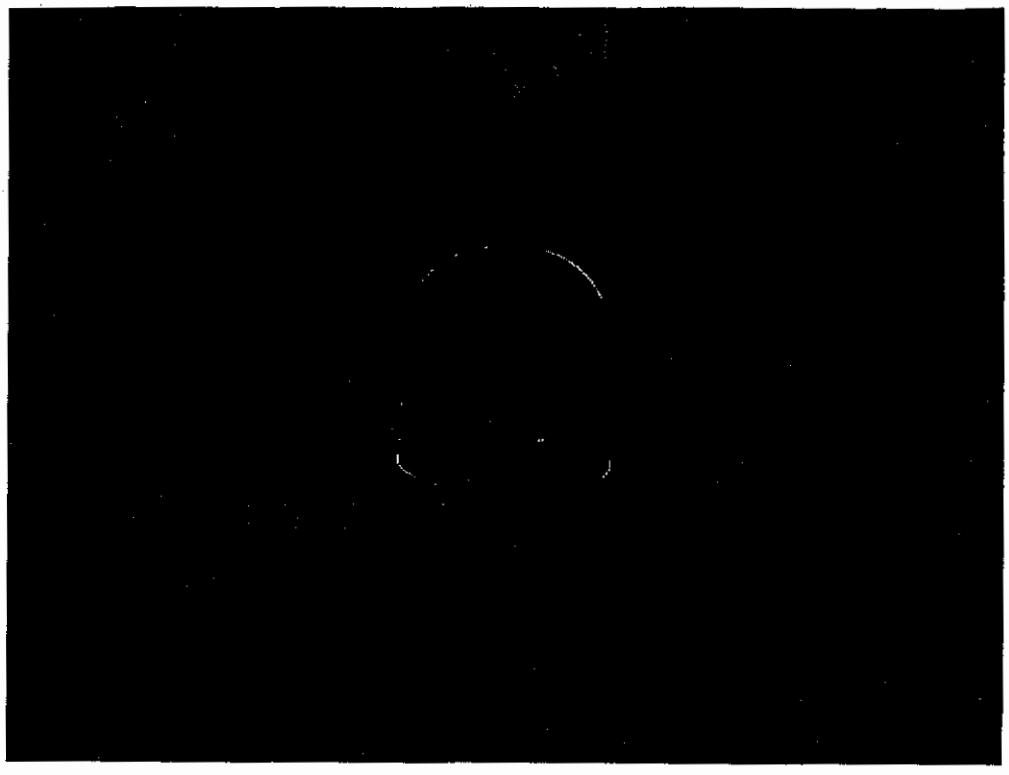

Fig. 2

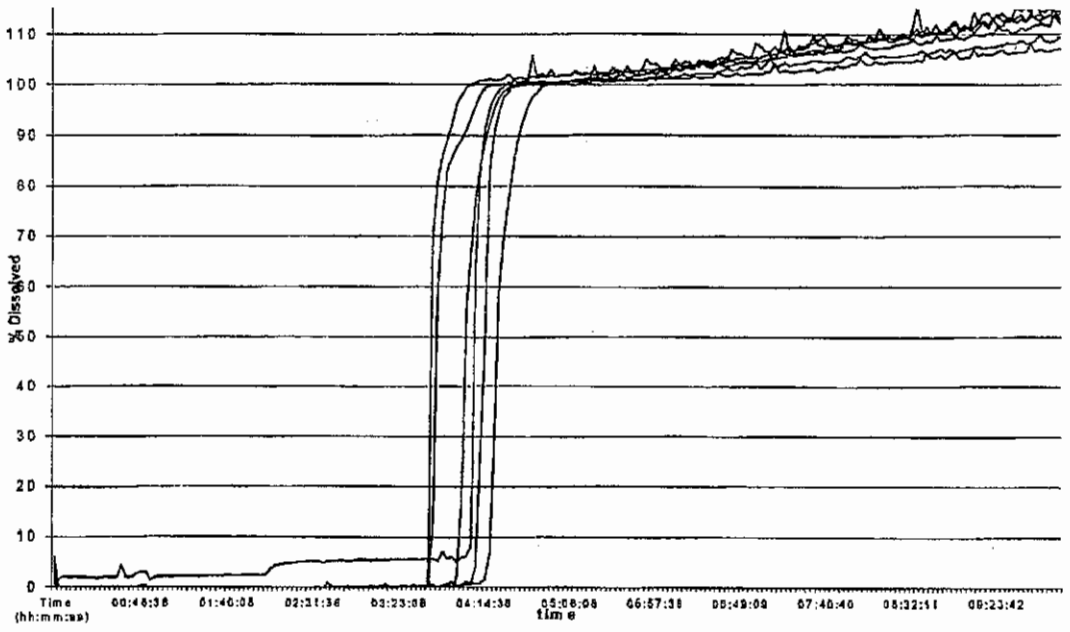
110
100
90
80
70
60
50
40
30
20
10
0
% Dissolved
Time
(hh:mm:ss)
00:46:38
01:40:08
02:31:38
03:23:08
04:14:38
05:06:08
05:57:38
06:49:09
07:40:40
08:32:11
09:23:42
time

Fig. 3

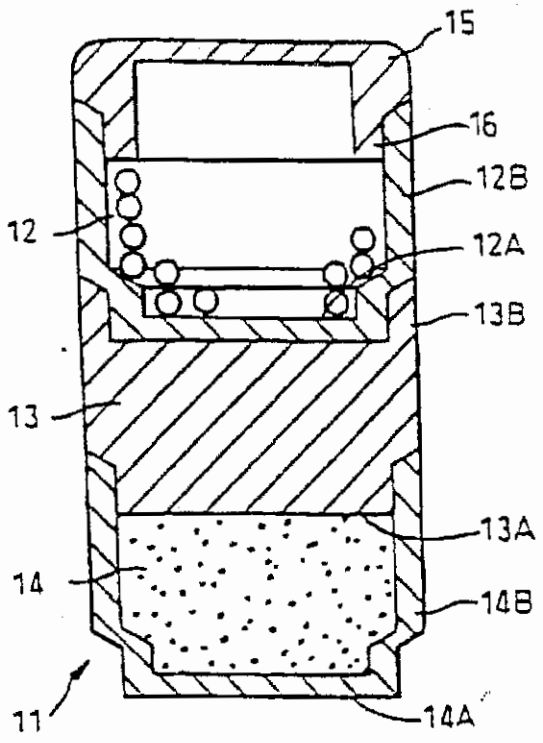
15
16
12B
12
12A
13B
13
13A
14
14B
11
14A

Fig. 4

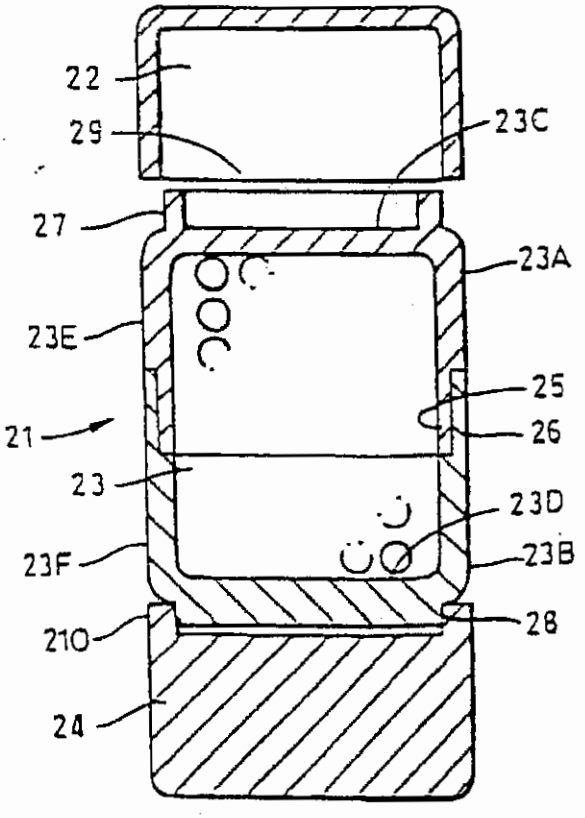
22
29
23C
27
23A
23E
25
21
26
23
23D
23F
23B
28
210
24

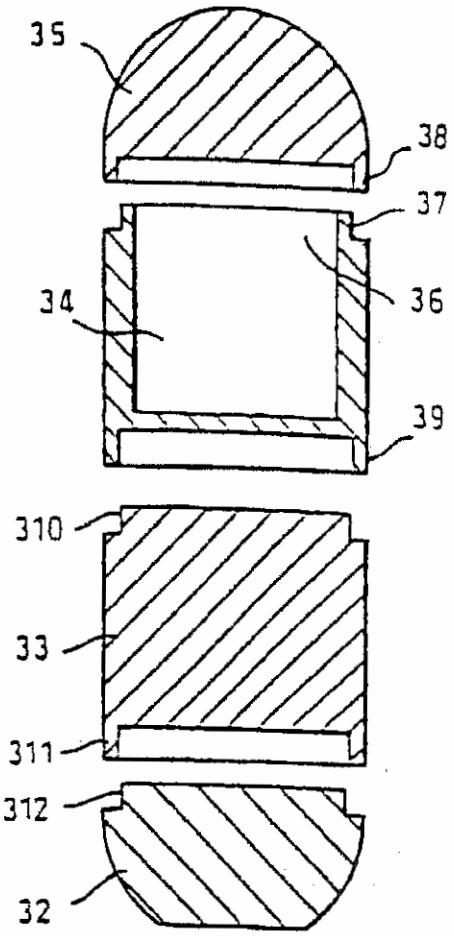

Fig. 5A

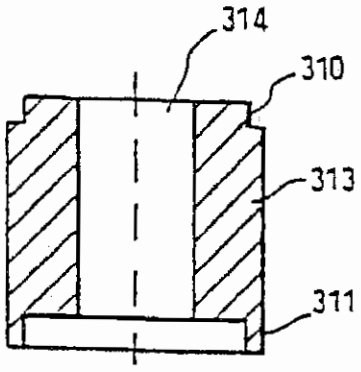

Fig. 5B

Fig. 6

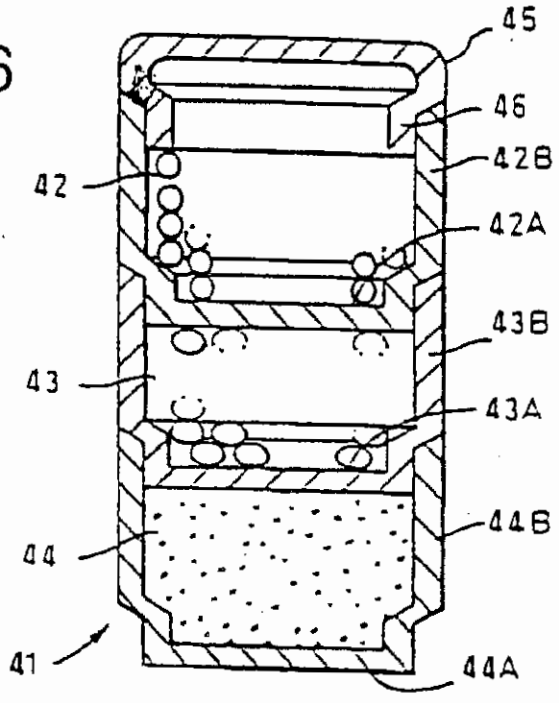

Fig. 7

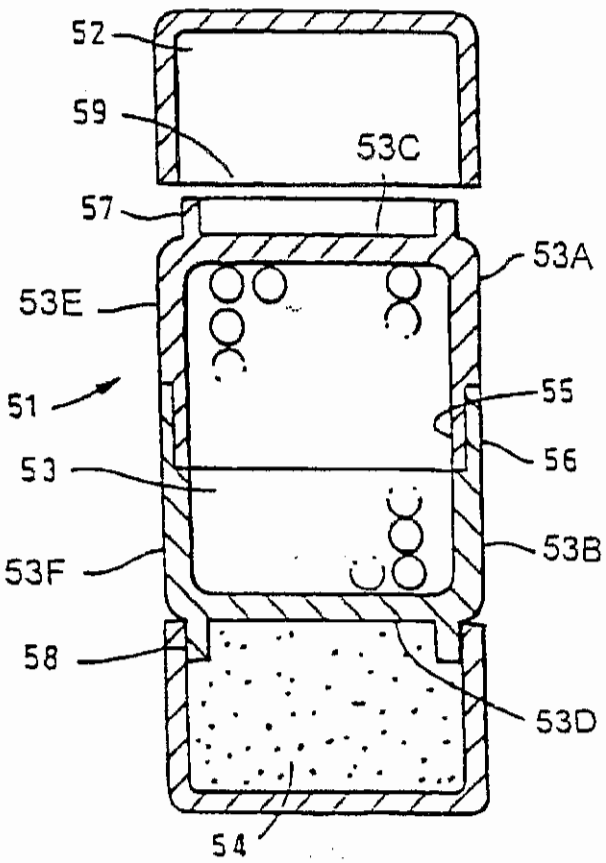

Fig. 8A

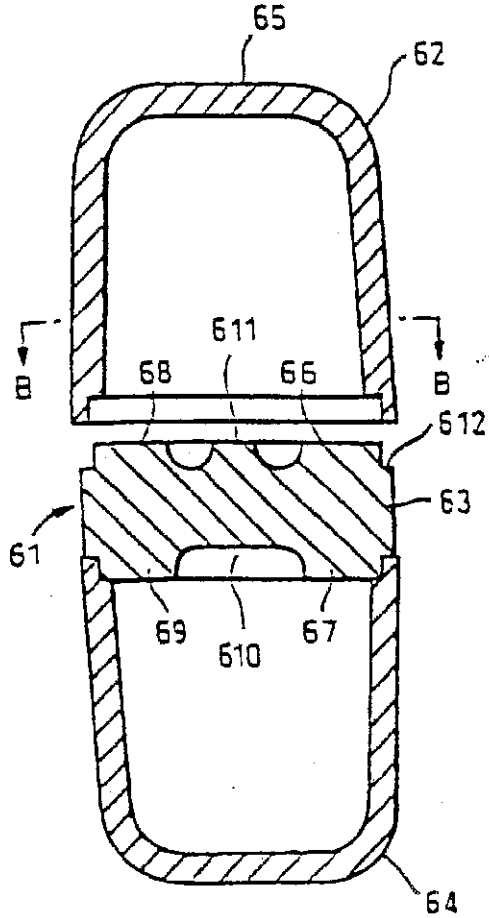

Fig. 8B

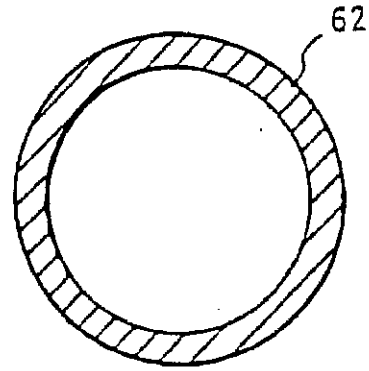

Fig. 8C

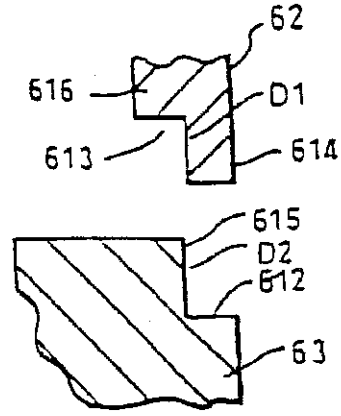

Fig. 9

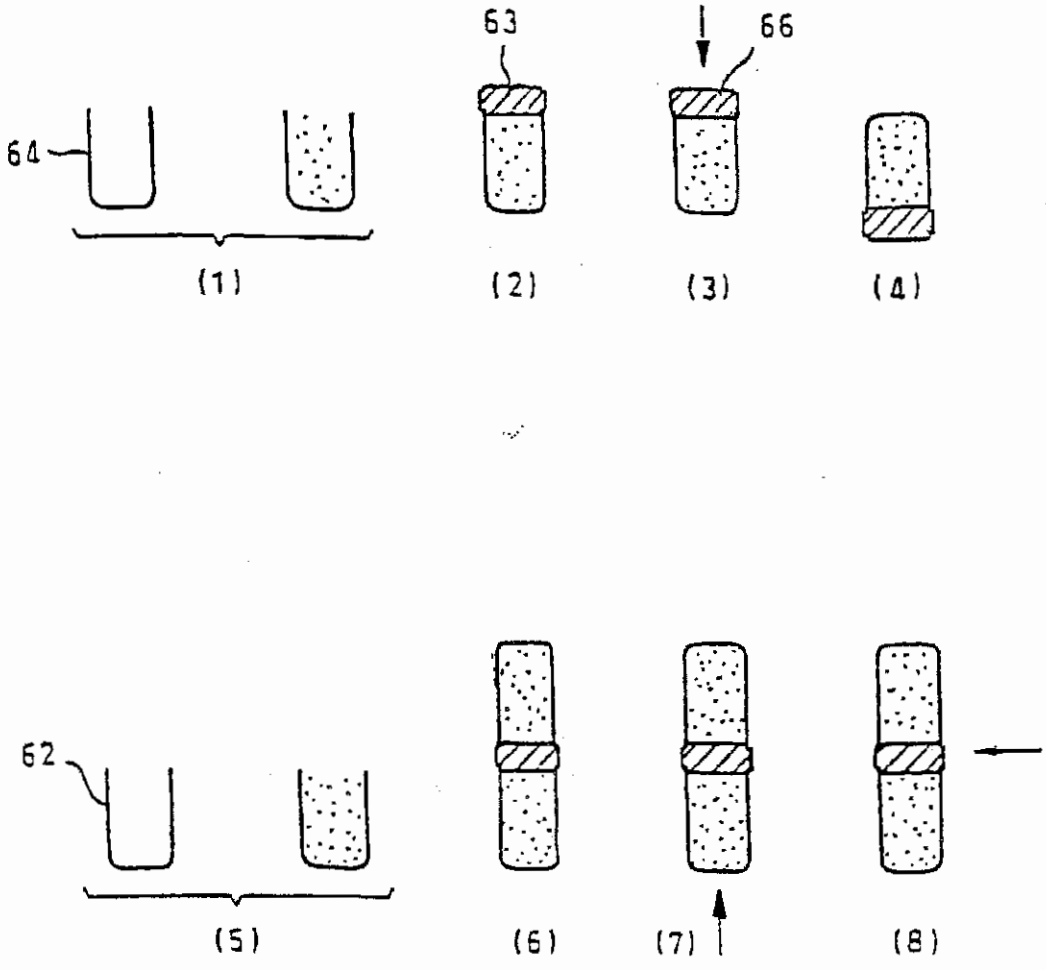

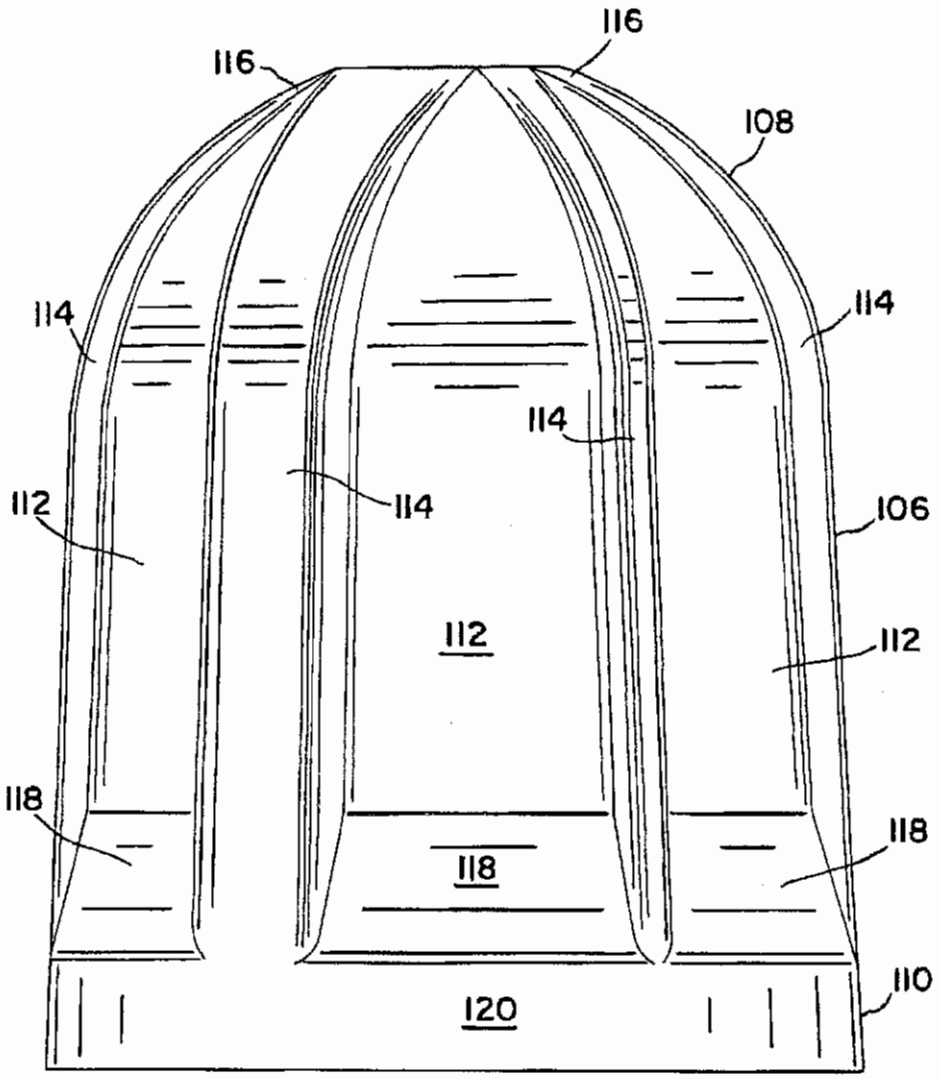

FIG. 10

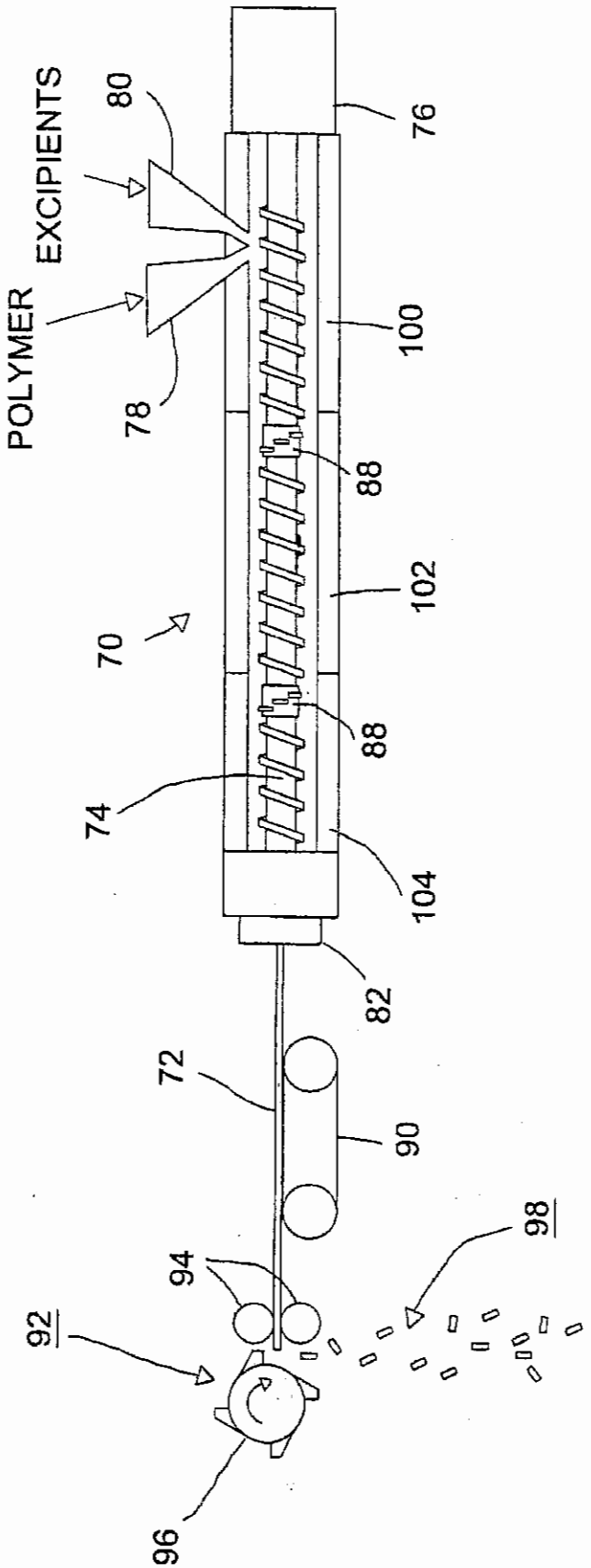
POLYMER
EXCIPIENTS
80
78
76
100
88
102
70
88
74
104
82
72
90
98
94
92
96

FIG. 11

FIG. 12

EUDRAGIT E100 Blends

