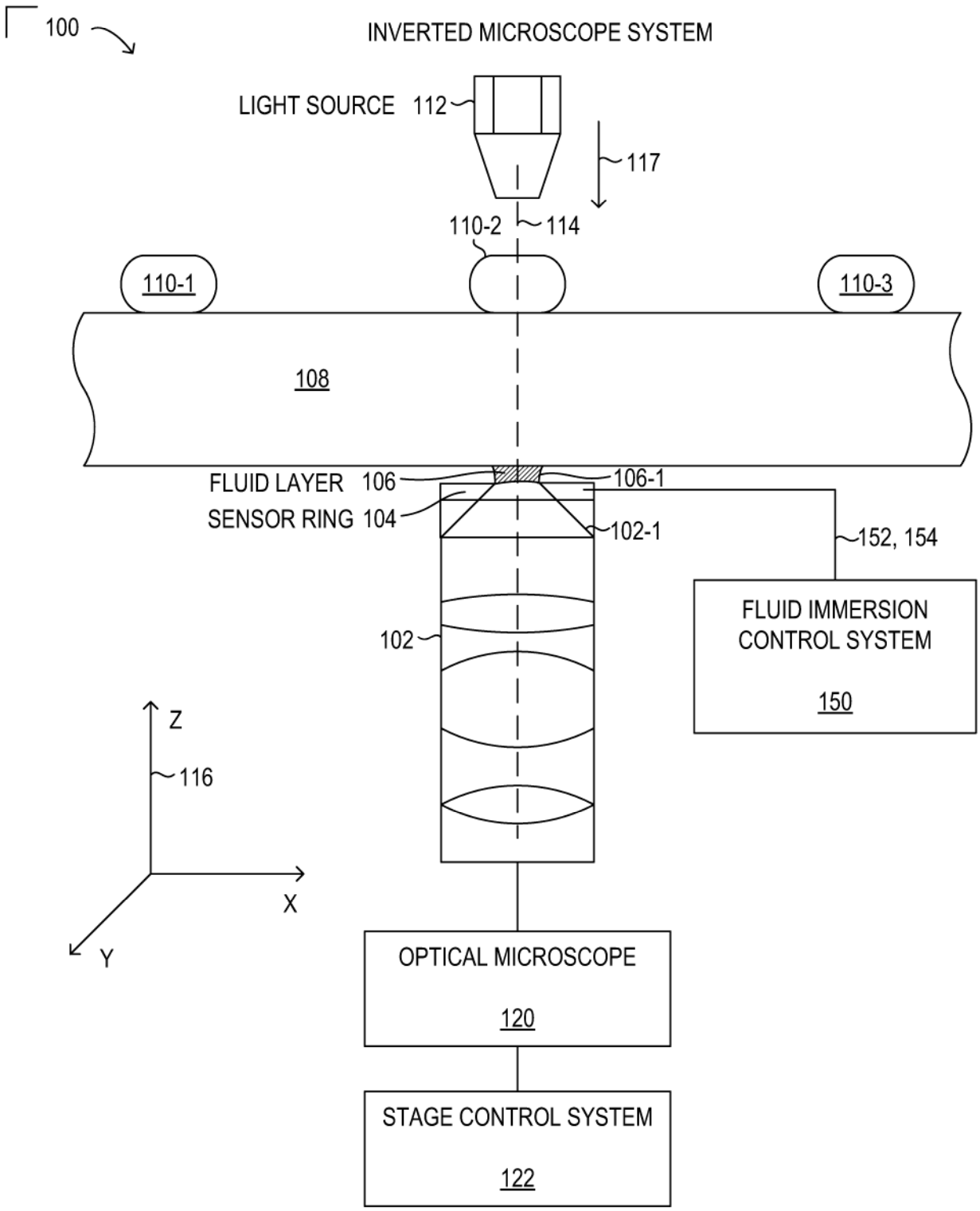
100
INVERTED MICROSCOPE SYSTEM
LIGHT SOURCE 112
117
110-2
114
110-1
110-3
108
FLUID LAYER 106
106-1
SENSOR RING 104
102-1
152, 154
FLUID IMMERSION CONTROL SYSTEM
150
102
Z
116
X
Y
OPTICAL MICROSCOPE
120
STAGE CONTROL SYSTEM
122

FIG. 1

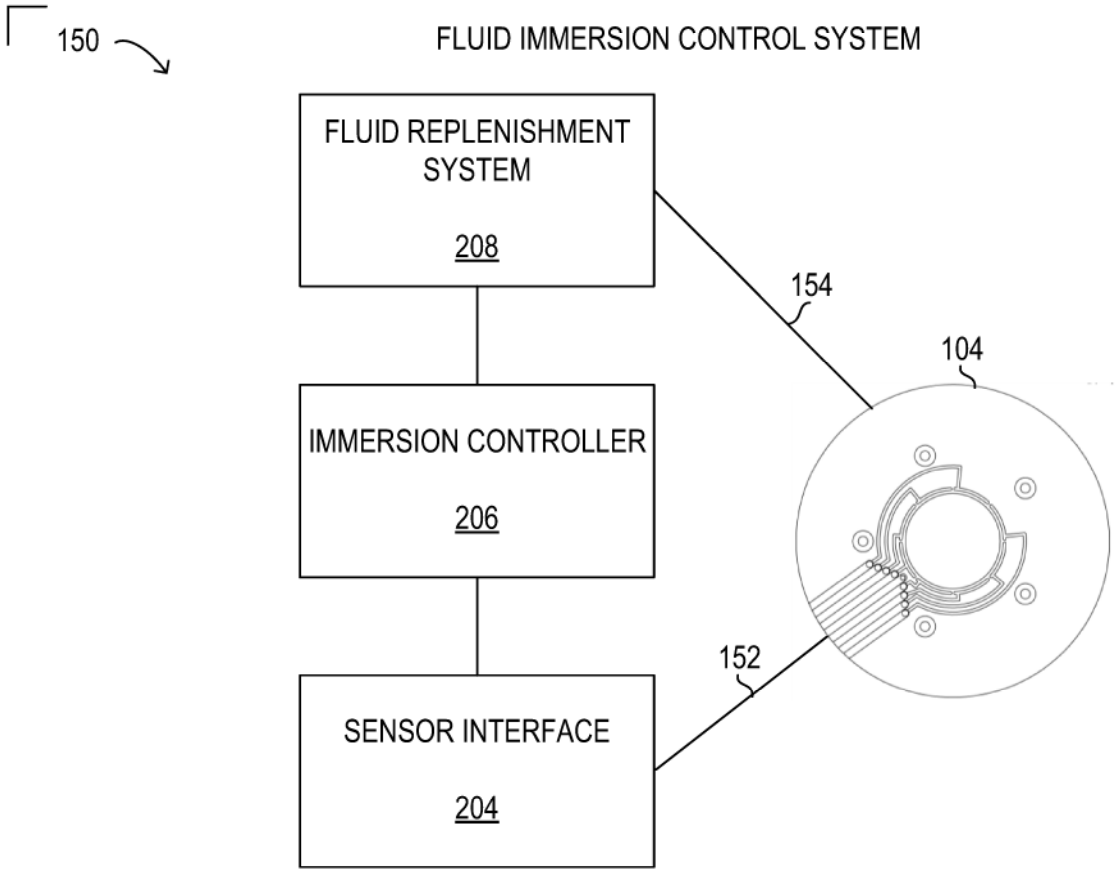
150
FLUID IMMERSION CONTROL SYSTEM
FLUID REPLENISHMENT SYSTEM
208
IMMERSION CONTROLLER
206
SENSOR INTERFACE
204
154
104
152

FIG. 2

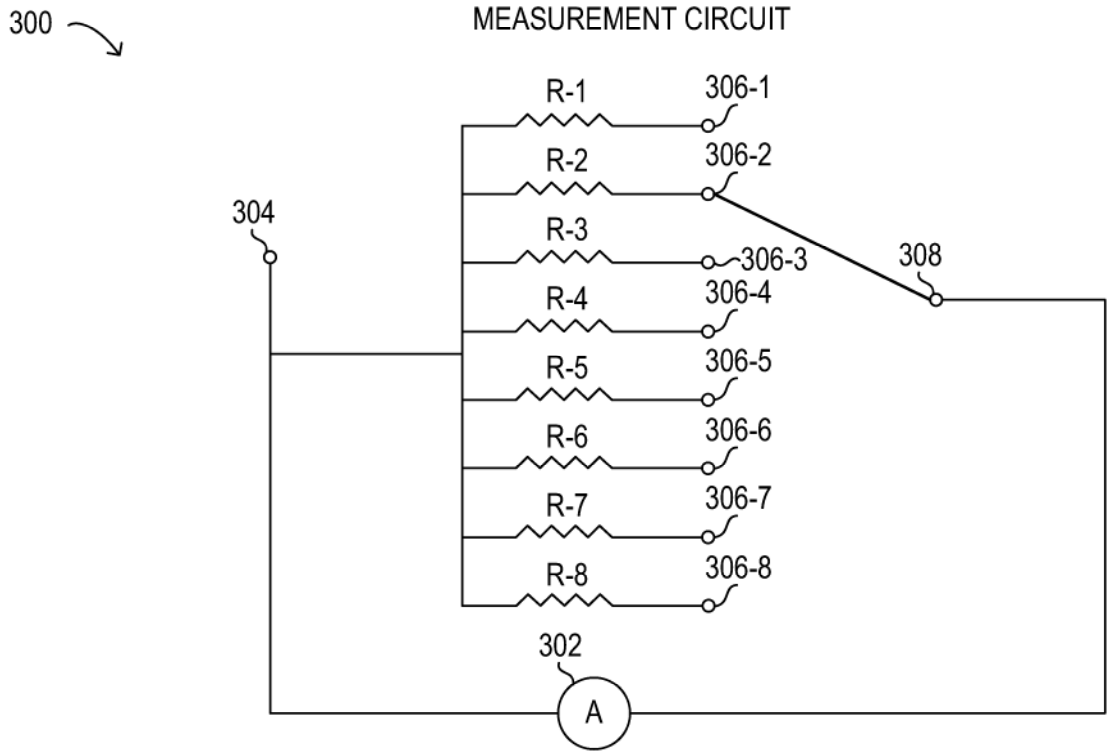
300
MEASUREMENT CIRCUIT
R-1
306-1
R-2
306-2
304
R-3
306-3
308
R-4
306-4
R-5
306-5
R-6
306-6
R-7
306-7
R-8
306-8
302
A

FIG. 3

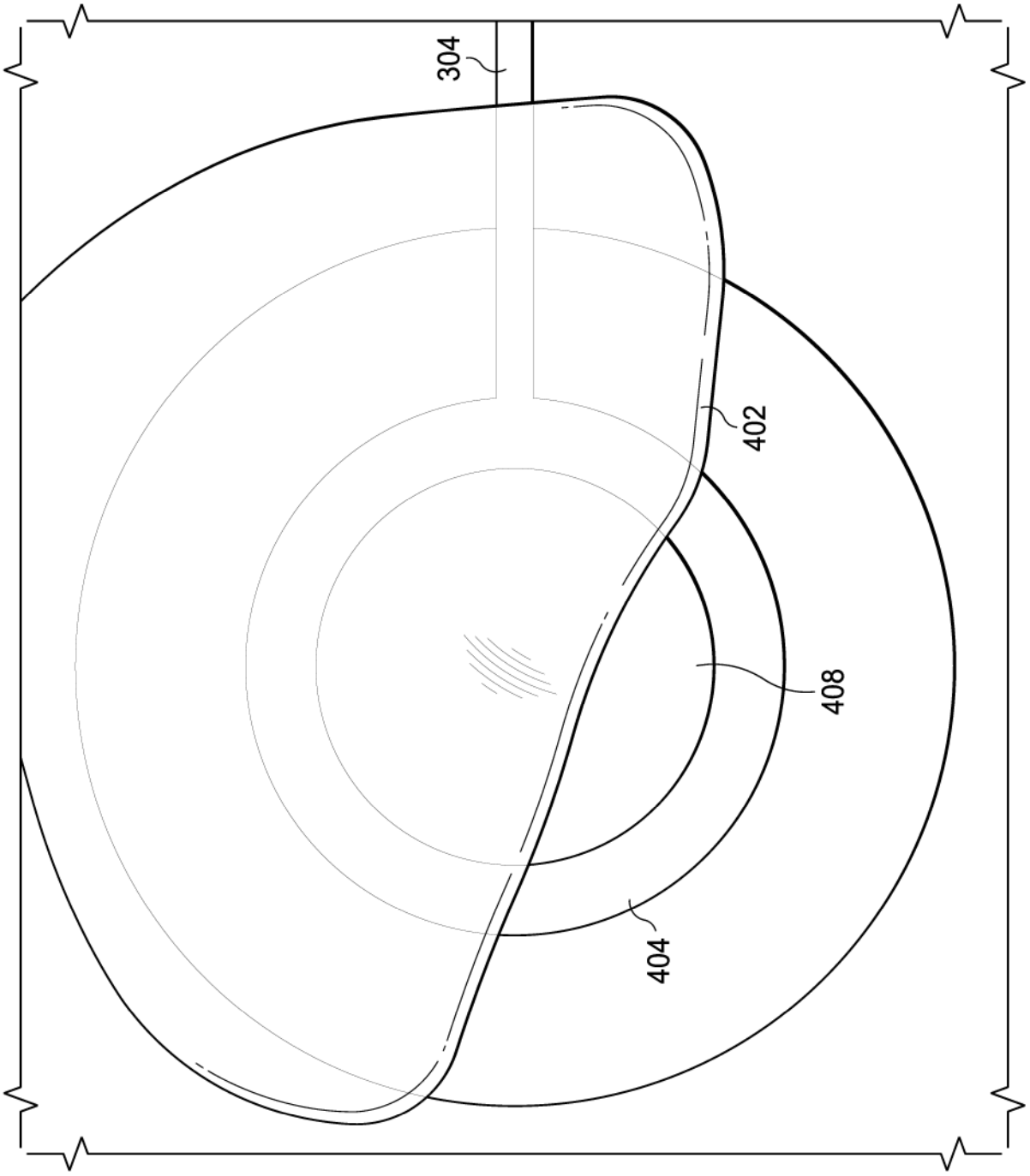

FIG. 4
(PRIOR ART)

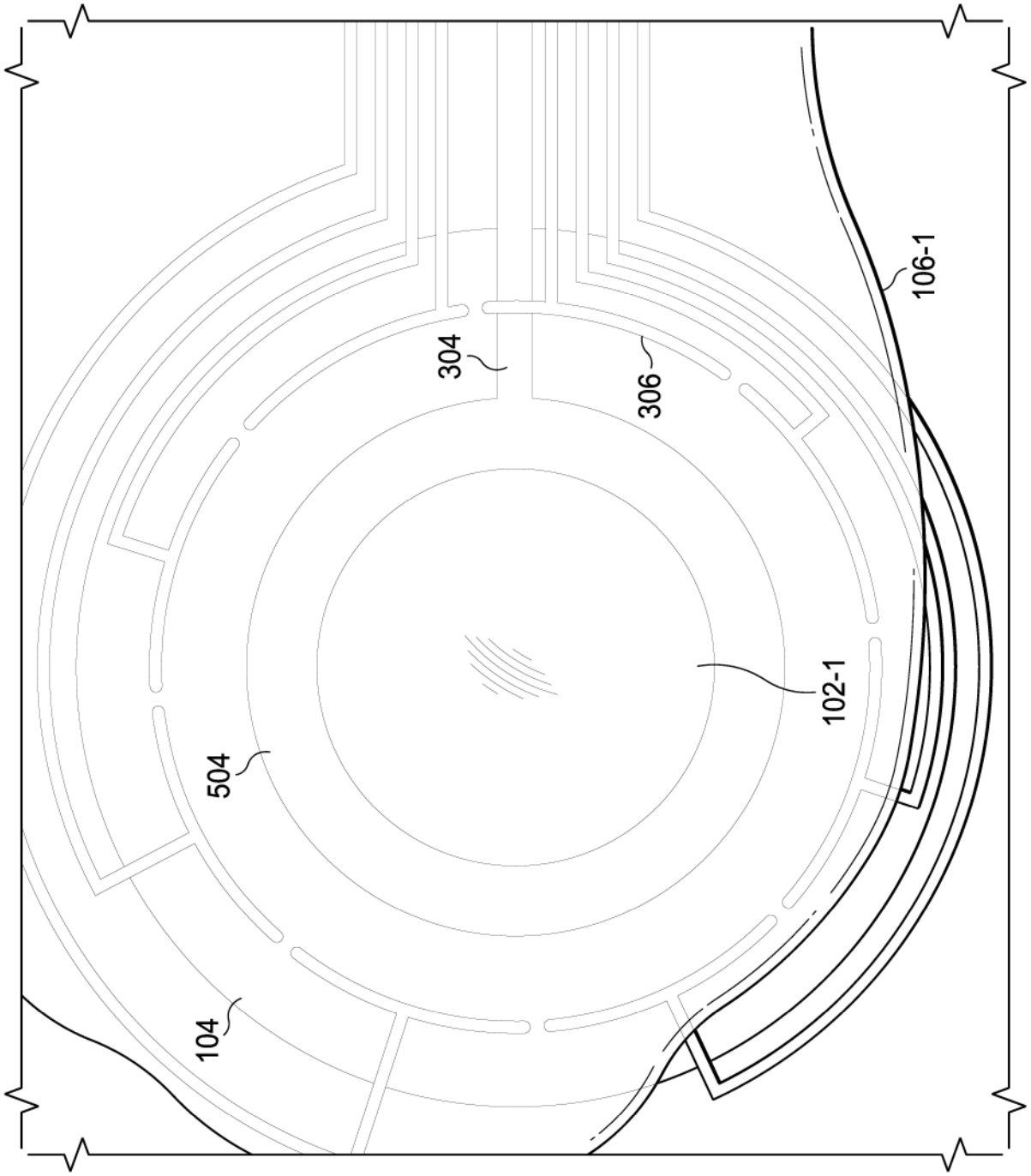

FIG. 5

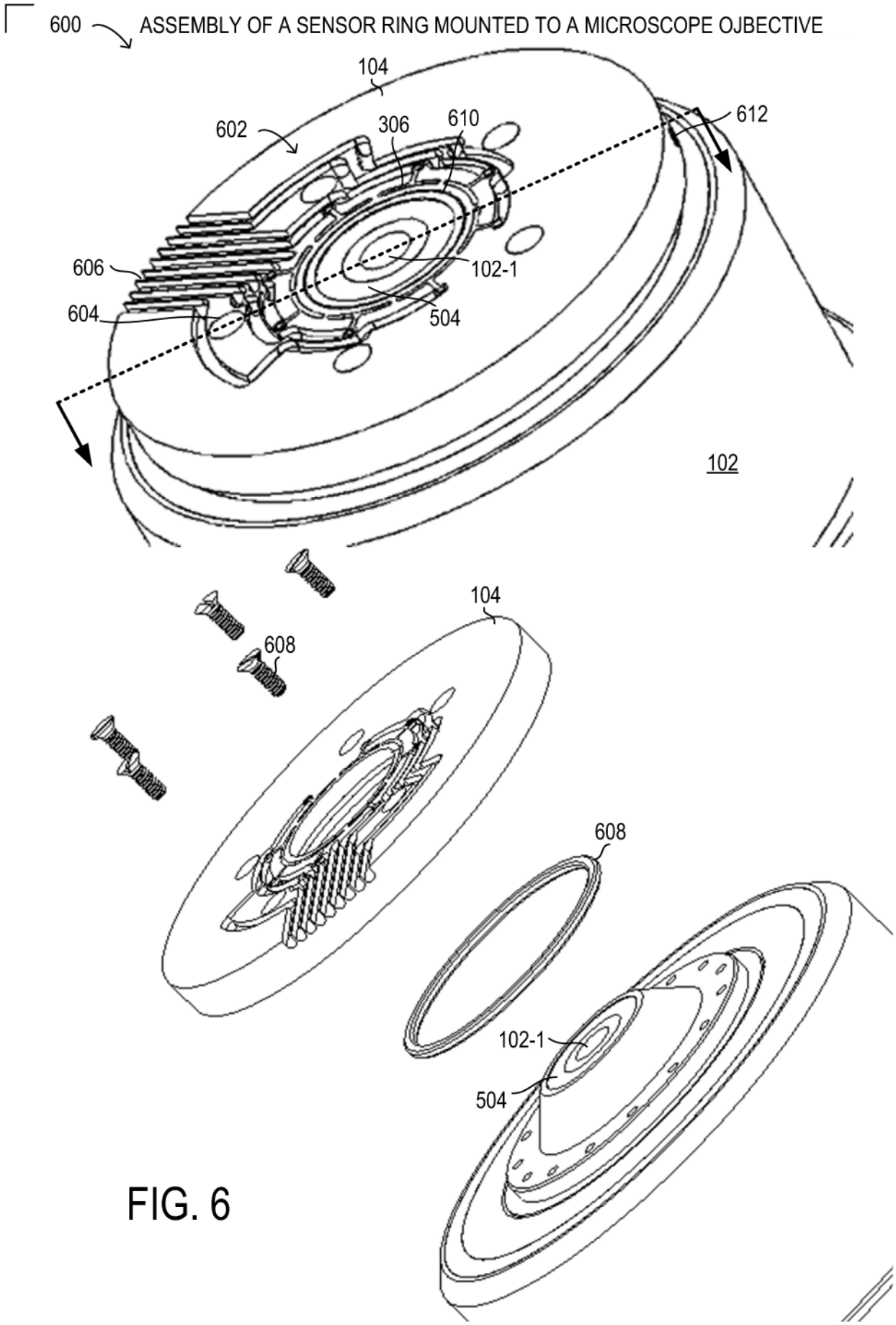
600
ASSEMBLY OF A SENSOR RING MOUNTED TO A MICROSCOPE OJBECTIVE
104
602
306
610
612
606
102-1
604
504
102
104
608
608
102-1
504

FIG. 6

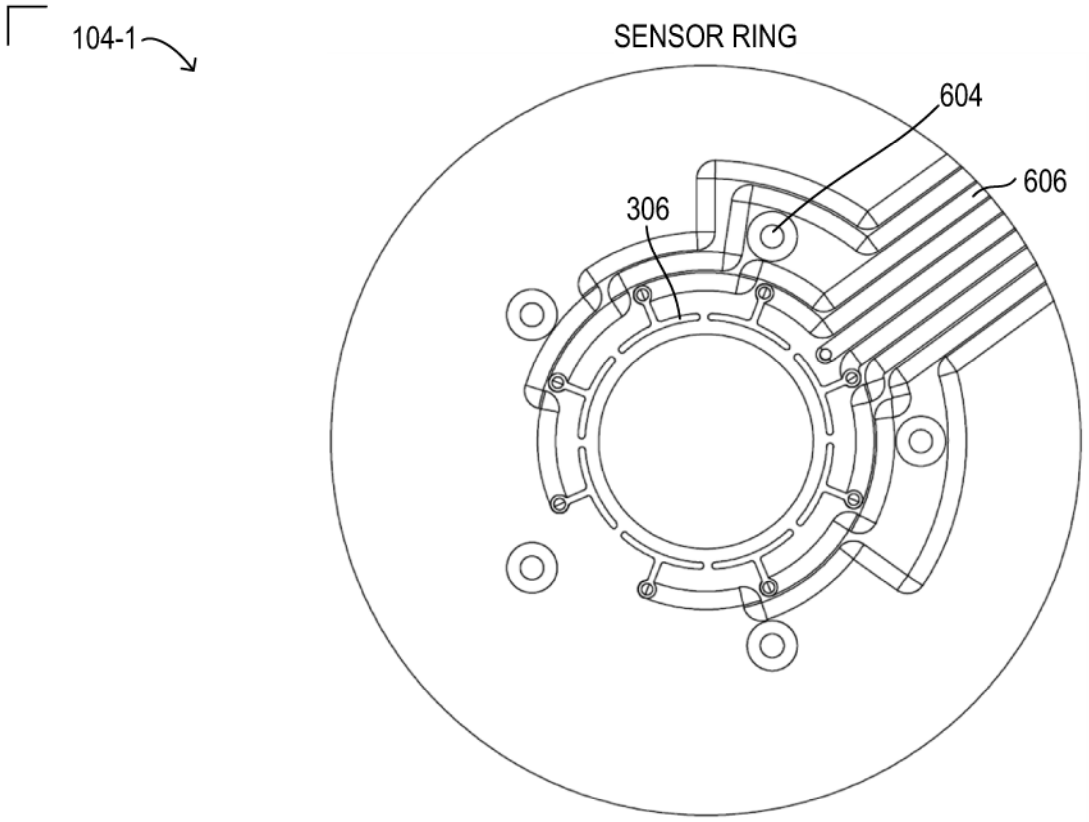

FIG. 7

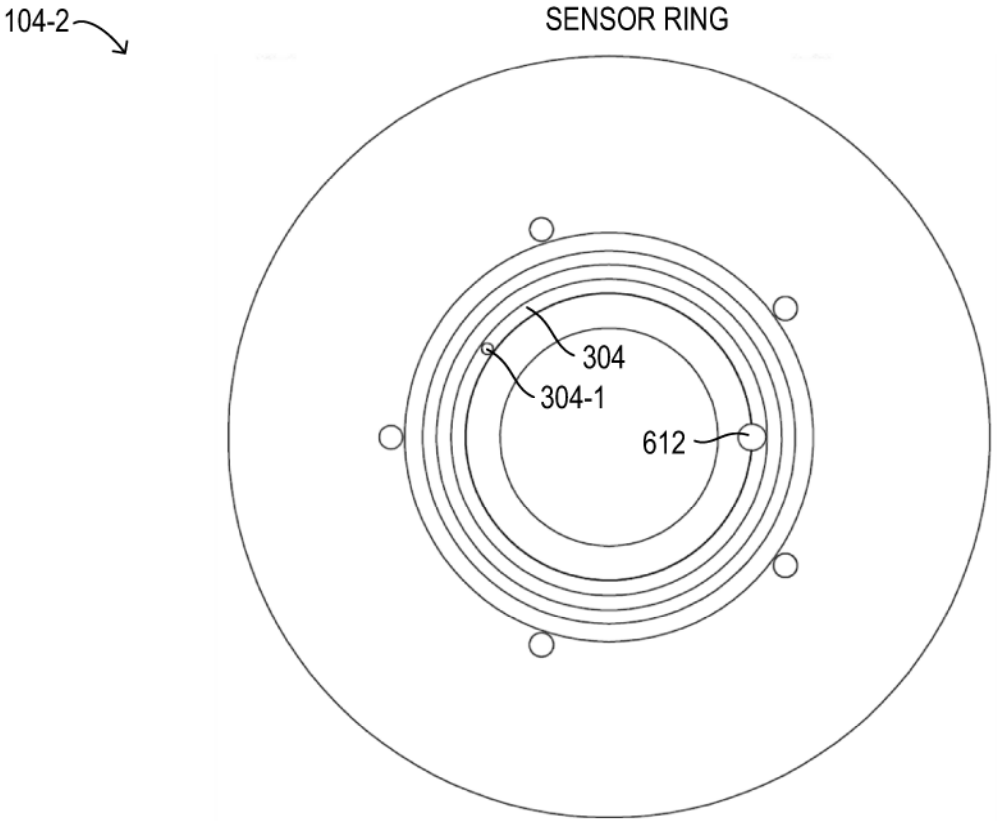

FIG. 8

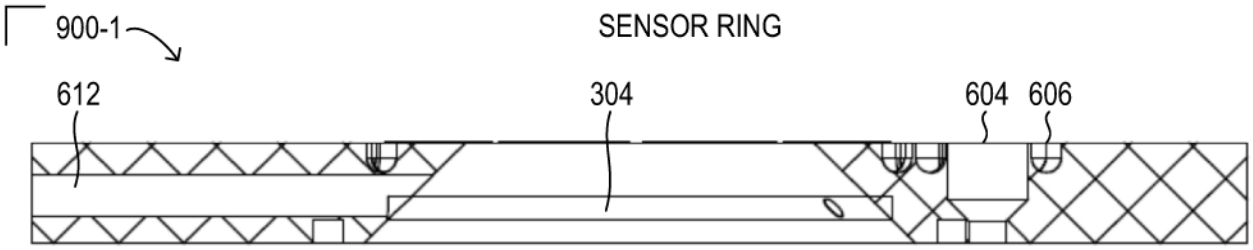
900-1
SENSOR RING
612
304
604
606

FIG. 9

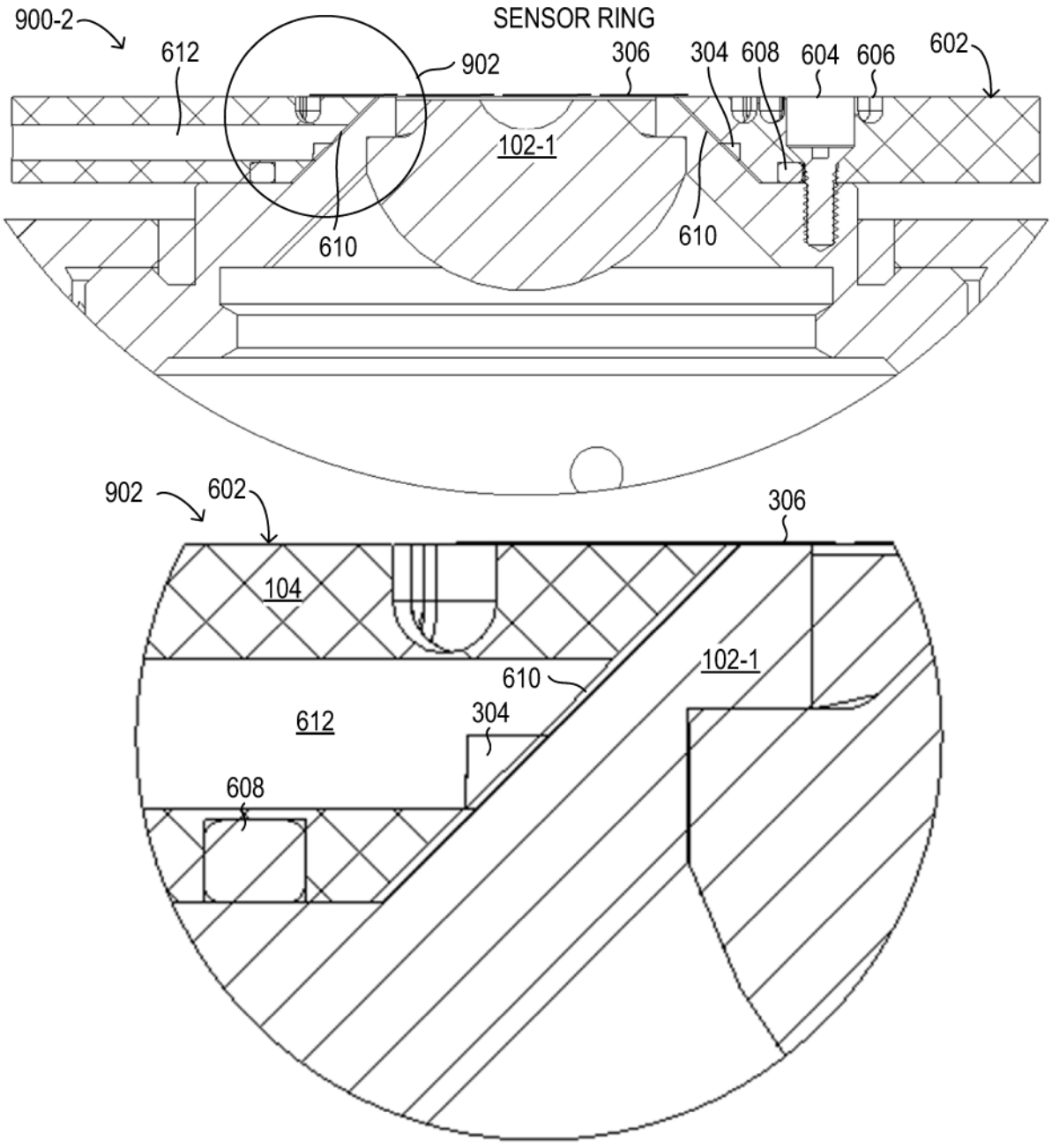
900-2
SENSOR RING
612
902
306
304
608
604
606
602
102-1
610
610
902
602
306
104
102-1
610
612
304
608

FIG. 10

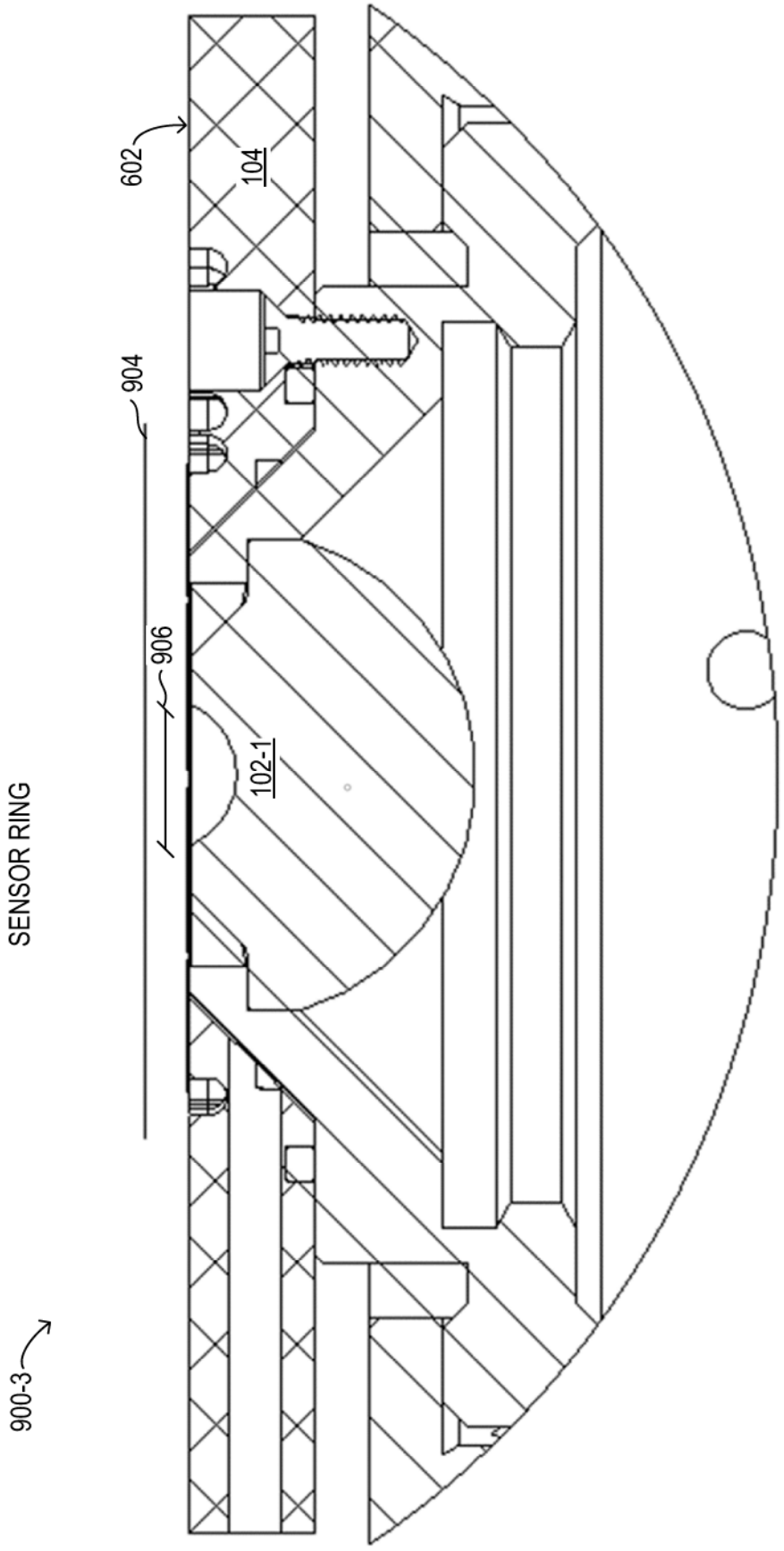

FIG. 11

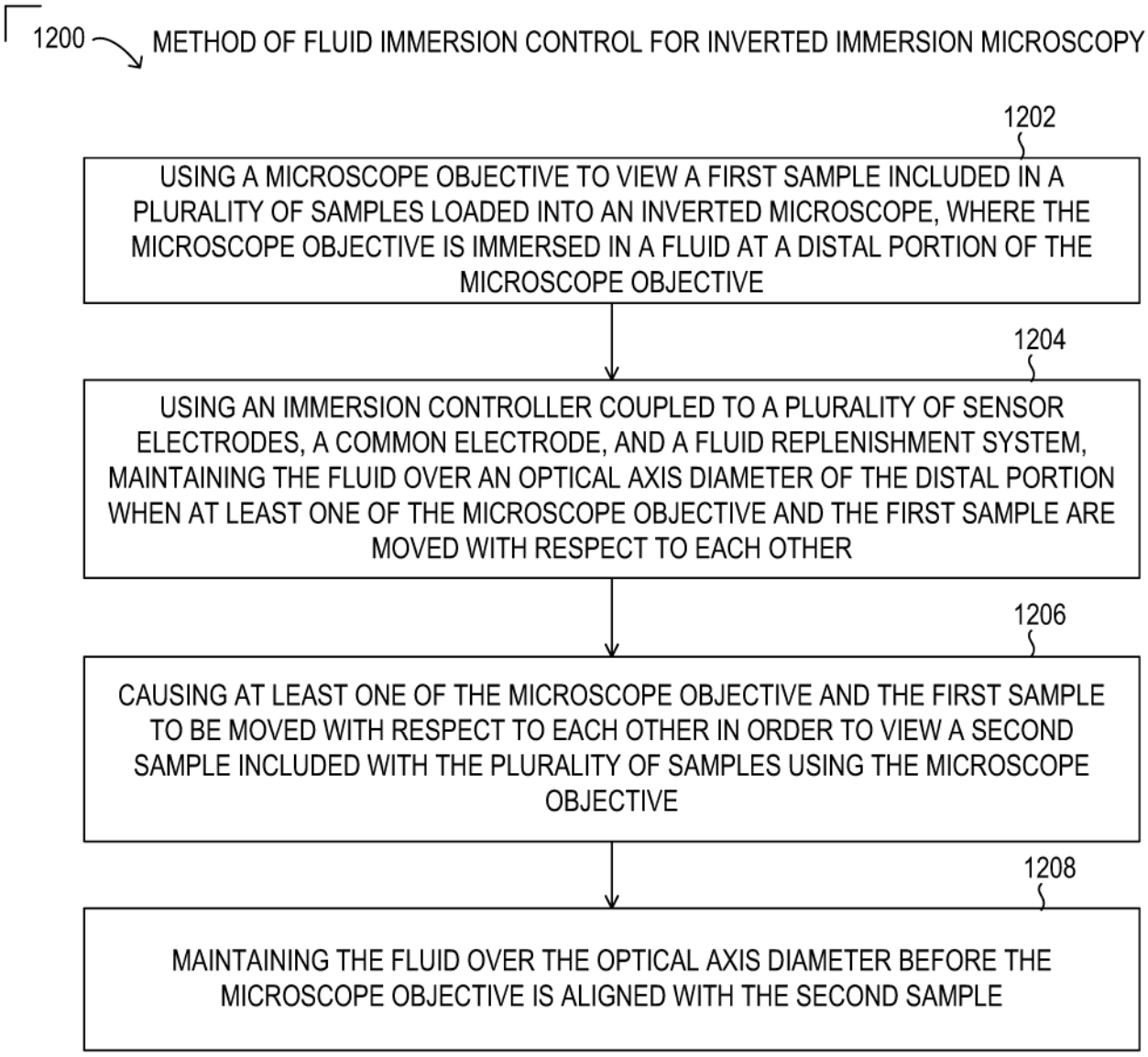
1200
METHOD OF FLUID IMMERSION CONTROL FOR INVERTED IMMERSION MICROSCOPY
1202
USING A MICROSCOPE OBJECTIVE TO VIEW A FIRST SAMPLE INCLUDED IN A PLURALITY OF SAMPLES LOADED INTO AN INVERTED MICROSCOPE, WHERE THE MICROSCOPE OBJECTIVE IS IMMERSED IN A FLUID AT A DISTAL PORTION OF THE MICROSCOPE OBJECTIVE
1204
USING AN IMMERSION CONTROLLER COUPLED TO A PLURALITY OF SENSOR ELECTRODES, A COMMON ELECTRODE, AND A FLUID REPLENISHMENT SYSTEM, MAINTAINING THE FLUID OVER AN OPTICAL AXIS DIAMETER OF THE DISTAL PORTION WHEN AT LEAST ONE OF THE MICROSCOPE OBJECTIVE AND THE FIRST SAMPLE ARE MOVED WITH RESPECT TO EACH OTHER
1206
CAUSING AT LEAST ONE OF THE MICROSCOPE OBJECTIVE AND THE FIRST SAMPLE TO BE MOVED WITH RESPECT TO EACH OTHER IN ORDER TO VIEW A SECOND SAMPLE INCLUDED WITH THE PLURALITY OF SAMPLES USING THE MICROSCOPE OBJECTIVE
1208
MAINTAINING THE FLUID OVER THE OPTICAL AXIS DIAMETER BEFORE THE MICROSCOPE OBJECTIVE IS ALIGNED WITH THE SECOND SAMPLE

FIG. 12

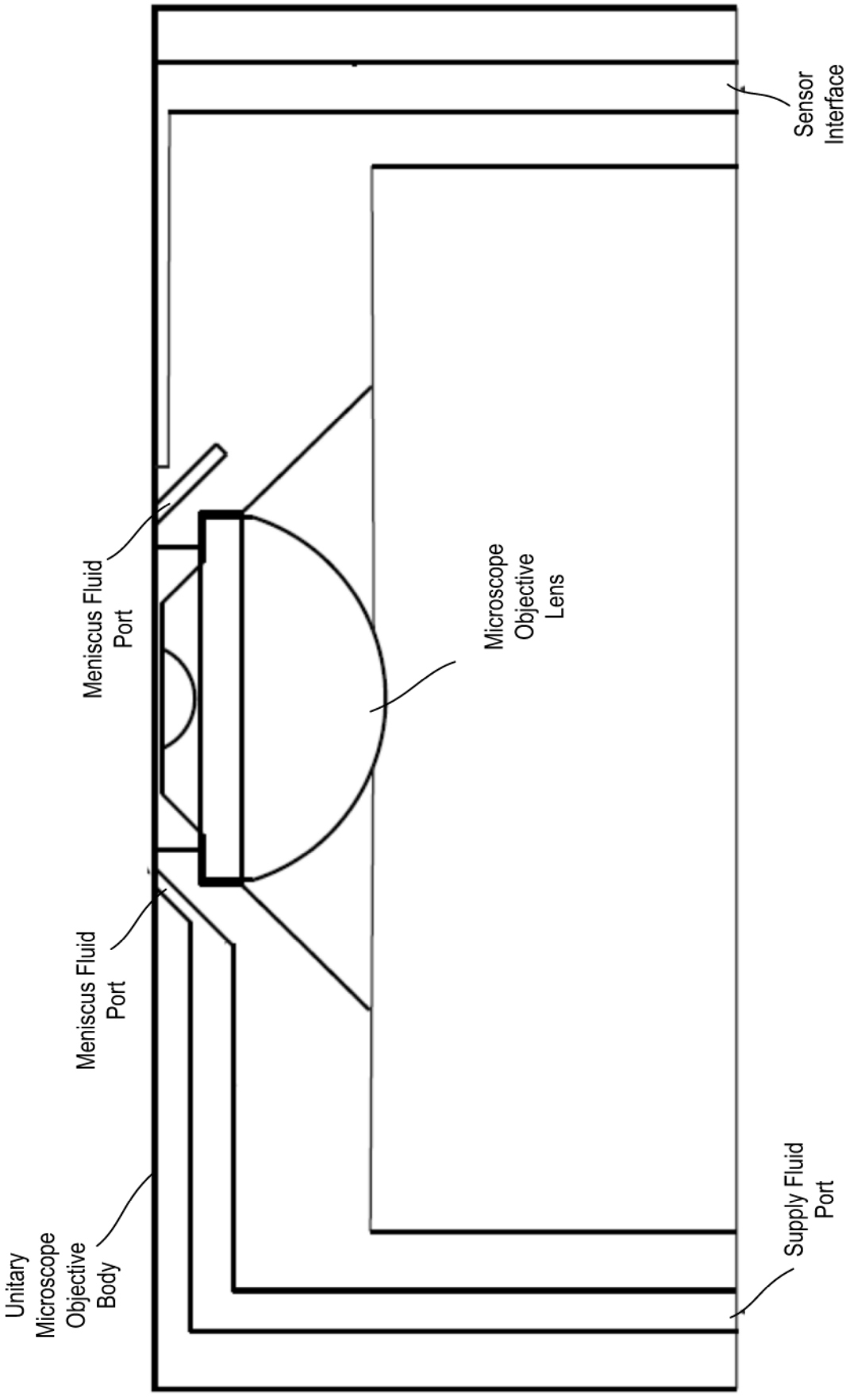
Sensor Interface
Meniscus Fluid Port
Microscope Objective Lens
Meniscus Fluid Port
Unitary Microscope Objective Body
Supply Fluid Port

FIG. 13

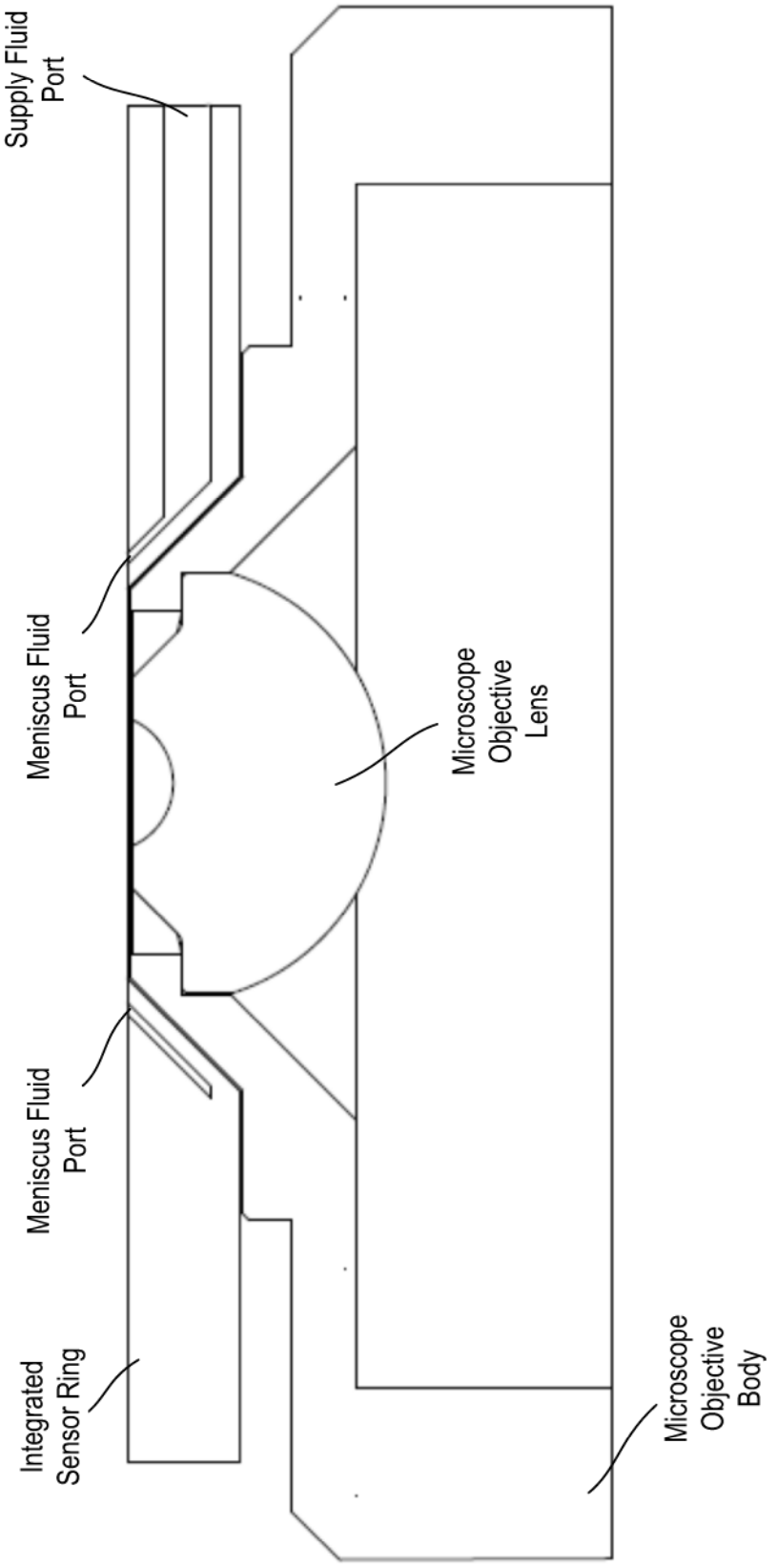
Supply Fluid Port
Meniscus Fluid Port
Meniscus Fluid Port
Integrated Sensor Ring
Microscope Objective Lens
Microscope Objective Body

FIG. 14

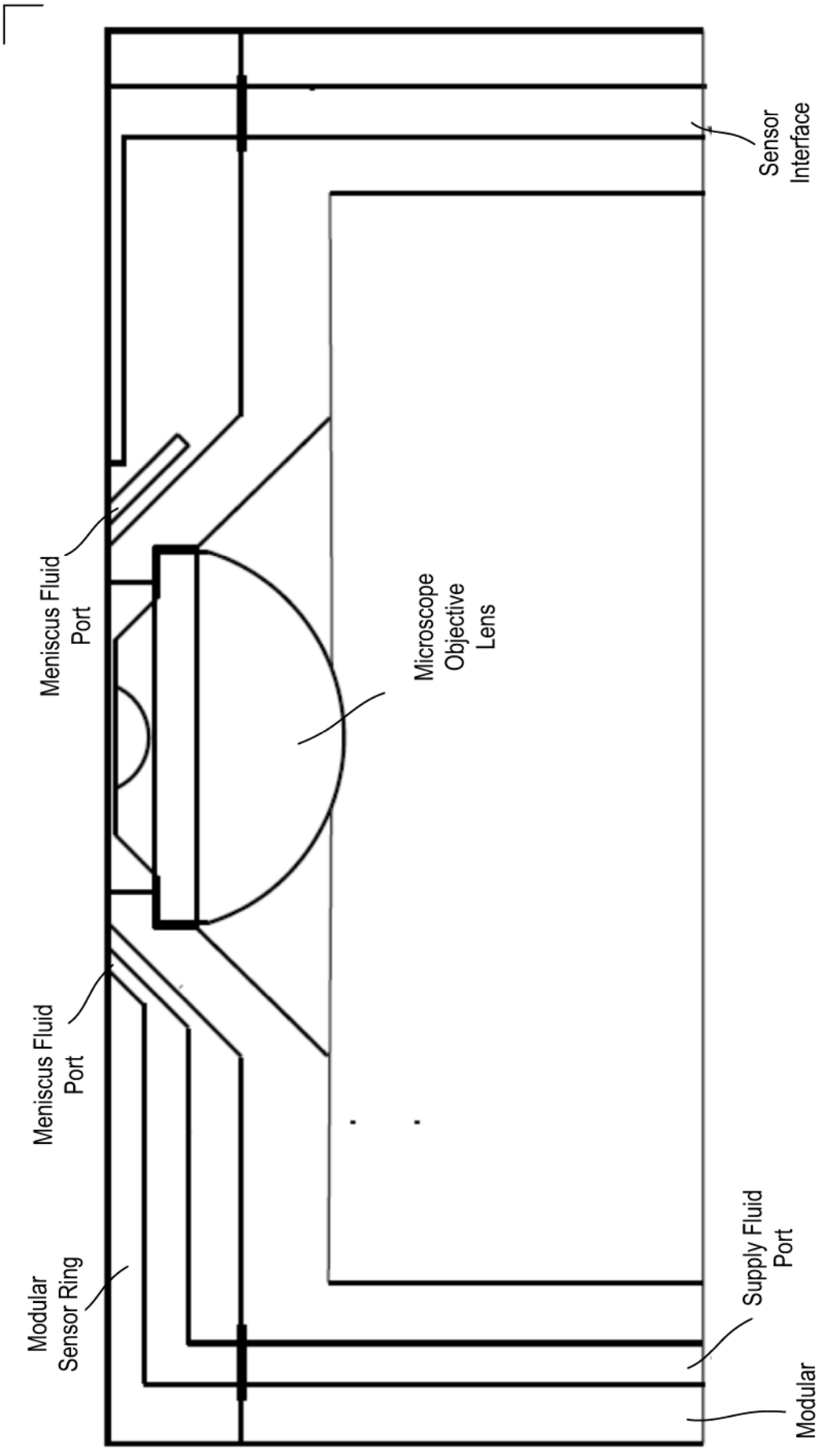
Sensor Interface
Meniscus Fluid Port
Microscope Objective Lens
Meniscus Fluid Port
Modular Sensor Ring
Supply Fluid Port
Modular Microscope Objective Body

FIG. 15