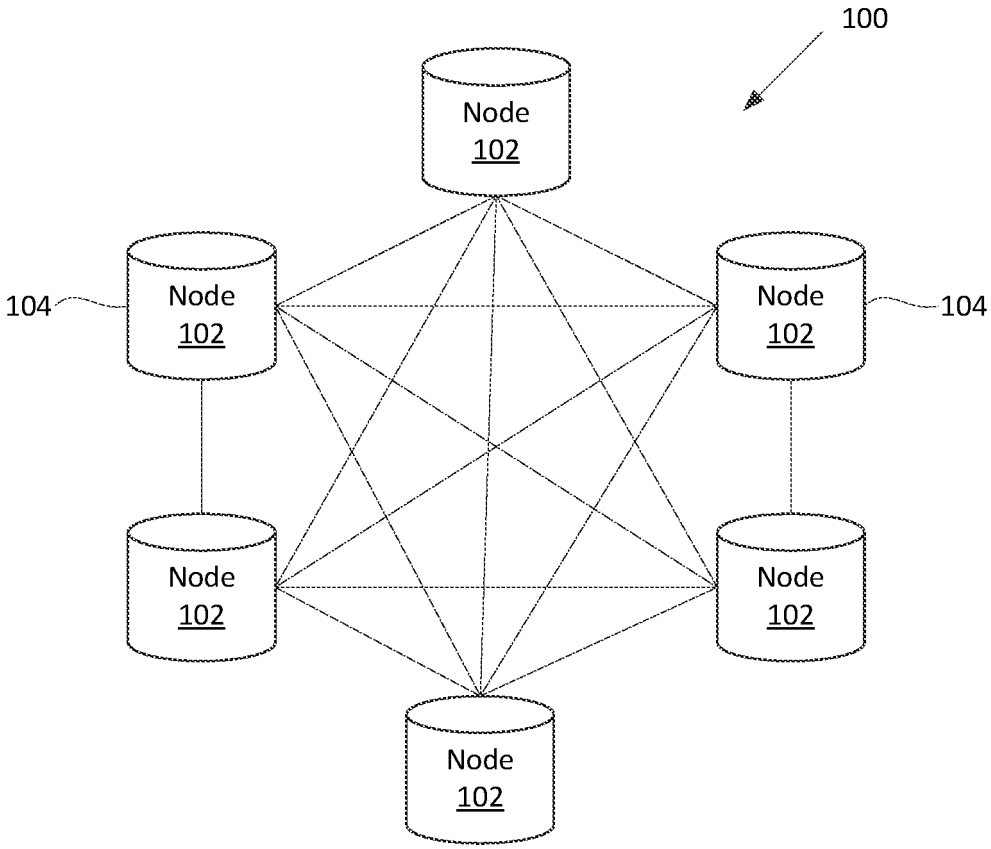
100
Node
102
Node
102
104
Node
102
104
Node
102
Node
102
Node
102

FIG. 1

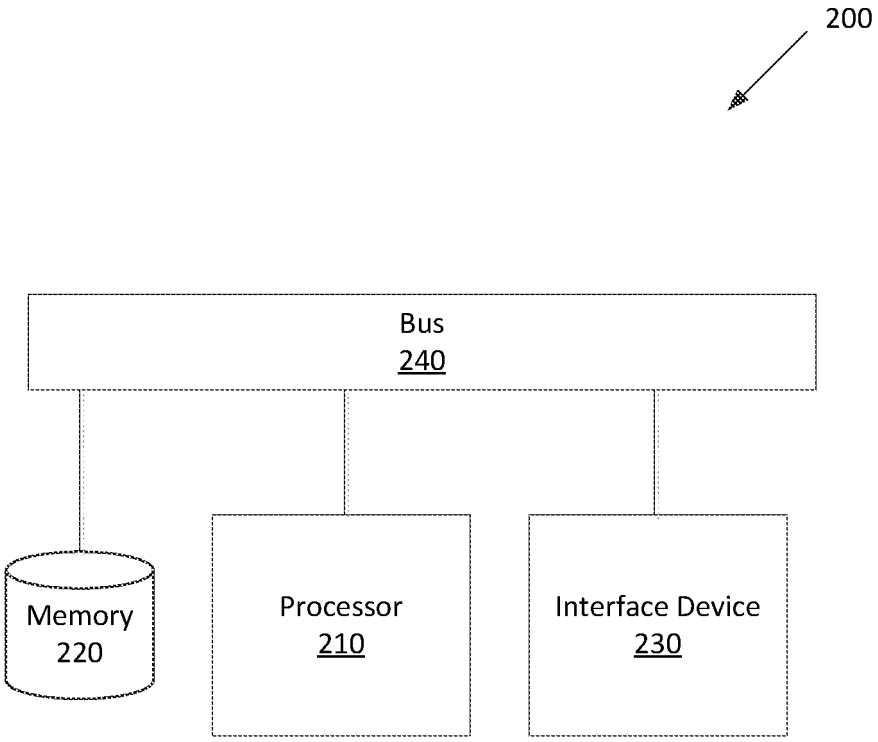

FIG. 2

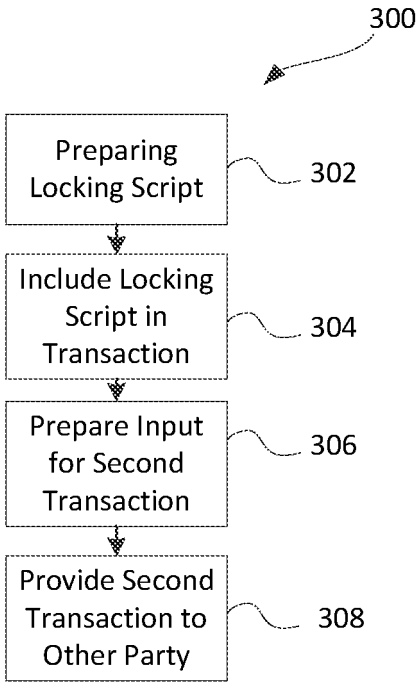
300
Preparing Locking Script
302
Include Locking Script in Transaction
304
Prepare Input for Second Transaction
306
Provide Second Transaction to Other Party
308

FIG. 3

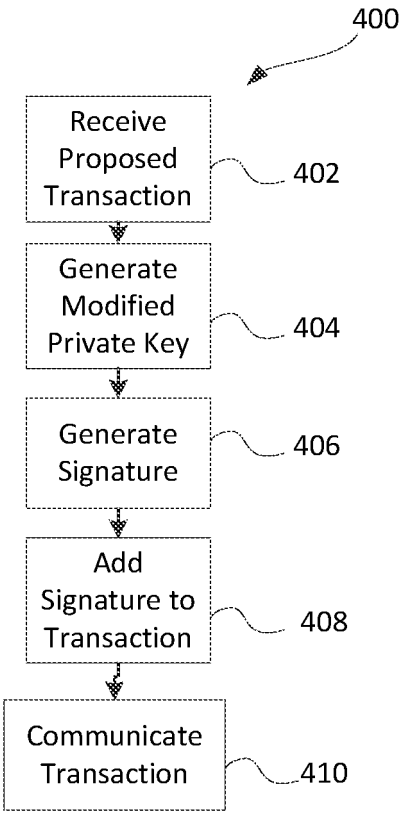
400
Receive Proposed Transaction
402
Generate Modified Private Key
404
Generate Signature
406
Add Signature to Transaction
408
Communicate Transaction
410

FIG. 4

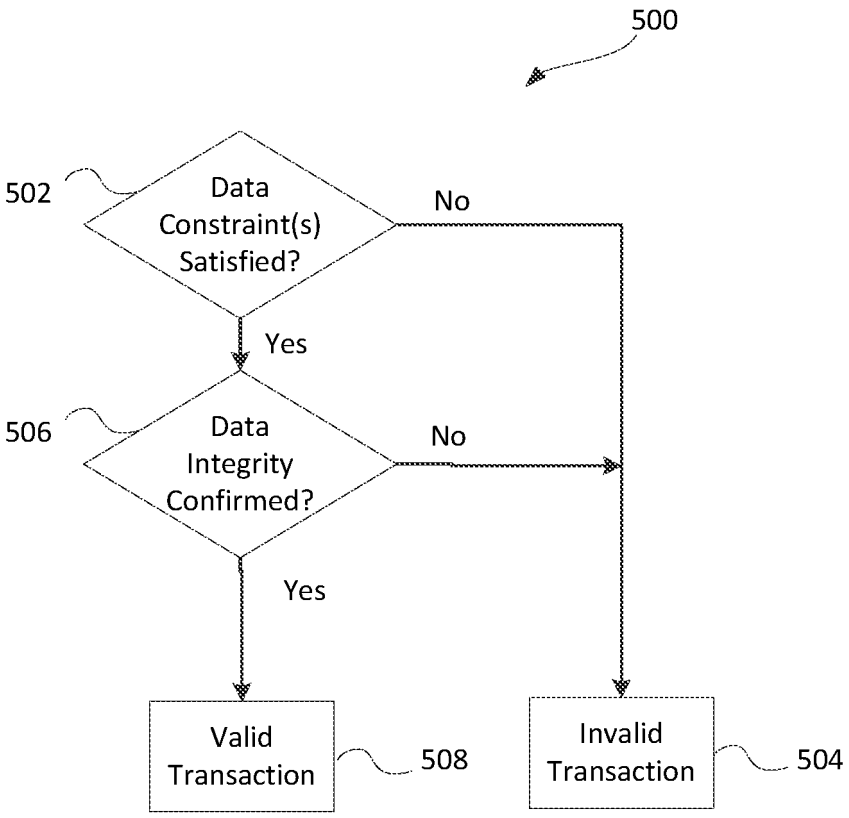
500
502
Data Constraint(s) Satisfied?
No
Yes
506
Data Integrity Confirmed?
No
Yes
Valid Transaction
508
Invalid Transaction
504

FIG. 5