(12) INTERNATIONAL APPLICATION PUBLISHED UNDER THE PATENT COOPERATION TREATY (PCT)

(19) World Intellectual Property Organization
International Bureau

(43) International Publication Date
4 October 2012 (04.10.2012)

WIPO | PCT

(10) International Publication Number
WO 2012/131562 A1

(51) International Patent Classification:
C12M 1/12 (2006.01)

(21) International Application Number:
PCT/IB2012/051424

(22) International Filing Date:
26 March 2012 (26.03.2012)

(25) Filing Language: English

(26) Publication Language: English

(30) Priority Data:
1152556 28 March 2011 (28.03.2011) FR

(71) Applicant *(for all designated States except US)*: **EMD MILLIPORE CORPORATION** [US/US]; 290 Concord Road, Billerica, Massachusetts 01821 (US).

(72) Inventors; and

(75) Inventors/Applicants *(for US only)*: **REINBIGLER, René** [FR/FR]; 13 rue de Westhoffen, F-67520 Kirchheim (FR). **WEISSENBACH, Jean-Louis** [FR/FR]; 16 rue du Soleil, F-67220 Ville (FR). **DELBOS, Cécile** [FR/FR]; 2 sentier de l'Ecluse, F-67114 Eschau (FR).

(74) Agent: **SANTARELLI**; BP 237, 14 avenue de la Grande Armée, F-75822 Paris Cedex 17 (FR).

(81) Designated States *(unless otherwise indicated, for every kind of national protection available)*: AE, AG, AL, AM, AO, AT, AU, AZ, BA, BB, BG, BH, BR, BW, BY, BZ, CA, CH, CL, CN, CO, CR, CU, CZ, DE, DK, DM, DO, DZ, EC, EE, EG, ES, FI, GB, GD, GE, GH, GM, GT, HN, HR, HU, ID, IL, IN, IS, JP, KE, KG, KM, KN, KP, KR, KZ, LA, LC, LK, LR, LS, LT, LU, LY, MA, MD, ME, MG, MK, MN, MW, MX, MY, MZ, NA, NG, NI, NO, NZ, OM, PE, PG, PH, PL, PT, QA, RO, RS, RU, RW, SC, SD, SE, SG, SK, SL, SM, ST, SV, SY, TH, TJ, TM, TN, TR, TT, TZ, UA, UG, US, UZ, VC, VN, ZA, ZM, ZW.

(84) Designated States *(unless otherwise indicated, for every kind of regional protection available)*: ARIPO (BW, GH, GM, KE, LR, LS, MW, MZ, NA, RW, SD, SL, SZ, TZ, UG, ZM, ZW), Eurasian (AM, AZ, BY, KG, KZ, MD, RU, TJ, TM), European (AL, AT, BE, BG, CH, CY, CZ, DE, DK, EE, ES, FI, FR, GB, GR, HR, HU, IE, IS, IT, LT, LU, LV, MC, MK, MT, NL, NO, PL, PT, RO, RS, SE, SI, SK, SM, TR), OAPI (BF, BJ, CF, CG, CI, CM, GA, GN, GQ, GW, ML, MR, NE, SN, TD, TG).

Declarations under Rule 4.17:

— *of inventorship (Rule 4.17(iv))*

Published:

— *with international search report (Art. 21(3))*

— *before the expiration of the time limit for amending the claims and to be republished in the event of receipt of amendments (Rule 48.2(h))*

(54) **Title**: INSTALLATION FOR TREATING A BIOLOGICAL LIQUID

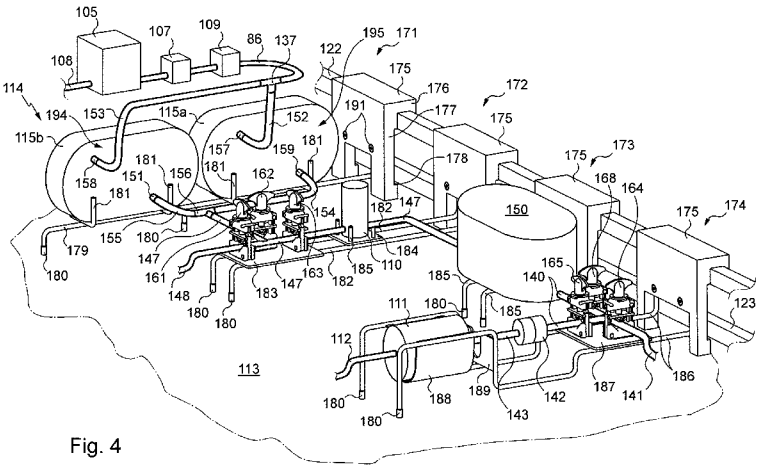

Fig. 4

(57) **Abstract**: The invention concerns an installation for treating biological liquid comprising a platform provided with an edge running front-to-back, a pump (105), a filtration assembly (111, 150), a pre-filtration assembly (114) having an inlet point and an outlet point respectively belonging to first and second T-shaped branching connectors (137, 156), two pre-filtration components (115a, 115b) aligned in a front-to-back direction on said platform along said front-to-back edge and each provided with inlet (157, 158) and outlet (159, 151) nozzles, said installation comprising first and second conduits (152, 153) connected to said first T-shaped connector and respectively to said inlet nozzles and third and fourth conduits (154, 155) connected to said second T-shaped connector and respectively to said outlet nozzles (159, 151), which inlet and outlet nozzles and conduits are on an opposite side of said pre-filtration components (105) to said front-to- back edge of said platform.

WO 2012/131562 A1