(12) INTERNATIONAL APPLICATION PUBLISHED UNDER THE PATENT COOPERATION TREATY (PCT)

(19) World Intellectual Property Organization
International Bureau

(43) International Publication Date
10 June 2010 (10.06.2010)

PCT

(10) International Publication Number
WO 2010/065138 A1

(51) International Patent Classification:
B01L 3/02 (2006.01)

(21) International Application Number:
PCT/US2009/006397

(22) International Filing Date:
4 December 2009 (04.12.2009)

(25) Filing Language: English

(26) Publication Language: English

(30) Priority Data:
61/200,814 4 December 2008 (04.12.2008) US

(71) Applicant *(for all designated States except US)*: **ALLTECH ASSOCIATES INC.** [US/US]; 7500 Grace Drive, Columbia, Maryland 21044 (US).

(72) Inventors; and

(75) Inventors/Applicants *(for US only)*: **PICHA, Neil, R.** [US/US]; 1643 Calle Ranchero, Petaluma, California 94954 (US). **BLACK, Bruce, D.** [US/US]; 1330 Cayetano Drive, Napa, California 94559 (US). **ANDERSON, James, M., Jr.** [US/US]; 2526 East Hunter Drive, Arlington Heights, Illinois 60004 (US). **MENDOZA, Washington, J.** [US/US]; 3 Sonoma Court, Lake in the Hills, Illinois 60156 (US). **SARRI-NORDHAUS, Raaidah** [MY/US]; 709 Birch Hollow Drive, Antioch, Illinois 60002 (US). **BYSTRON, Jo,ef P.** [US/US]; 5809 N. Kenton, Chicago, Illinois 60646 (US). **OLSEN, Christine, A.** [US/US]; P.O. Box 284, W 7080 Islandlake Road, Wausaukee, Wisconsin 54177 (US). **POPPE, Carl, H.** [US/US]; 7571 Meadowlark Drive, Sebastopol, California 95472 (US).

(74) Agent: **BUNCH, William, D.**; 7500 Grace Drive, Columbia, MD 21044 (US).

(81) Designated States *(unless otherwise indicated, for every kind of national protection available)*: AE, AG, AL, AM, AO, AT, AU, AZ, BA, BB, BG, BH, BR, BW, BY, BZ, CA, CH, CL, CN, CO, CR, CU, CZ, DE, DK, DM, DO, DZ, EC, EE, EG, ES, FI, GB, GD, GE, GH, GM, GT, HN, HR, HU, ID, IL, IN, IS, JP, KE, KG, KM, KN, KP, KR, KZ, LA, LC, LK, LR, LS, LT, LU, LY, MA, MD, ME, MG, MK, MN, MW, MX, MY, MZ, NA, NG, NI, NO, NZ, OM, PE, PG, PH, PL, PT, RO, RS, RU, SC, SD, SE, SG, SK, SL, SM, ST, SV, SY, TJ, TM, TN, TR, TT, TZ, UA, UG, US, UZ, VC, VN, ZA, ZM, ZW.

(84) Designated States *(unless otherwise indicated, for every kind of regional protection available)*: ARIPO (BW, GH, GM, KE, LS, MW, MZ, NA, SD, SL, SZ, TZ, UG, ZM, ZW), Eurasian (AM, AZ, BY, KG, KZ, MD, RU, TJ, TM), European (AT, BE, BG, CH, CY, CZ, DE, DK, EE, ES, FI, FR, GB, GR, HR, HU, IE, IS, IT, LT, LU, LV,

[Continued on next page]

(54) Title: METHODS AND APPARATUS FOR MOVING ALIQUOT SAMPLES OF FLUID

(57) Abstract: Methods and apparatus for moving aliquot samples of fluid using a shuttle valve are disclosed.

FIG. 1

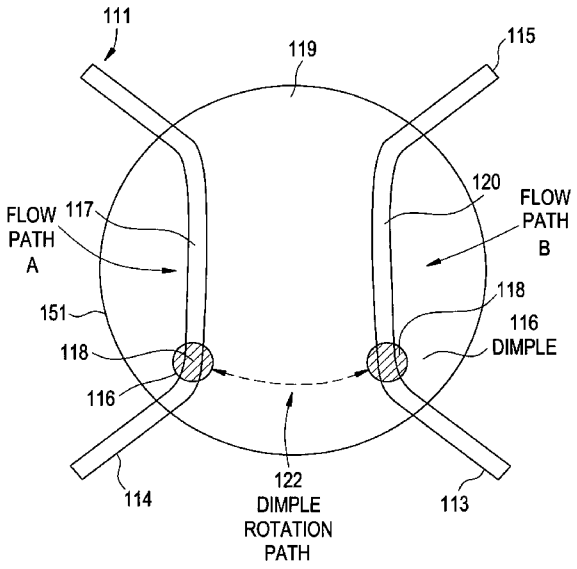

WO 2010/065138 A1

MC, MK, MT, NL, NO, PL, PT, RO, SE, SI, SK, SM, TR), OAPI (BF, BJ, CF, CG, CI, CM, GA, GN, GQ, GW, ML, MR, NE, SN, TD, TG).

Published:

— *with international search report (Art. 21(3))*