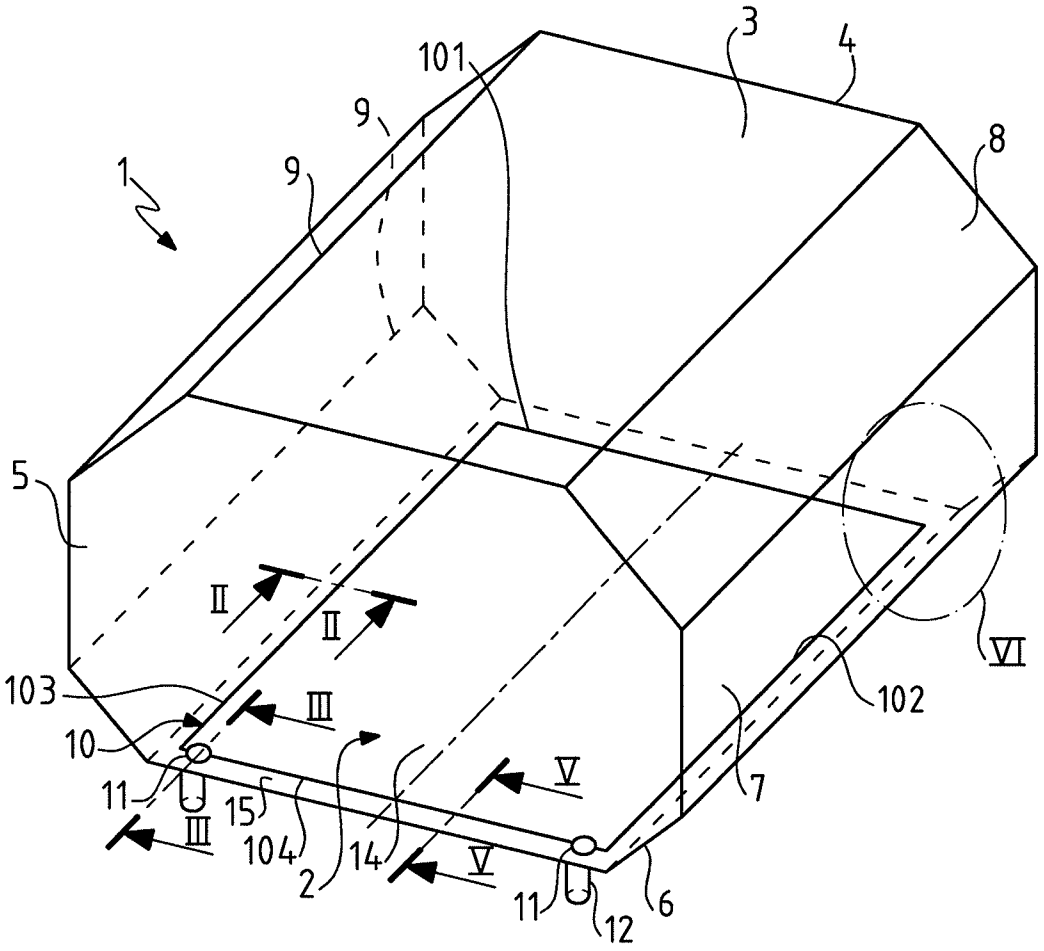
1
2
3
4
5
6
7
8
9
9
10
11
11
12
14
15
101
102
103
104
II
II
III
III
V
V
VI

FIG.1

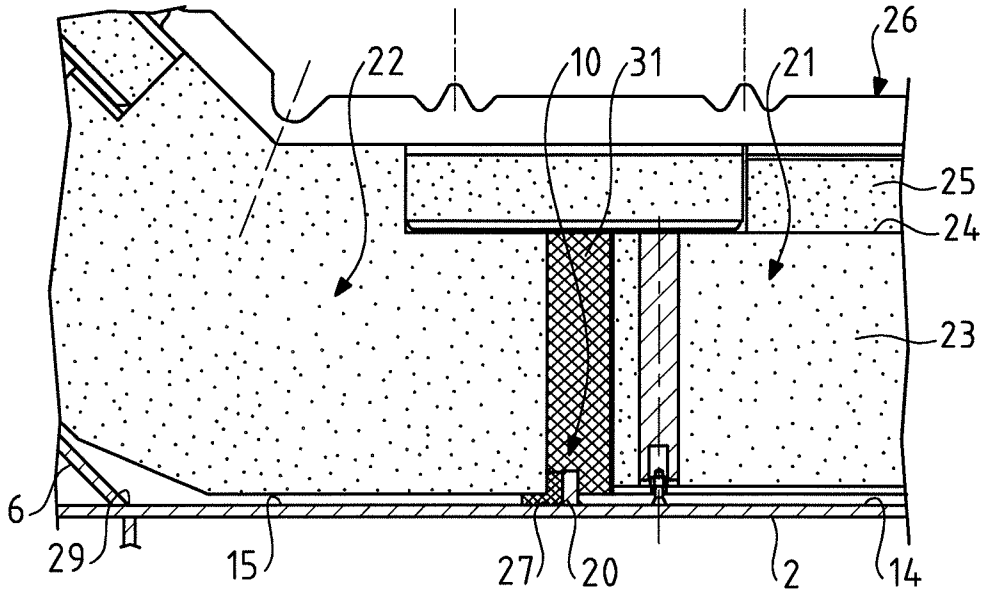
2
6
10
14
15
20
21
22
23
24
25
26
27
29
31

FIG.2

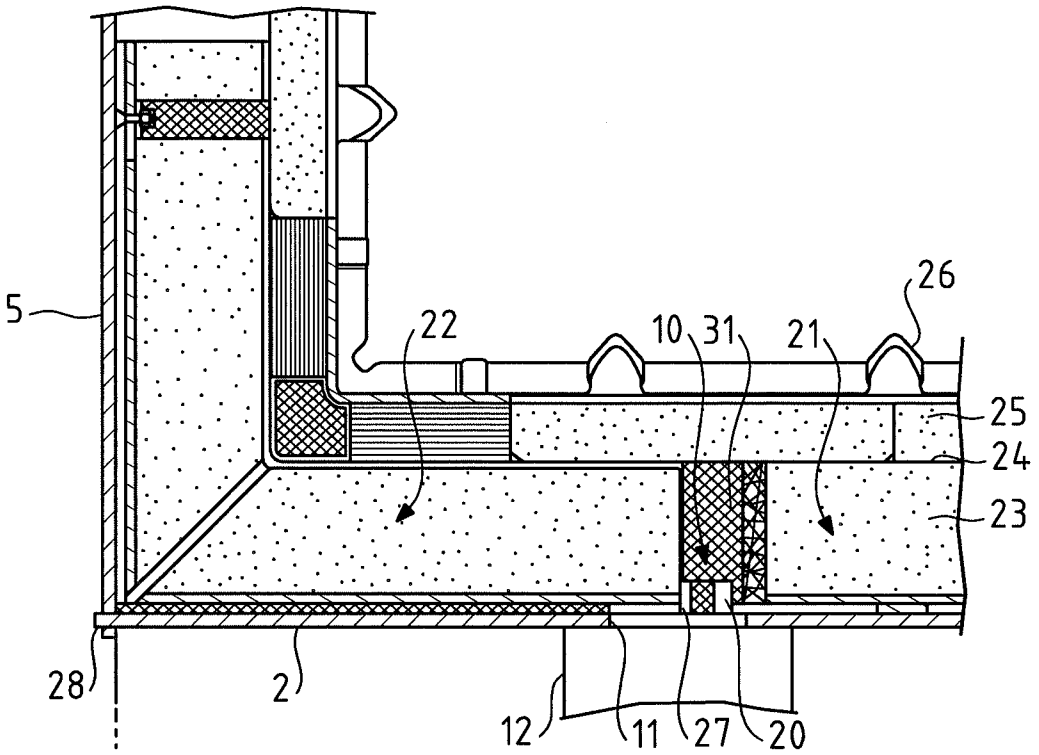
5
22
10
31
21
26
25
24
23
28
2
12
11
27
20

FIG.3

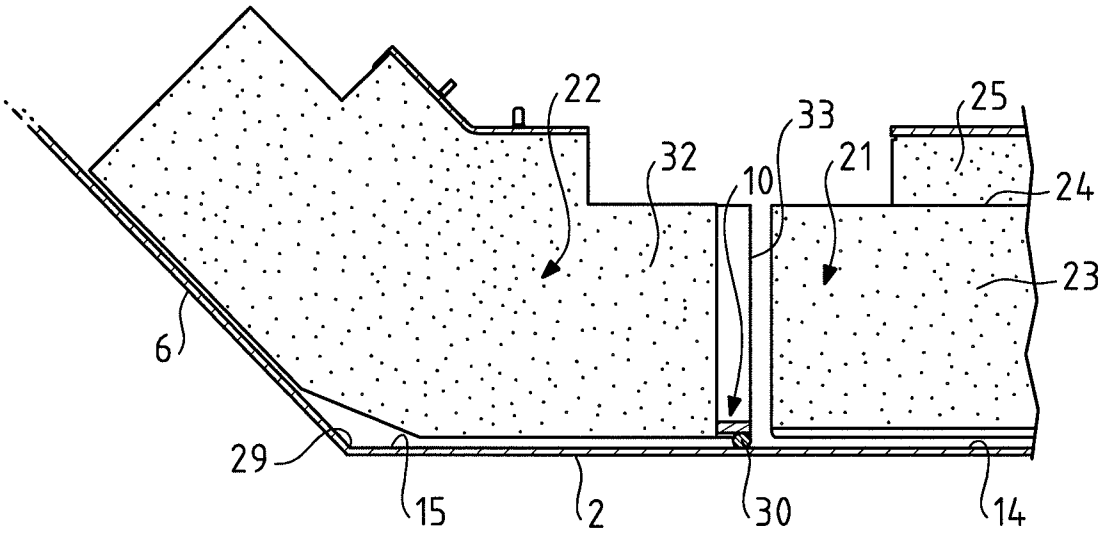
22
33
25
32
10
21
24
23
6
29
15
2
30
14

FIG.4

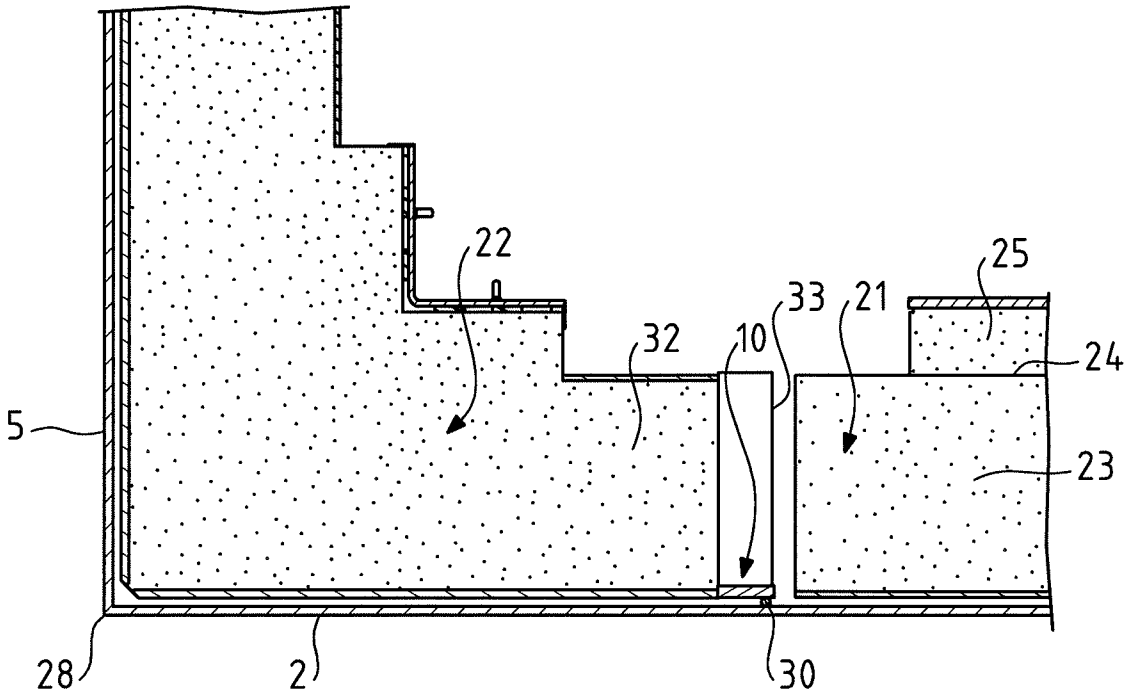
22
25
33
21
32
10
24
5
23
28
2
30

FIG.5

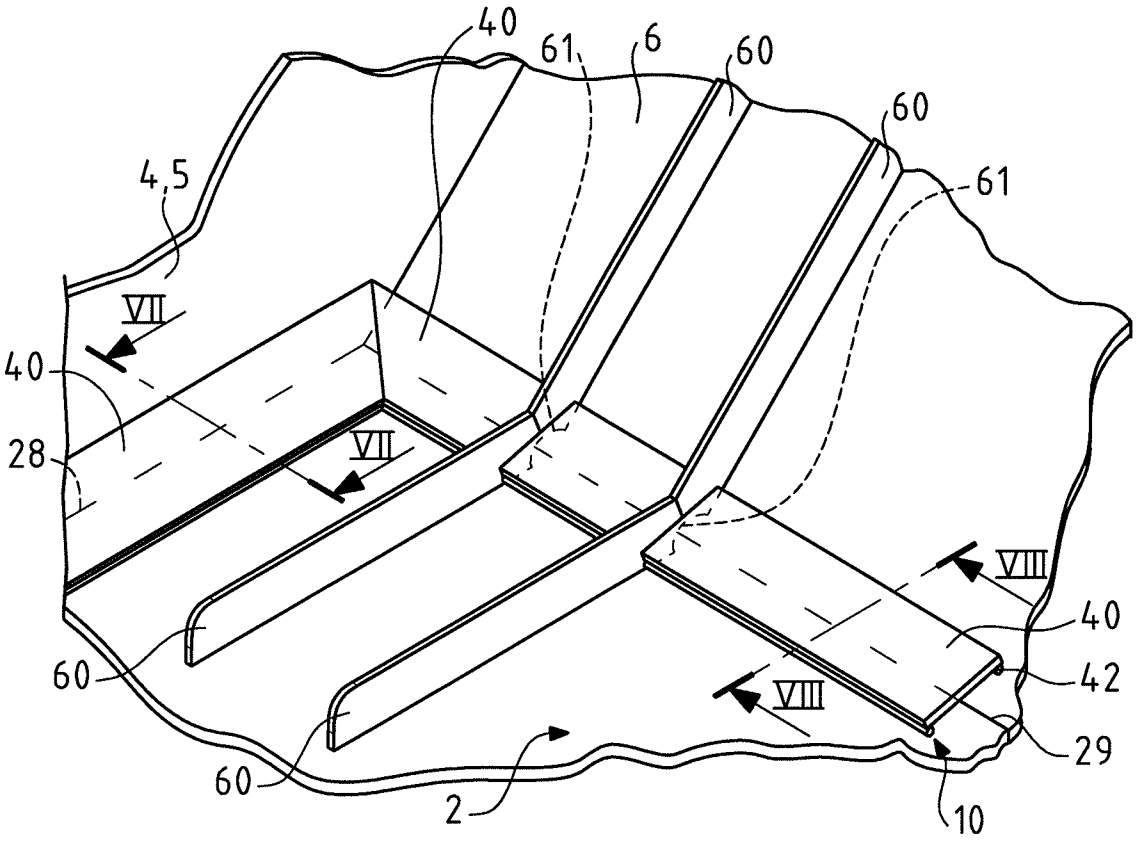
40
61
6
60
60
45
61
VII
40
28
VII
VIII
40
60
42
VIII
29
60
2
10

FIG.6

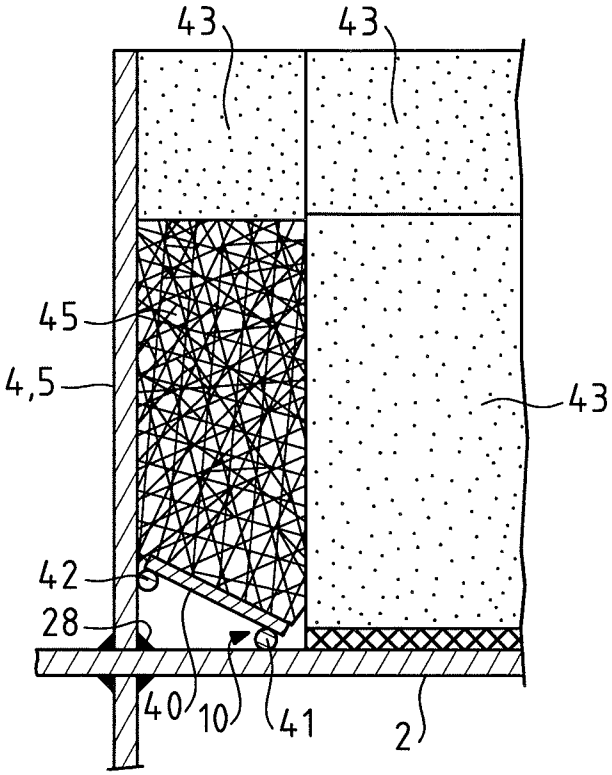

FIG.7

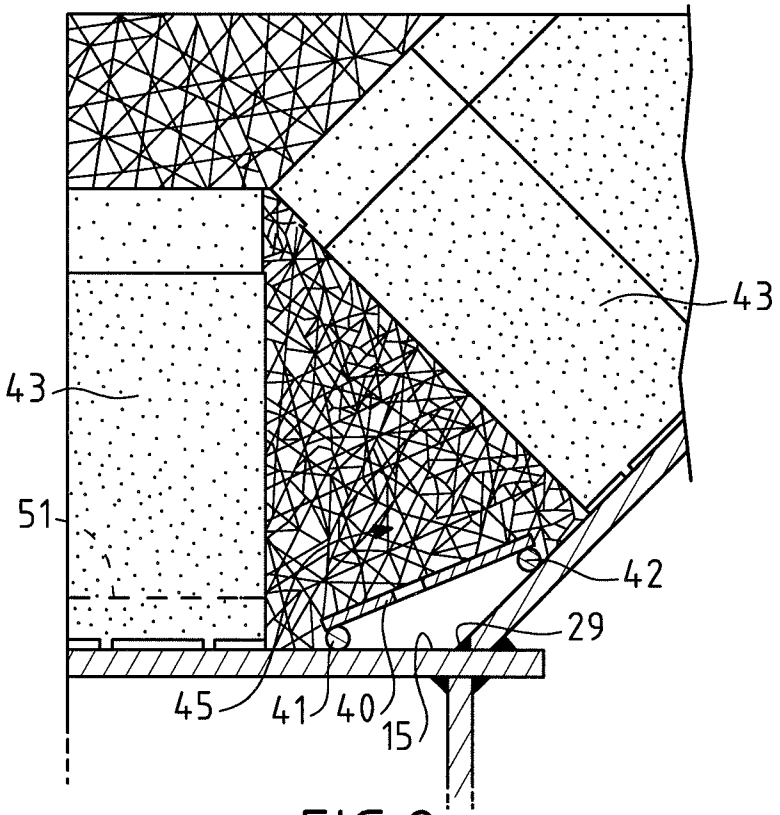

FIG.8

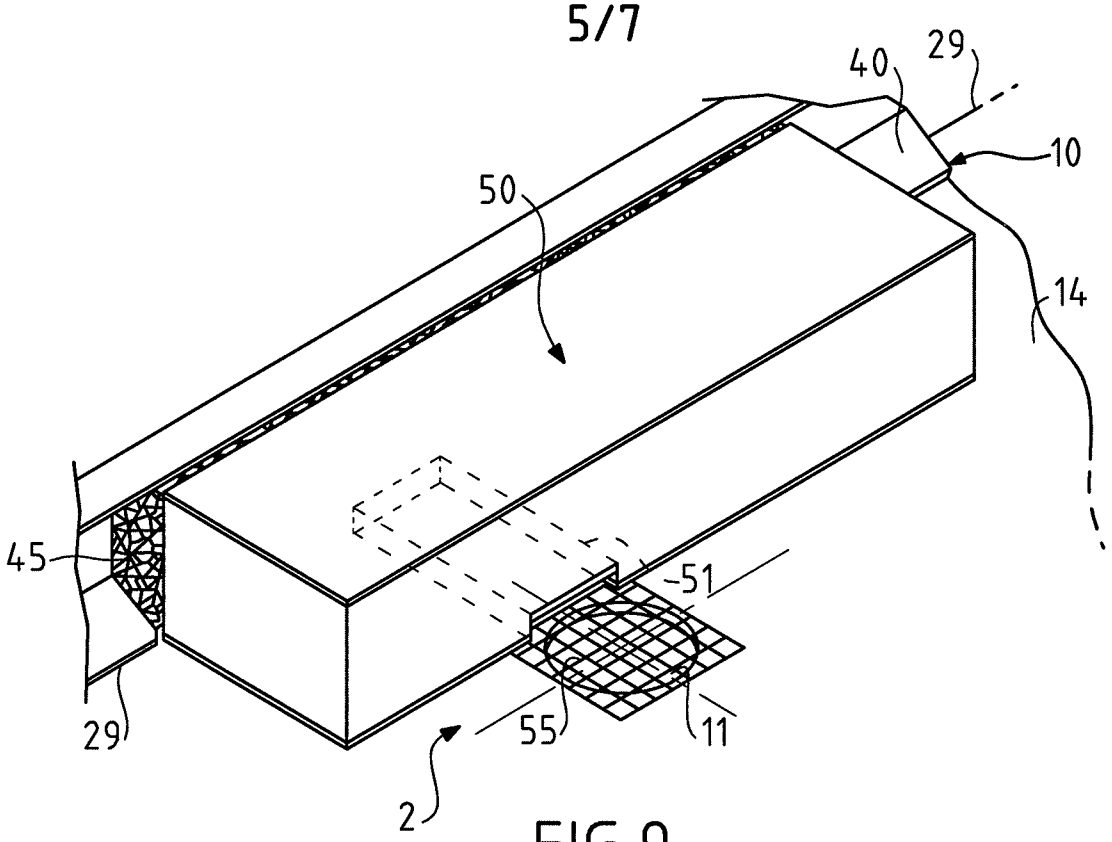

FIG.9

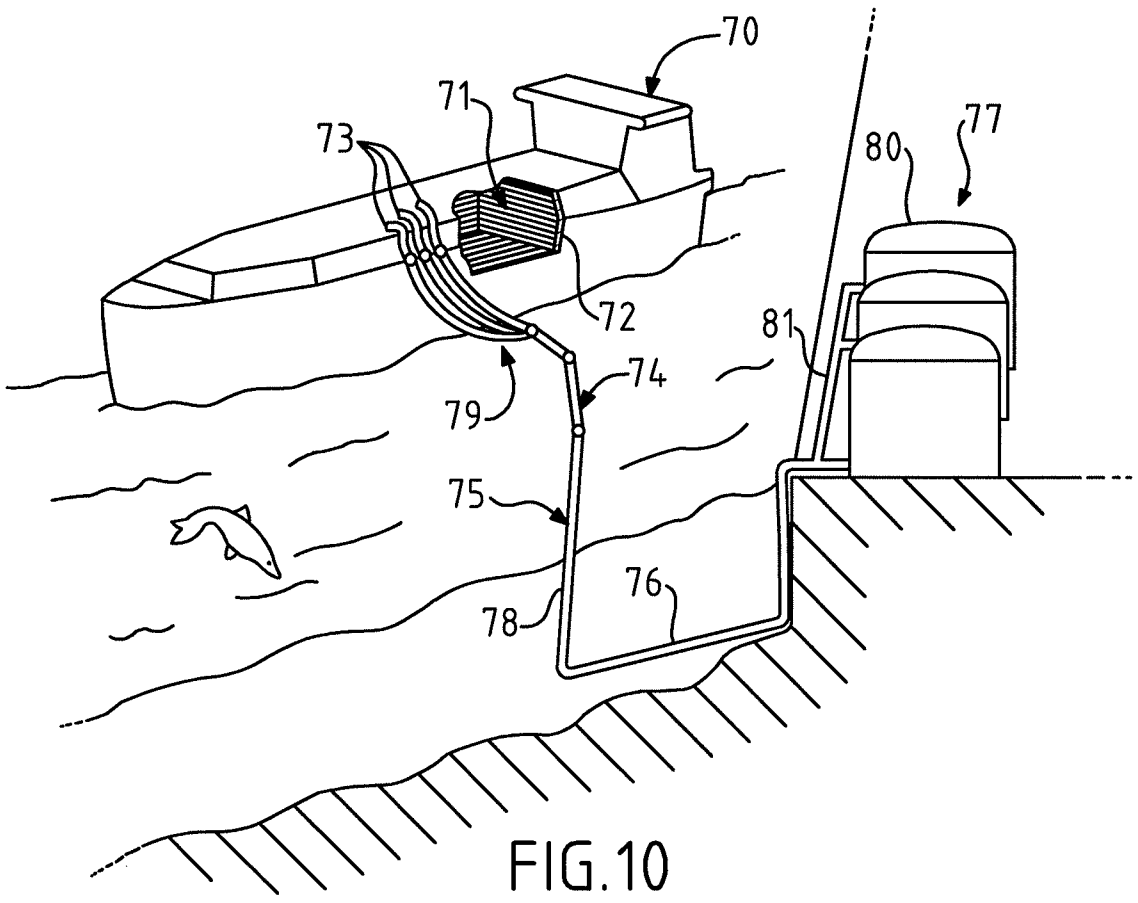

FIG.10

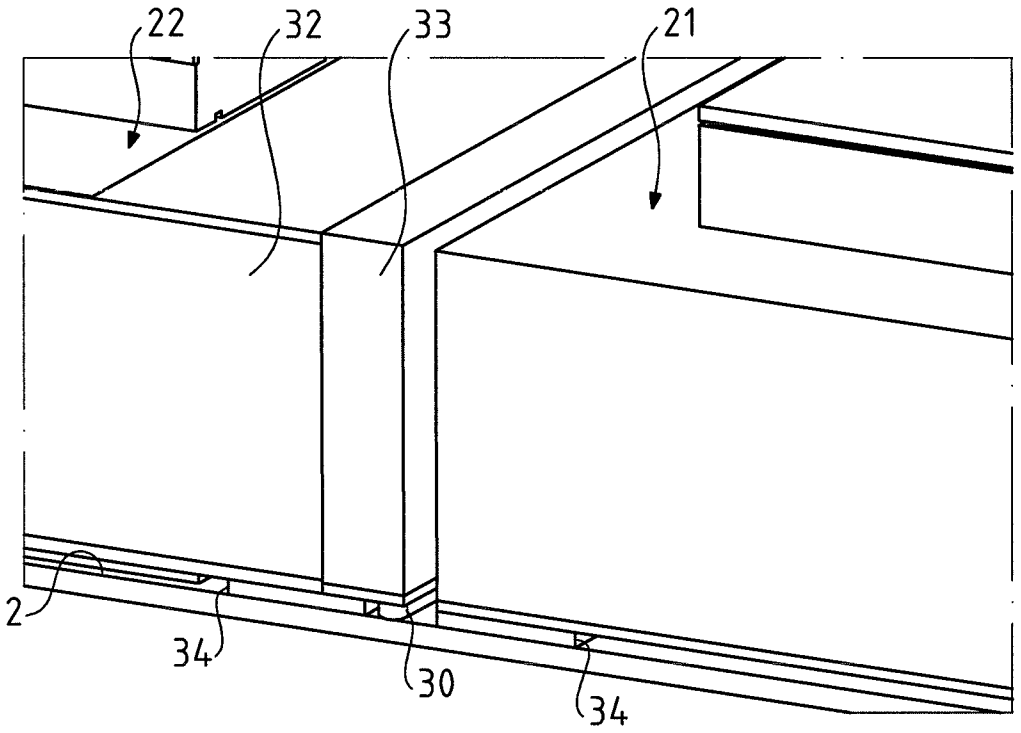

FIG.11

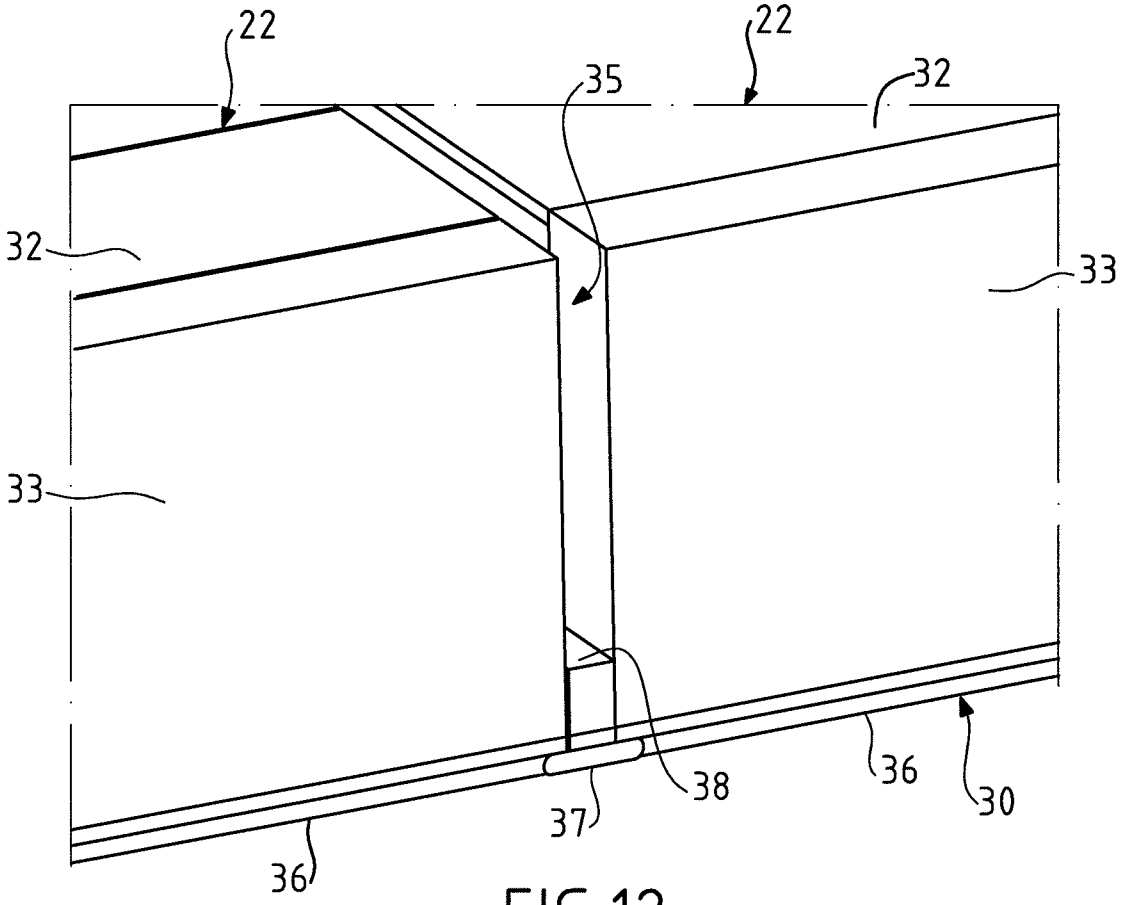

FIG.12

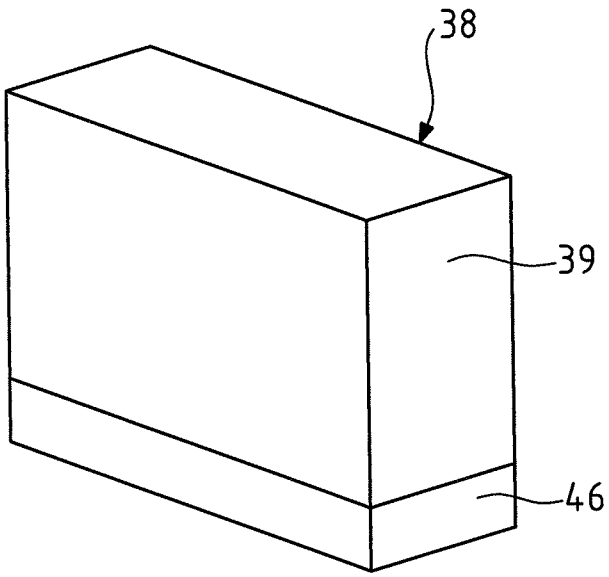

FIG.13