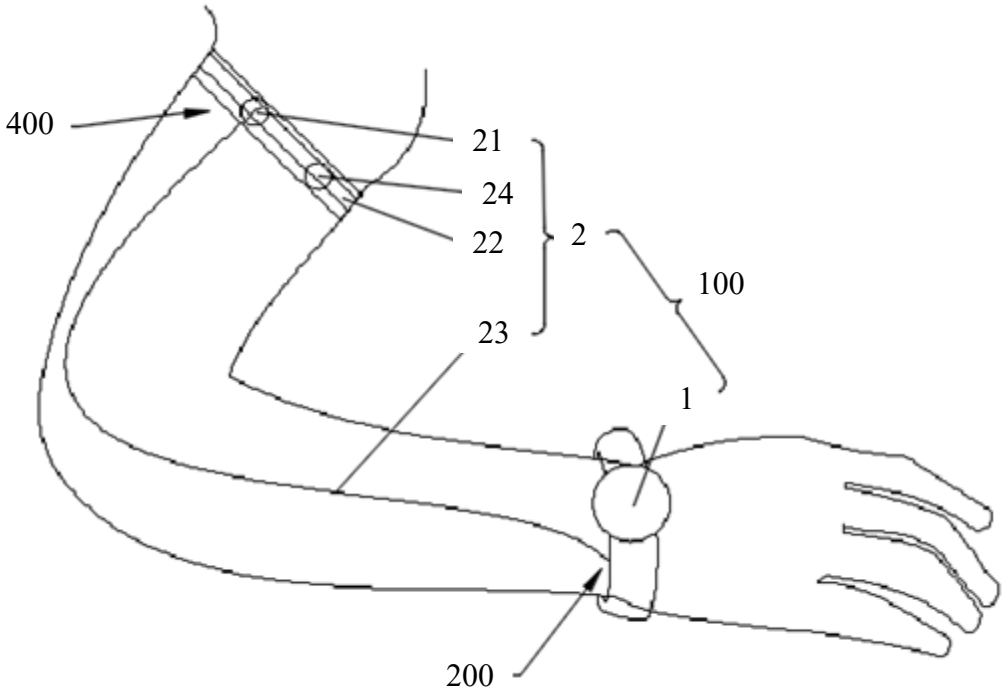

FIG. 1

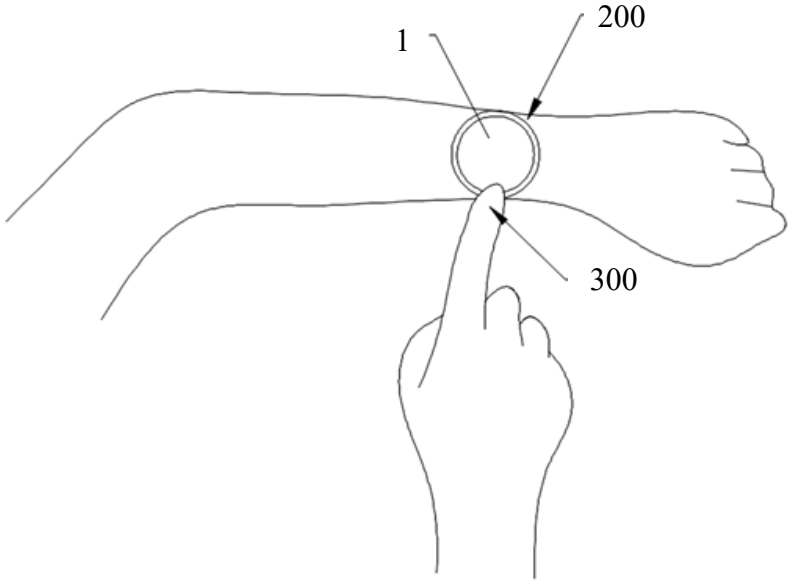

FIG. 2

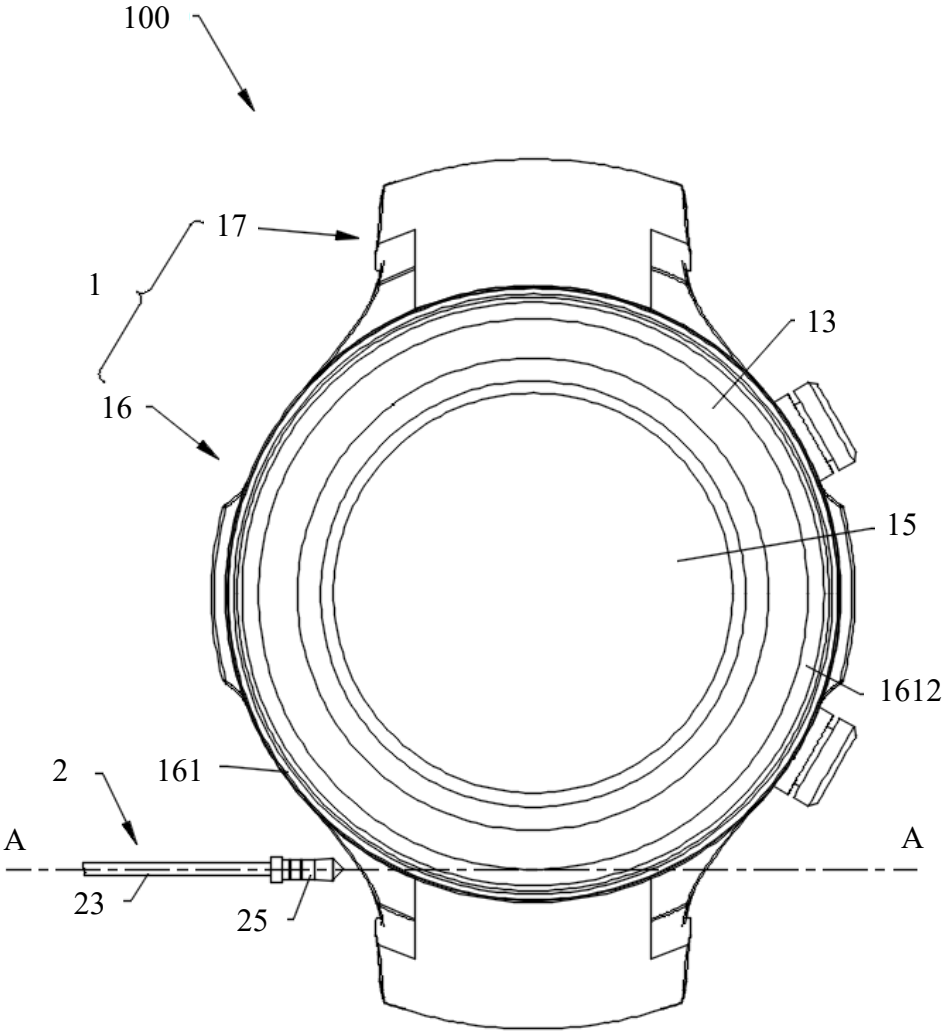

FIG. 3

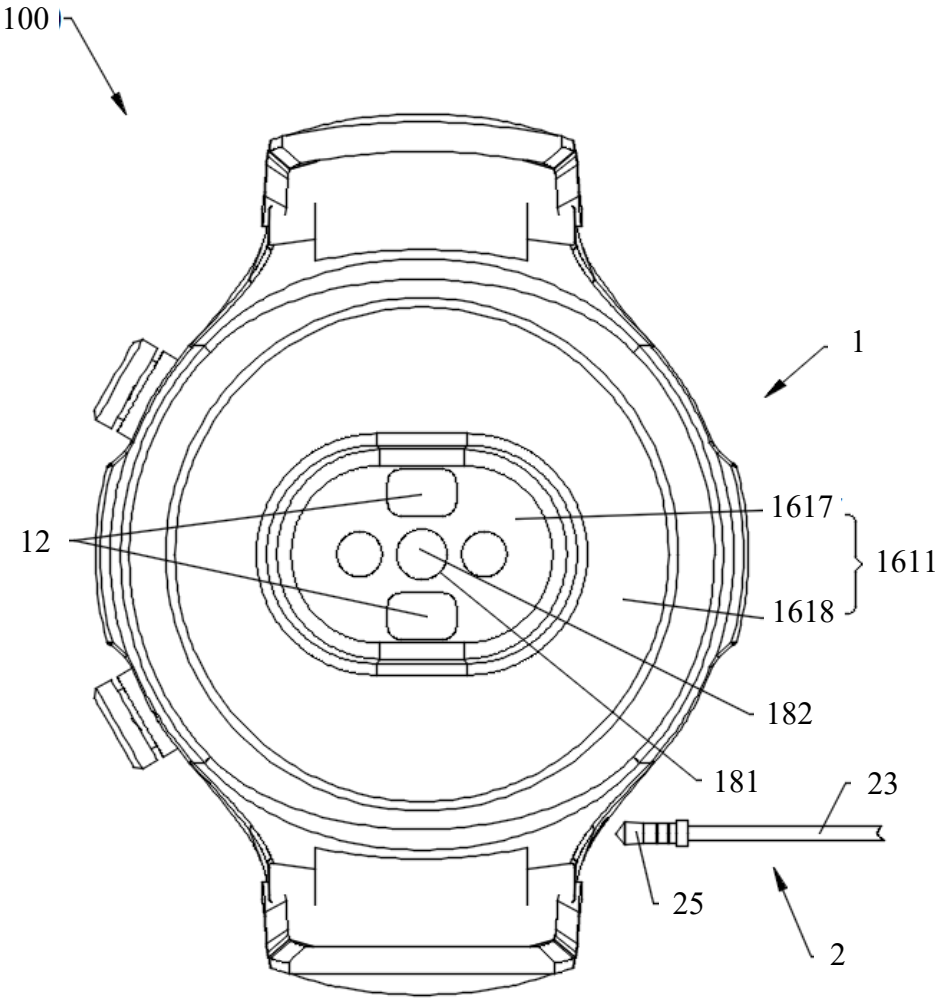

FIG. 4

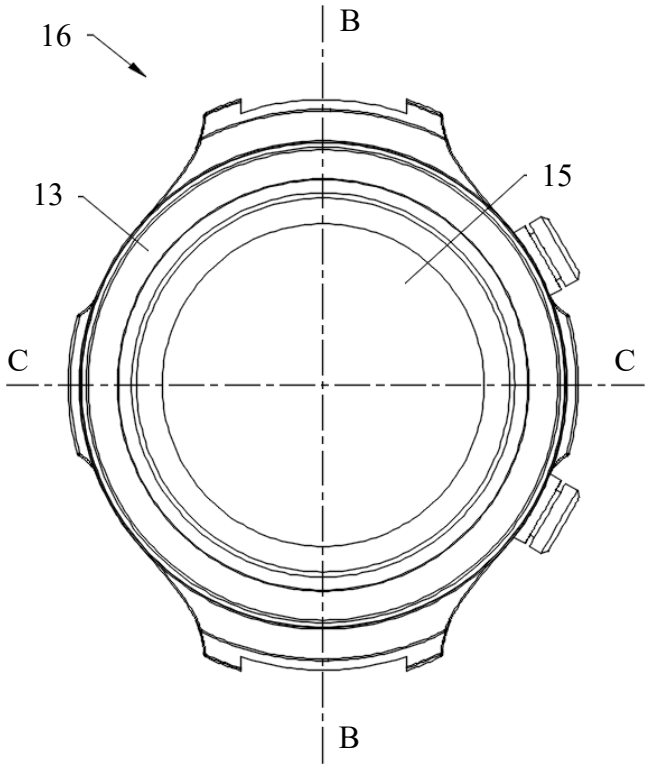
16
B
13
15
C
C
B

FIG. 5

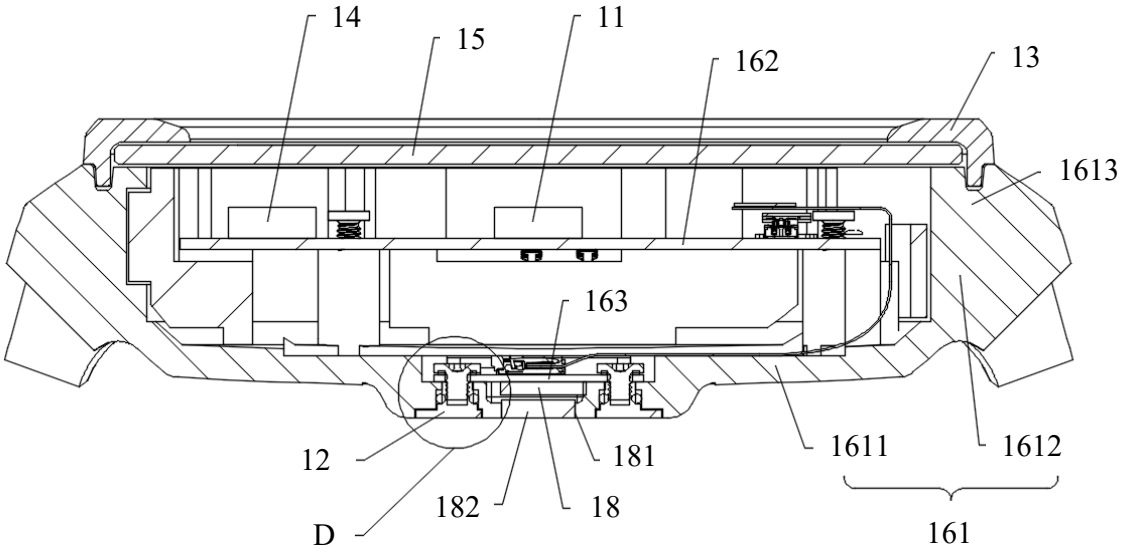
14
15
11
162
13
1613
163
12
181
1611
1612
D
182
18
161

FIG. 6

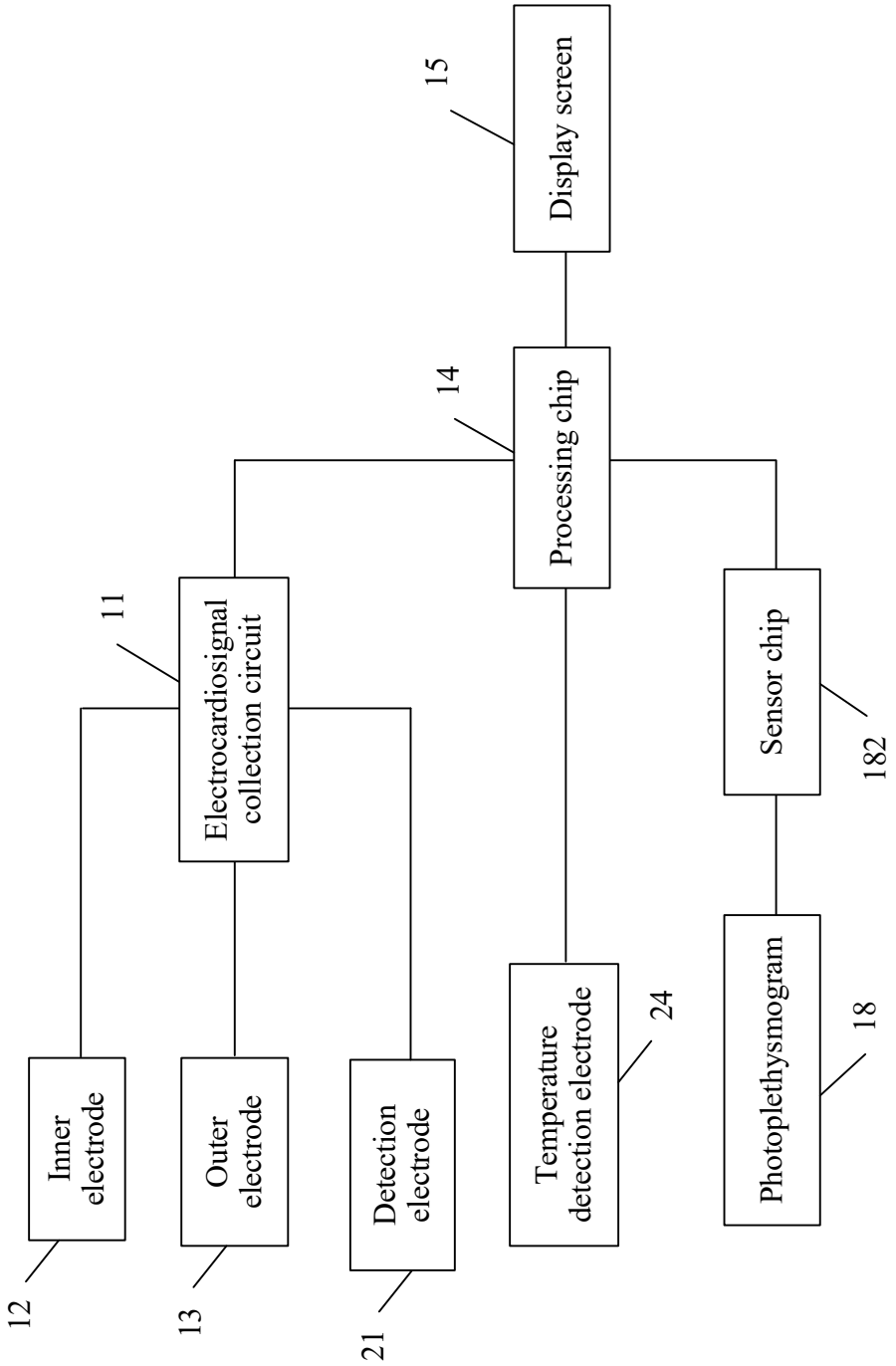
Display screen
15
Processing chip
14
Electrocardiosignal collection circuit
11
Inner electrode
12
Outer electrode
13
Detection electrode
21
Temperature detection electrode
24
Sensor chip
182
Photoplethysmogram
18

FIG. 7

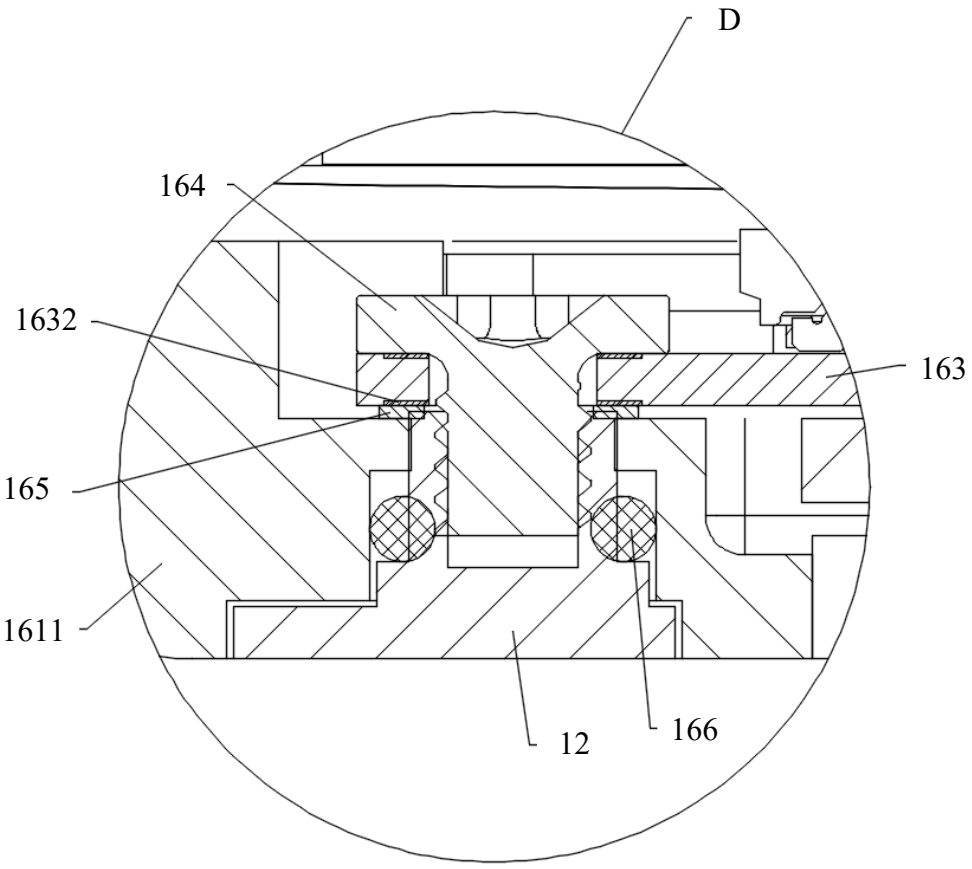

FIG. 8

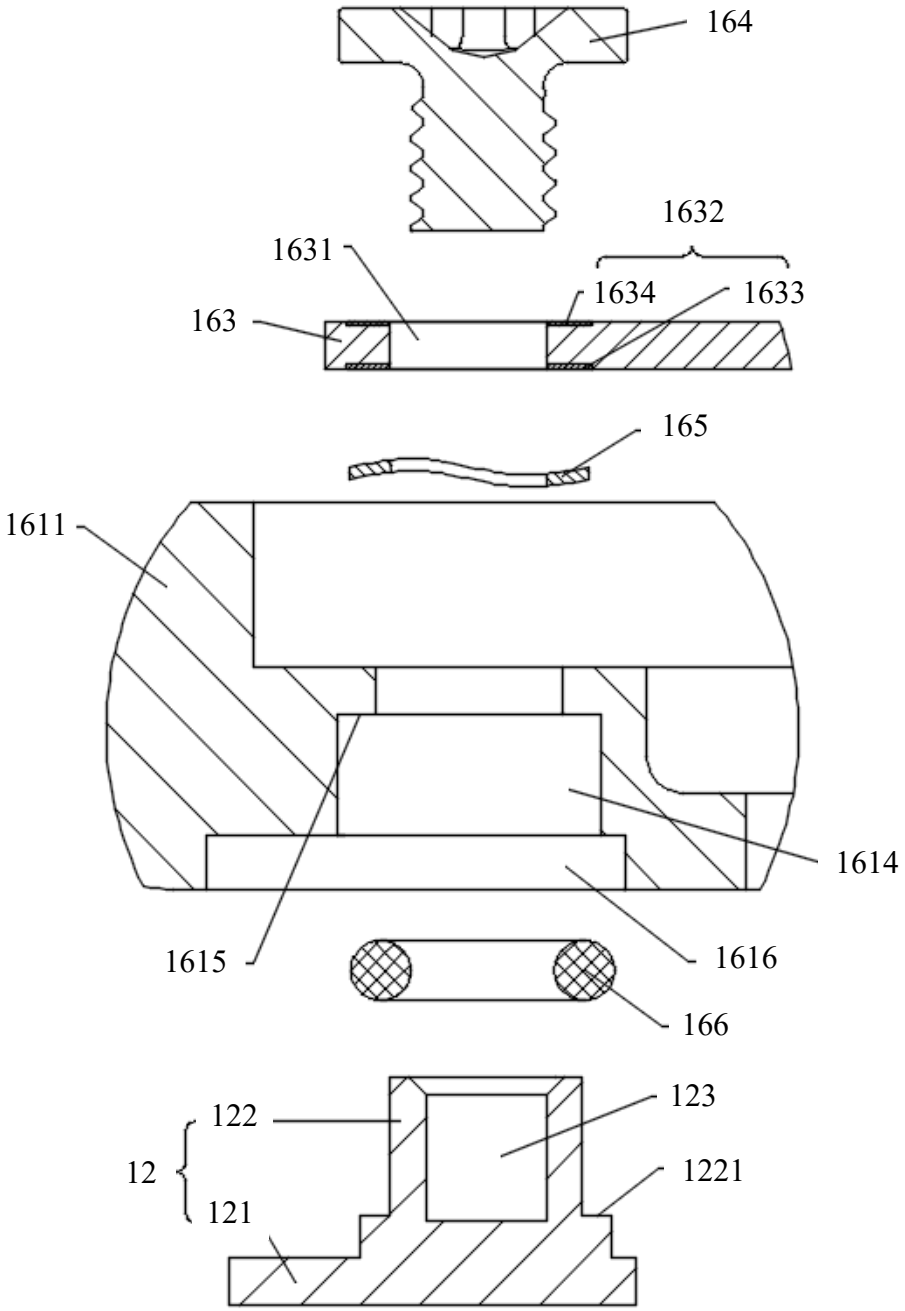
164
1632
1631
1634
1633
163
165
1611
1614
1615
1616
166
123
122
12
1221
121

FIG. 9

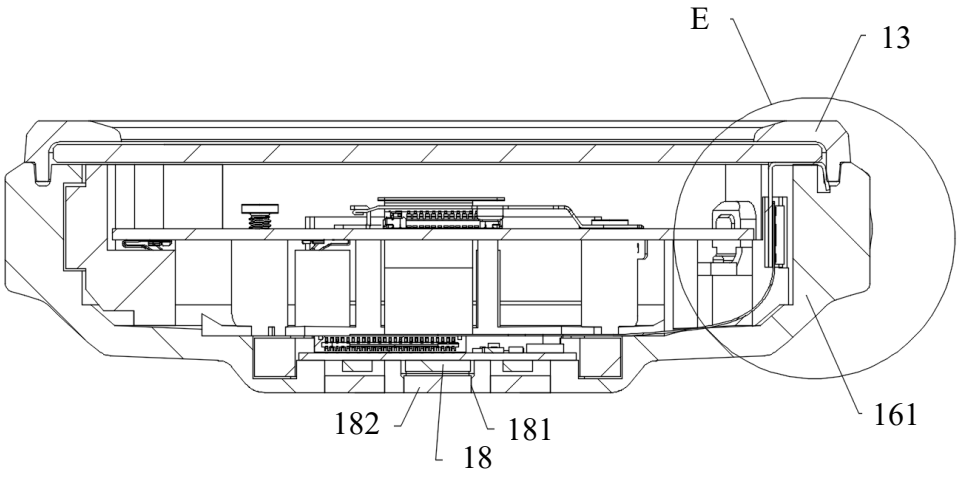

FIG. 10

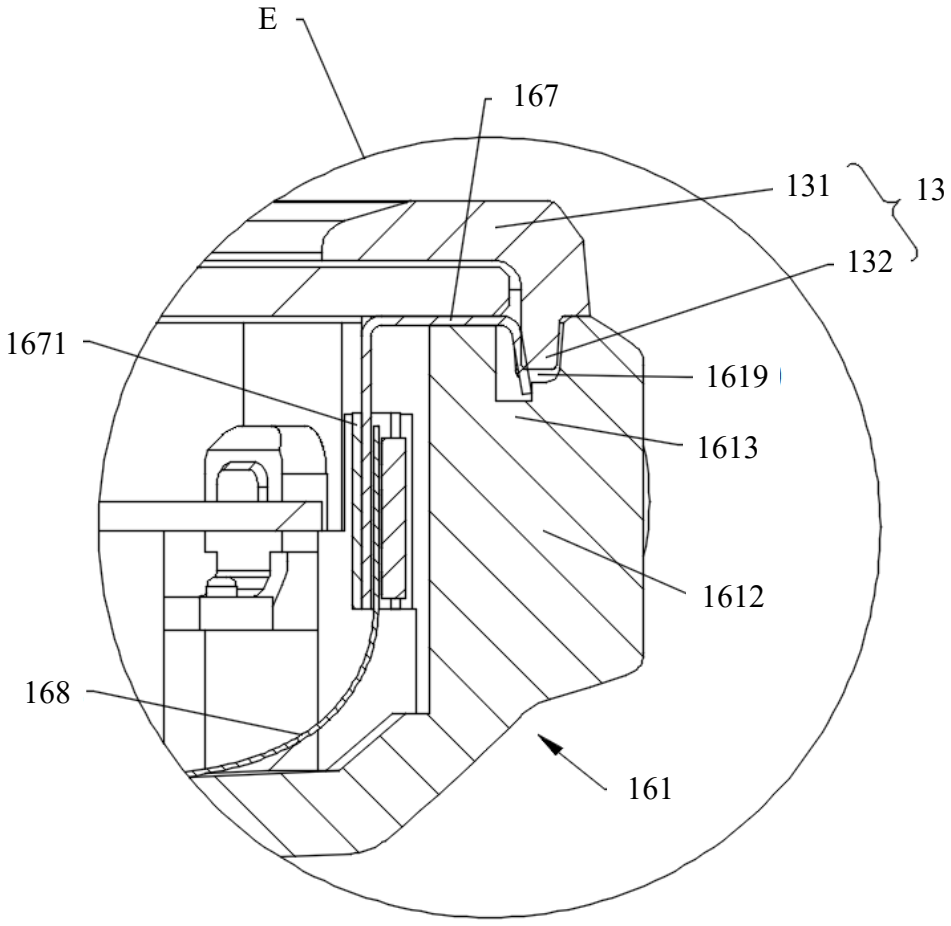

FIG. 11

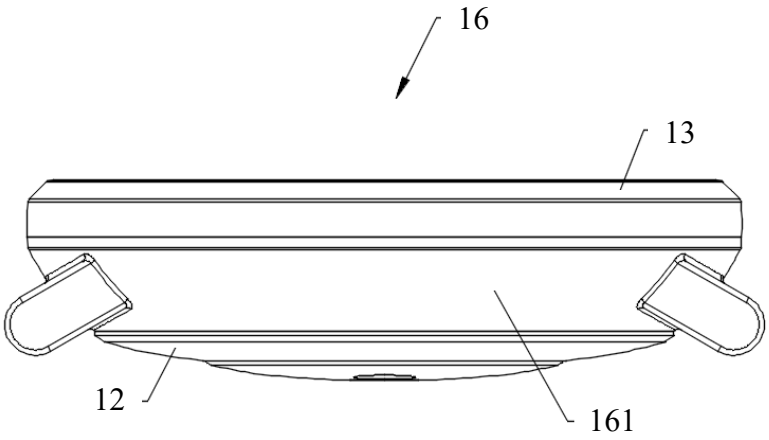

FIG. 12

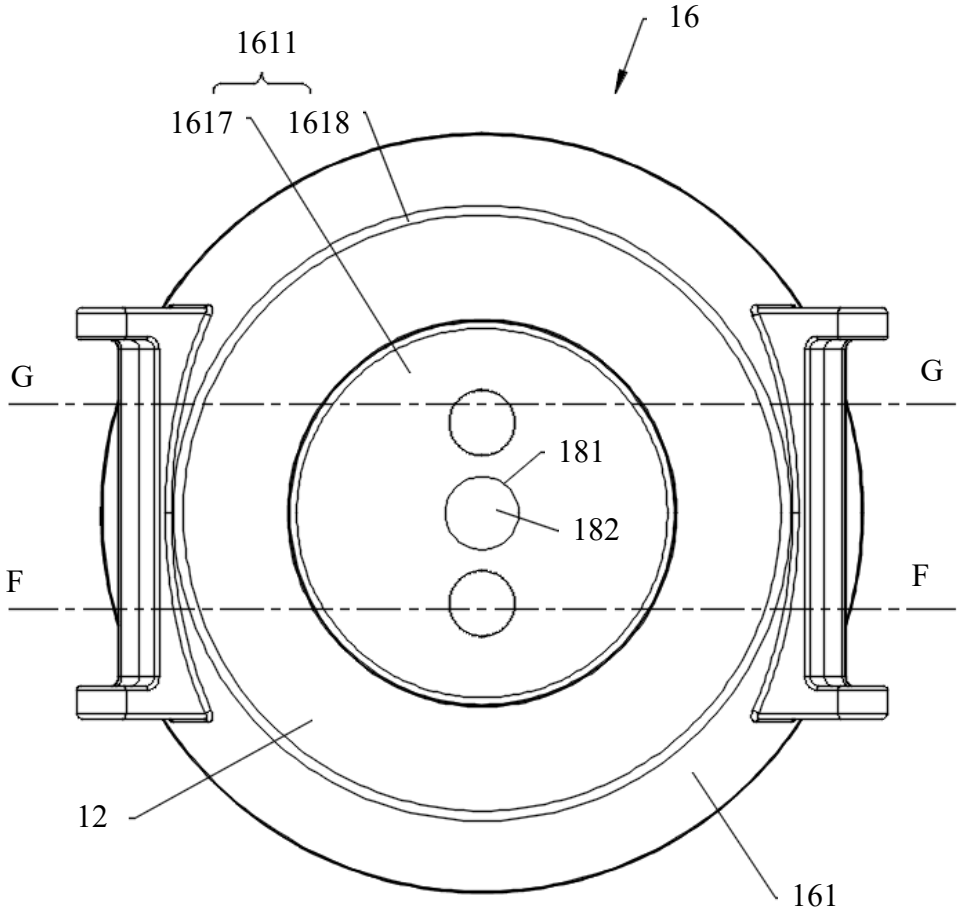

FIG. 13

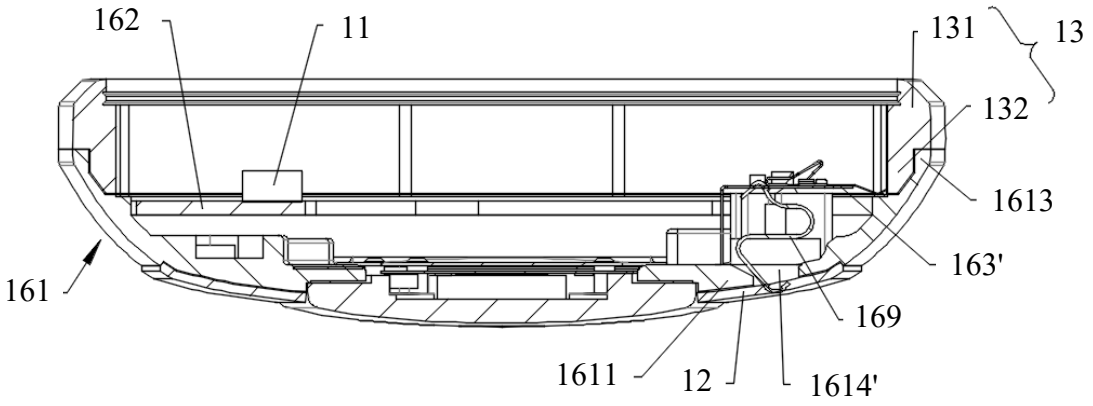
162
11
131
13
132
1613
163'
161
169
1611
12
1614'

FIG. 14

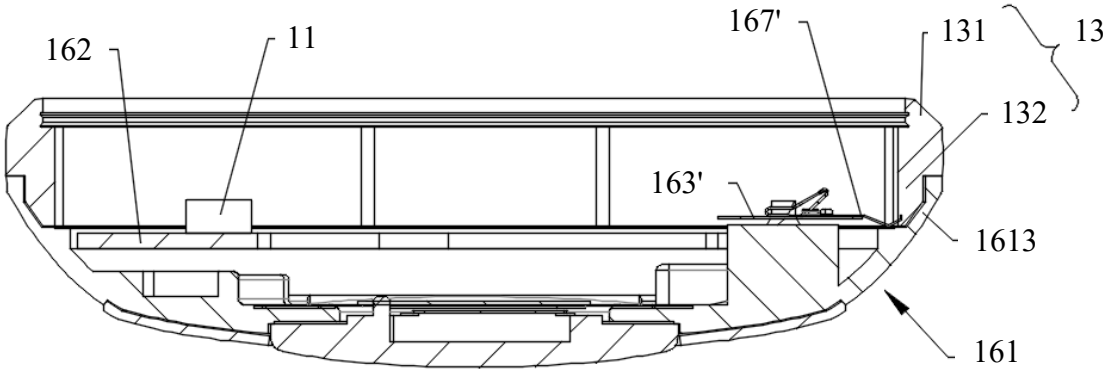
167'
131
13
162
11
132
163'
1613
161

FIG. 15

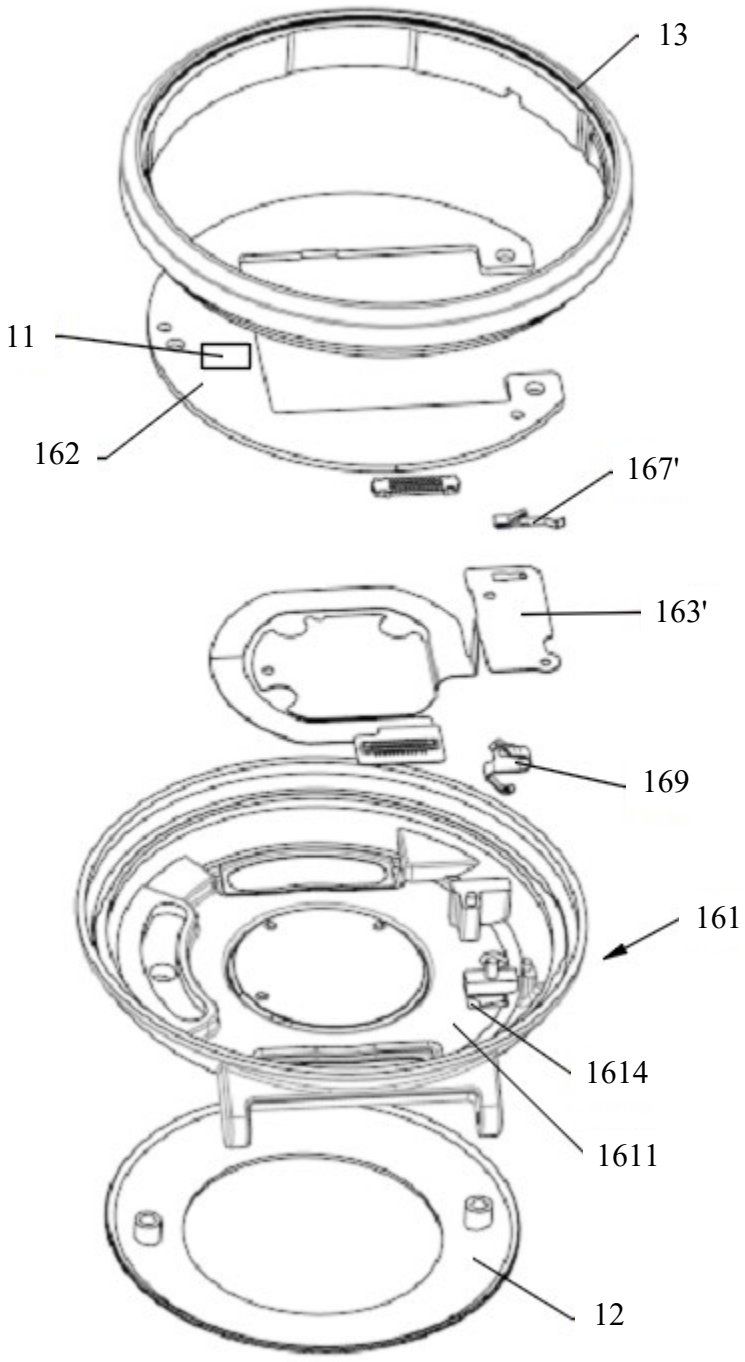

FIG. 16

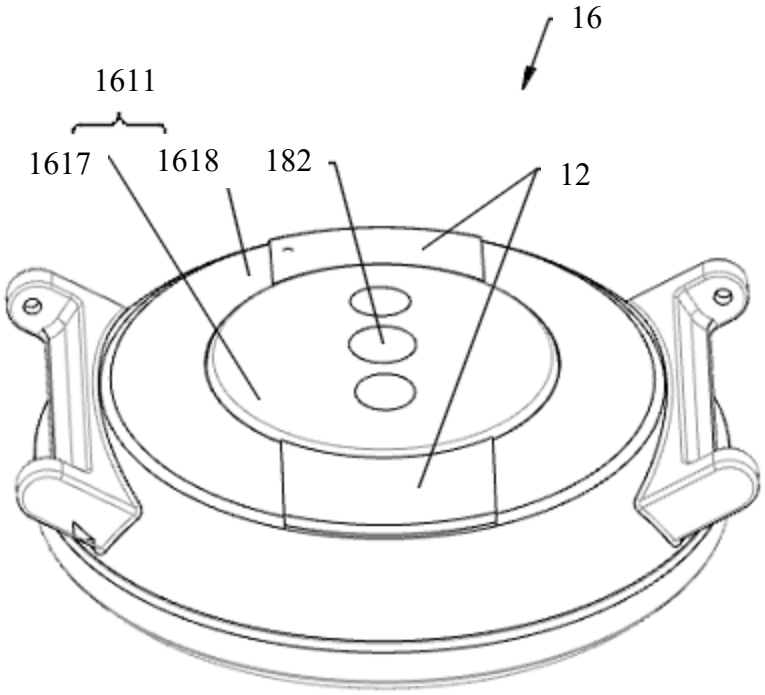

FIG. 17

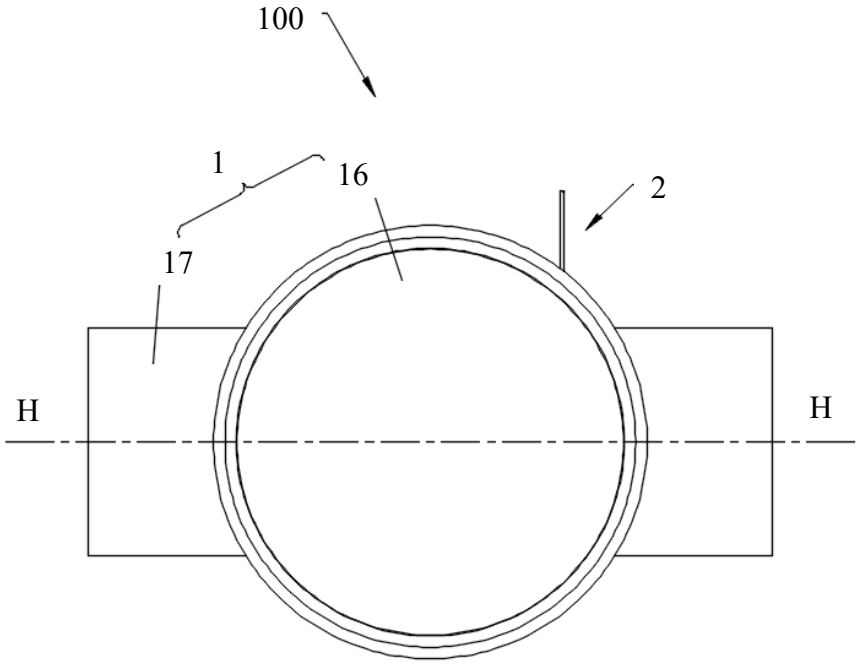

FIG. 18

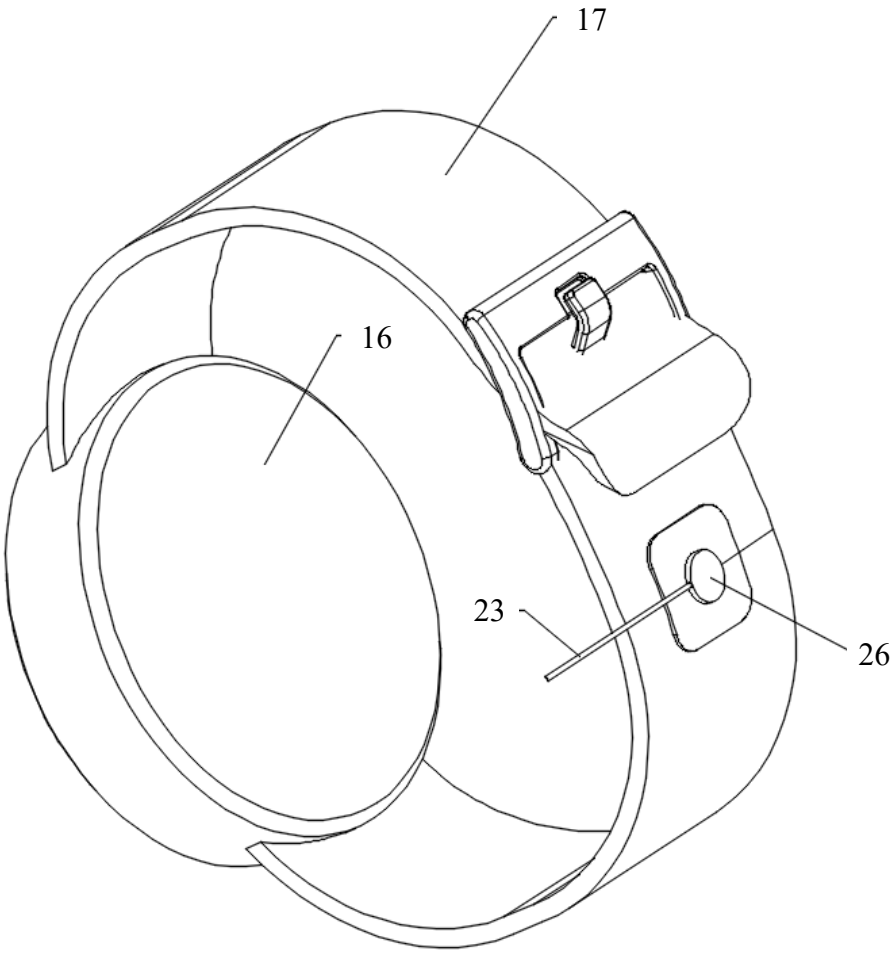

FIG. 19

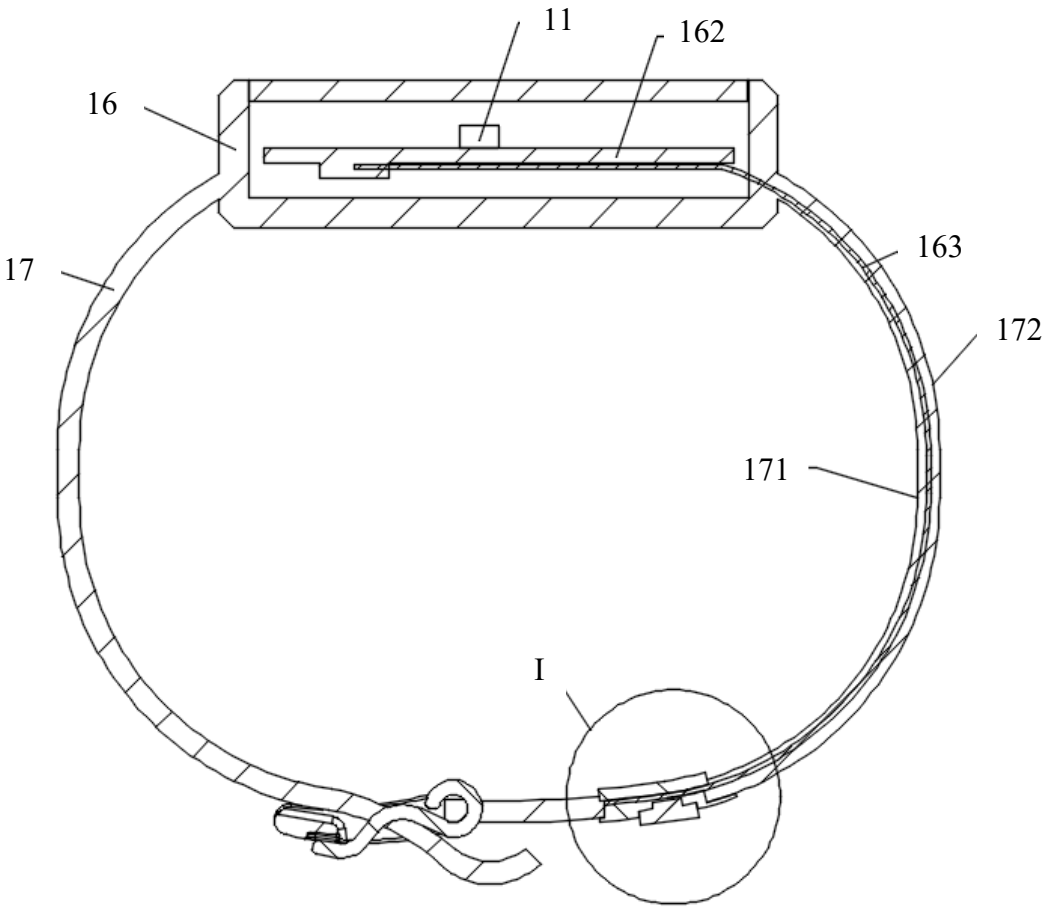

FIG. 20

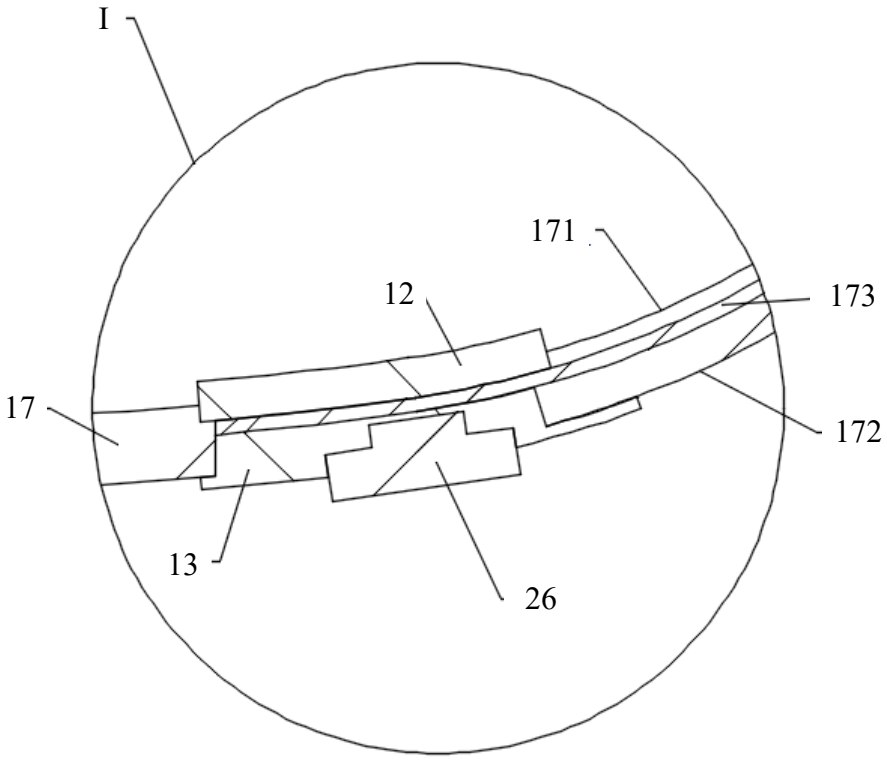

FIG. 21

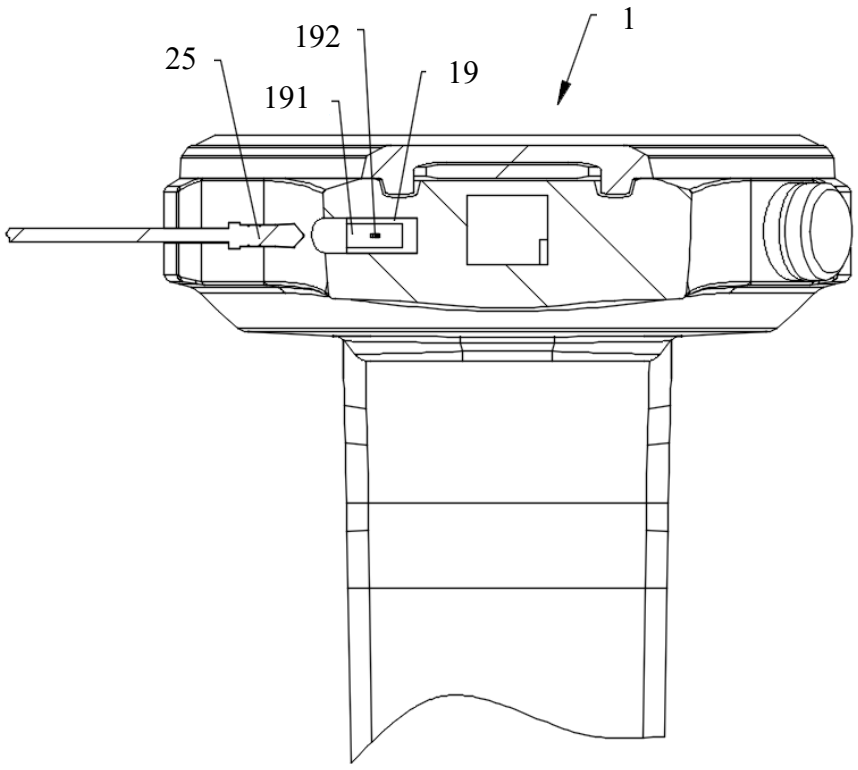

FIG. 22