SUBSTAINED RELEASE TABLETS CONTAINING BUPROPION

Bupropion hydrochloride (Wellbutrin^{R}) is a marketed antidepressant. It is chemically known as (±)-2-(tert-butylamino)-3'-chloropropiophenone hydrochloride. (See U.S. Patents 3.819.706 and 3.885.046). Also see Merck Index. Eleventh Edition. entry No. 1488.

In usage. bupropion hydrochloride is sold in the form of an instant release tablet wherein greater than 75% of bupropion hydrochloride is released from the tablet dissolution media in 45 minutes (See 1993 Physicians Desk Reference (PDR). pages 842 to 844). The PDR indicates bupropion hydrochloride as presently sold in an instant release tablet as being associated with seizures in approximately 0.4% (4/1000) patients treated at doses of up to 450 mg per day. In studies to date. the risk of seizures seem to be strongly associated. in part. with use of instant release tablets.

In order to reduce the seizure rate. it has been determined after experimentation that a controlled sustained release of bupropion hydrochloride should be employed.

Prior art with respect to this invention is to be found in U.S. Patent No. 4.687,660 which discloses controlled sustained release tablets containing bupropion hydrochloride.

The present invention provides an improved product in that it provides sustained release of the active ingredient as well as ease of manufacture over that disclosed in U.S. Patent 4.687.660.

After almost three years of work and testing, the present invention is now able to provide a controlled sustained release. sometimes also referred to as a sustained release (SR) tablet with improved properties and which has a shelf life over one year (i.e.. there is less than 10% loss most preferably less than about 5% loss (breakdown), of buproprion hydrochloride) in one year of storage at room temperature 15 to 25°C (59 to 77°F) at 35 to 60% relative humidity. For example, with a tablet containing 100 mg of bupropion hydrochloride (label strength) the tablet will preferably contain no less than about 95mg of bupropion hydrochloride after one year in storage (shelf

REPLACED SHEETS SG
☑ Description : paged ...1.... to paged ...15.....
☑ Claim(s) : paged ...14... to paged ...16.....
☑ Drawing(s) : paged ....4.. to paged ....4/4....
☑ Abstract : paged ....1.... to paged .....1.....
DATE OF RECEIPT .....

This Sheet Has Been Replaced

life). As used herein, the term "tablet" includes the term "caplet", which is the word used to describe a tablet termed substantially in the shape of a capsule.

The oral administration of the controlled release tablets of this invention to treat depression in humans will be under the jurisdiction of the physician; however, tablets for a 75kg (150 pound) human will ordinarily be given one to three times per day to provide a total daily dosage of 100 to 450mg per day for a time period that the human patient requires same as determined by a physician. The tablets are swallowed by the human in the normal manner with the aid of water or other liquid. The tablets herein preferably have a round biconvex shape (which is preferred); however, this may be varied depending on the creativity of the tablet designer. With the tablets of this invention it is now possible to dose one or two times per day rather than the three times a day as presently done with the currently marketed product.

The present invention provides a sustained release tablet comprising bupropion hydrochloride and hydroxypropyl methylcellulose, the amount of hydroxypropyl methylcellulose to the amount of bupropion hydrochloride being from 0.19:1 to 1.1:1 respectively and the tablet being capable in water of releasing from 20 to 60 percent of the total amount of bupropion hydrochloride in 1 hour, from 50 to 95 percent of the total amount of bupropion hydrochloride in 4 hours and not less than 75 percent of the total amount of bupropion hydrochloride in 8 hours. Cysteine hydrochloride or glycine hydrochloride may also be included. Cysteine hydrochloride is more preferable than glycine hydrochloride, since it unexpectedly causes less discoloration to the tablet core. The amount of bupropion hydrochloride in each tablet is typically from 25mg to 500mg, with the tablet dose being more typically 50mg, 100mg or 150mg.

Methocel^{R} is the brand name for hydroxypropyl methylcellulose (HPMC) from Dow Chemical. Other companies also supply HPMC.

Specific embodiments of the invention will now be described by way of example with reference to the accompanying drawings in which:-

Fig. 1 is a top view of the preferred tablet shape of this invention:

This Sheet Has Been Replaced



9605086-9

Fig. 2 is a side view of the tablet of Fig. 1:

Fig. 3 is a sectional view taken along line 3-3 in Fig. 1:

Fig. 4 is a graph showing plasma bupropion (as the free base) concentrations in nanograms/ml in adult male humans following a single dose of two 50mg bupropion HCl (SR) tablets, divided by two over 24 hours from time of administration provided by the 50mg tablet example of this invention:

Fig. 5 is a graph showing plasma bupropion (as the free base) concentrations in nanograms/ml in adult male humans following a single dose of one 100mg bupropion HCl (SR) tablets over 24 hours provided by the 100mg tablet example of this invention: and

Fig. 6 is a graph showing plasma bupropion (as the free base) concentrations in nanograms/ml in adult male humans following a single 150mg tablet over 24 hours provided by the 150mg (SR) tablet example of this invention.

In order to prepare the controlled sustained release (SR) tablets of this invention, particles of bupropion hydrochloride are preferably blended with microcrystalline cellulose and hydroxypropyl methylcellulose (Methocel) to form an admixture of blended powders. A 20 mesh sieve is conveniently used to screen the bupropion hydrochloride particles, cellulose particles and hydroxypropyl methylcellulose particles prior to blending the ingredients. Then the cysteine hydrochloride or glycine hydrochloride is dissolved in water to form a granulating solution. Thereafter, the granulating solution is preferably sprayed onto the blended powders, which are then dried. A lubricant such as magnesium stearate is added and intermixed (blended) with the blended powders having the granulating solution dried thereon. Other suitable fillers include the following: lactose, starch. Microcrystalline cellulose is also preferably added to the product to provide compressibility. Compression of the mixture in a punch and die is then used to form the tablet core.

Thereafter, the tablet (sometimes referred to as the core) is preferably film coated with a colored coating such as a Opadry Purple, Opadry Blue or Opadry White for identification, taste masking, and appearance purposes to provide a film coated tablet.

This Sheet Has Been Replaced

The film coating does not substantially affect the release rate of the bupropion hydrochloride from the tablet, since the coating is instant release which rapidly dissolves in the stomach. The outer film coating is typically 0.03mm to 0.10mm in thickness.

In the practice of this invention, for every part by weight of bupropion hydrochloride, the amount of hydroxypropyl methylcellulose is 0.19 to 1.1 and more preferably 0.26 to 0.68 parts by weight and the amount of cysteine hydrochloride or glycine hydrochloride is 0.02 to 0.27 and more preferably 0.05 to 0.16 parts by weight. For example, in a tablet containing 100mg of bupropion hydrochloride, the amount of hydroxypropyl methylcellulose is 19mg to 110mg and most preferably 26.7 to 68mg and the amount of cysteine hydrochloride or glycine hydrochloride is 2.7mg to 27mg and most preferably 5mg to 16.2mg.

The surface area to volume of the non film-coated or core portion of the tablets herein is important in maintaining the appropriate controlled sustained release rates.

The ratio of the surface area of the non film coated tablet (sometimes referred to as the core) surface area to tablet volume is preferably 3:1 to 25:1cm^{-1} and more preferably 7:1 to 16:1cm^{-1} for tablets of 50, 100 and 150mg bupropion hydrochloride content. For tablets of 50mg bupropion HCl content the ratio of the tablet surface area to tablet volume is most preferably 13:1 to 16:1cm^{-1} and for the 100mg bupropion HCl content tablet the ratio is most preferably 9:1 to 12:1cm^{-1} and for the 150mg bupropion HCl content tablet the ratio is most preferably 7:1 to 10:1cm^{-1}.

The release rate of bupropion hydrochloride from the sustained release (SR) tablets disclosed (whether or not film coated) herein in distilled water is preferably as follows:

about 20% to about 60% (most preferably 25 to 50%) in 1 hour:

about 50% to 95% (most preferably 60 to 95%) in 4 hours:

and

This Sheet Has Been Replaced



not less than about 75% (most preferably not less than 80%) in 8 hours. For the bupropion HCl 50mg content tablet the release rate of bupropion HCl is preferably 30 to 50% in 1 hour. 70 to 95% in 4 hours and not less than 80% in 8 hours. For the 100mg bupropion HCl content tablet the release rate is preferably 25 to 45% in 1 hour. 60 to 85% in 4 hours and not less than 80% in 8 hours. With the 150mg content tablet the release rate is preferably 25 to 45% in 1 hour. 60 to 75% in 4 hours and not less than 85% in 8 hours.

The test conditions and apparatus to determine the drug release (dissolution) rates of buproprion hydrochloride are as follows:

Apparatus: USP Rotating Paddle (Apparatus II):
Stirring Rate: 50 rpm:
Sample Size: a single unweighted tablet per vessel:
Temperature: 37°C ± 0.5°C
Medium for Dissolution of tablet: 900 ml of distilled water.

The test for dissolution (release rates) is performed as specified below in the U.S. Pharmacopoeia under "Drug Release" and the medium is sampled at 1. 4 and 8 hours.

Sample Preparation: Withdraw a measured portion of the dissolution medium not to exceed 10ml at each sampling point without replacement. Filter the sample through a LID/X GMF 0.45 micron filter or a Zymark 10 micron filter (or equivalent).

Standard Preparation: Accurately weigh approximately 50mg of Bupropion Hydrochloride Reference Standard and transfer into 900ml volumetric flask. Dissolve in and dilute to volume with water and mix (nominal concentration: 0.0556mg bupropion hydrochloride per ml).

Instrumental Conditions:

Instrument:	An appropriate HPLC equipped with a 10-µl sampling loop
Column:	BDS Hypersil C18. 5 micron (50x4.6mm) column. or SUPELCOSIL LC-18-DB. 3 micron (33x4.6mm). or equivalent
Flow Rate:	2.0ml/min

This Sheet Has Been Replaced



Detection: UV. 224nm. 0.1 AUFS or an appropriate AUFS setting
Mobile Phase: Methanol:pH 7.0 phosphate buffer (65:35) appropriately filtered and degassed.

System Suitability Test: Replicate injections of the Standard Preparation give relative standard deviations for peak retention times and peak responses no greater than 2 percent. The tailing factor (T.USP) for the bupropion peak is not greater than 2.5.

Ph 7.0 Phosphate Buffer Preparation: Transfer 27.22g of monobasic potassium phosphate into a 1000-ml volumetric flask. Dissolve in and dilute to volume with water and mix. Transfer 250ml of this solution into a 1000-ml of 0.291 M sodium hydroxide. dilute to volume with water and mix.

Calculation

Step I - Determination of Bupropion Hydrochloride Concentration

% Nominal Bupropion Hydrochloride (0.0556mg/ml) =

$$\frac{\text{SPL Pk Response}}{\text{STD Pk Response}} \times \text{STD Wt} \times \frac{900}{900} \times \frac{100}{L.S}$$

Step II - Sampling Volume Corrections

Perform the following calculations to adjust for sample removal. (Evaporation is insignificant over an 8-hour period when using the Zymate II Automated Dissolution Testing System).

% L.S. Bupropion Hydrochloride released (50mg tablet) =

$$\frac{900 - nv}{900} \times \% \text{ nominal bupropion hydrochloride (sample (n-1))} =$$

$$\frac{v}{900} \sum_{i=1}^{n} \% \text{ nominal bupropion hydrochloride (sample (i))}$$

where

n = number of previous samples taken

This Sheet Has Been Replaced



v = volume of sample taken each time

These calculations can be performed using the BASIC program "DISTAB".

The tablet also preferably includes as other ingredients, e.g., lubricating agents for ease in manufacture and fillers for ease of manufacturing and to bulk the tablet to provide the desired size.

The tablet is also preferably coated with an instant release coating for appearance, taste masking, and product identification e.g. Opadry Purple, Blue or White, which will dissolve in the stomach and not substantially affect bupropion hydrochloride release rates and bupropion hydrochloride stability.

Hydroxypropyl Methylcellulose 2910, USP used in the examples, conforms to 28.0 to 30.00% methoxyl substitution and 7.0 to 12.0% hydroxypropoxyl substitution. The preferred nominal viscosity of 2% solution in water is not less than 3.000 centipoise and not more than 5.600 centipoise. It is supplied by Dow Chemical Company, Midland, MI as Methocel E4M premium CR.

Microcrystalline cellulose, NF supplied by FMC Corporation as Avicel PH 102, has an average particle size of 90 micrometers with particle size specification of 8% $\geq$ 60 mesh and 45% $\leq$ 200 mesh.

Opadry^{R} Purple YS-1-4845 is supplied by Colorcon, Inc., contains FD&C Red No. 40 aluminum lake, hydroxypropyl methycellulose, titanium dioxide, polyethylene glycol, olysorbate 80, and FD&C Blue No. 2 Aluminum Lake.

Opadry^{R} Blue YS-1-4282 is supplied Colorcon, Inc., contains FD&C Blue No. 1 aluminum lake, hydroxypropyl methycellulose, titanium dioxide, polyethylene glycol, and polysorbate 80.

Opadry^{R} White YS-1-7059 is supplied by Colorcon, Inc., contains hydroxypropyl methylcellulose, titanium dioxide, and polyethylene glycol.

This Sheet Has Been Replaced

Reference should now be had to Figs. 1 to 3 for a description of the preferred form of the biconvex film coated tablets of this invention which contain as the active ingredient (drug) 50mg, 100mg or 150mg of bupropion HCl. The tablet (core) is shown at 10 and the film coating is shown at 11 in Fig.3

Tablets having the following dimensions as set forth below for the 50mg, 100mg and 150mg bupropion HCl content tablets in which the letters D (diameter), T (thickness), L (land), C (cap depth) and the R (radius of curvature of the biconvex region) are shown in Figs. 1 to 3.

	50mg	100mg	150mg
R in mm (inches)	10.41 (.410)	12.15 (.4783)	15.34 (.604)
D in mm (inches)	7.40 (.2913)	9.40 (.3701)	11.00 (.4331)
C in mm (inches)	0.66 (.026)	0.91 (.036)	0.99 (.039)
T in mm	3.40	4.32	4.65
L in mm (inches)	0.51 (.002)	0.076 (.003)	0.076 (.003)

Reference now should be had to Figs. 4. 5 and 6 which illustrate plasma bupropion levels. as the free base i.e. the compound bupropion itself (see the Merck Index. Eleventh Edition entry No. 1488) after oral administration to adult males (humans) of 50mg, 100mg and 150mg bupropion HCl film coated tablets of the examples herein. It is to be understood that because of the naure of the film coating. the release rate will be substantially the same whether or not the tablets are film-coated and. therefore. the data is also representative of non film coated tablets disclosed herein.

In particular. Fig. 4 represents plasma levels (divided by 2) of bupropion after oral dosage with two 50mg SR tablets in 21 male (human) patients 18 to 40 years of age weighing 66 to 92kg (132 to 184lbs). The maximum level shown is detected in the blood plasma at least one of the patients and the minimum being that detected in the blood plasma at least one of the patients and the mean being the average of all measurements of all participants.

The bupropion plasma levels for the 50mg tablet dosing measured over 24 hours as in this figure were done as described in the radioimmunoassay test set forth in the article Radioimmunoassay And Pharmacokinetic Profile of Bupropion In The Dog by Robert

This Sheet Has Been Replaced

F. Butz *et al.* published in the Journal of Pharmacology and Experimental Therapeutics. Vol. 217. No. 3 (1981).

Fig. 5 is a repeat with respect to Fig. 4: however a single oral dose of a 100mg SR tablet of this disclosure's example was administered to the same group of males as those tested previously in Fig. 4: however. the bupropion plasma levels were not divided in two. The plasma levels were also measured at the time intervals shown using the test procedure described in the aforementioned Butz *et al.* article.

Fig. 6 represents oral dosing of 24 male (human) patients. ages 20 to 39 years. weight 68 to 98kg (136 to 196lbs). Each of the males was dosed once with a 150mg bupropion HCl SR tablet and bupropion plasma level measurements were made as shown on the plot of Fig. 6 at the time intervals shown to arrive at the maximum. minimum for any patient and the mean (average) for all patients in the test.

The measurements using the 150mg tablets of the examples were determined following the procedure described in the article entitled "Determination of Bupropion and Its Major Basic Metabolites in Plasma by Liquid Chromatography with Dual - Wavelength Ultraviolet Detection" by Thomas B. Cooper *et al.* published in Journal of Pharmaceutical Sciences. Vol. 73. No. 8. August 1984. The results were not divided by two as with the Fig. 4 results.

It should be understood that variations may occur in biological measurements from test to test. It should also be understood that the tablet measurements may change somewhat without departing from the spirit of the invention and that the tablet dimensions will also vary because of variability in materials. manufacturing processes. and tolerance achievable.

It should be understood that the outer coating on the core is preferred in this invention but is not a required feature of the invention herein.

This Sheet Has Been Replaced

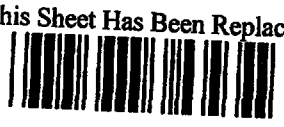

EXAMPLE 1

PREPARATION OF 150MG BUPROPION HCL CONTENT TABLETS

CORE INGREDIENTS	mg/tablet	kg/batch
Bupropion Hydrochloride	150.0	150.0
Microcrystalline Cellulose. NF	198.5	198.5
Hydroxypropyl Methylcellulose 2910. USP	40.00	40.00
Cysteine Hydrochloride. USP	7.50	7.50
Magnesium Stearate. NF	4.00	4.00
Purified Water. USP	q.s.	q.s
	400.0 mg	
Surface Area to Volume Ratio	$8.818cm^{-1}$	
Volume	$0.3656cm^3$	
Surface Area	$3.224cm^2$	

COATING INGREDIENTS		
Opadry Purple YS-1-4845	16.00	20.00kg*
*Includes 25% overage.		
Purified Water. USP	q.s	180.00kg
Carnauba Wax. NF	0.04	0.04kg

Coating thickness≈ 0.05 - 0.10mm for all tablets of the examples.

"q.s." means sufficient quantity in the examples.

TYPICAL MANUFACTURING PROCEDURE AND ASSEMBLING PROCESS

Bupropion Hydrochloride Sustained-Release Tablets. 150mg Bupropion Hydrochloride per coated Tablet.

1. Sift and blend the following:
   bupropion hydrochloride
   microcrystalline cellulose
   hydroxypropyl methylcellulose

2. Dissolve the cysteine hydrochloride in the purified water.

This Sheet Has Been Replaced

3. Spray the solution from Step 2 onto the blended powders from Step 1 using a fluid bed granulator. Additional purified water may be used, if necessary, to obtain proper granule wetness.

4. Dry the granules.

5. Add magnesium stearate to the granules and mill.

6. Blend the milled granules.

7. Compress the granules at approximately 400.0mg or a weight equivalent to 150mg bupropion hydrochloride on a rotary press fitted with 11.0mm round punches and dies, the upper and lower punches plain.

8. Prepare a film-coating suspension of Opadry Purple YS-1-4845 dispersed in purified water.

9. Spray the coating suspension onto the core tablets using suitable coating equipment until the desired weight gain is achieved.

10. Polish the coated tablets in the coating equipment using carnauba wax.

EXAMPLE 2

PREPARATION OF 100MG BUPROPION HCl CONTENTS TABLETS

CORE INGREDIENTS	mg/tablet	kg/batch
Bupropion Hydrochloride	100.00	150.0
Microcrystalline Cellulose, NF	97.00	145.5
Hydroxypropyl Methylcellulose 2910, USP	54.00	81.00
Cysteine Hydrochloride, USP	16.20	24.30
Magnesium Stearate, NF	2.800	4.200
Purified Water, USP	q.s	100.0
	270.0mg	

This Sheet Has Been Replaced

Surface Area to Volume Ratio	$10.89cm^{-1}$	
Volume	$0.2766cm^3$	
Surface Area	$3.013cm^2$	
COATING INGREDIENTS		
Opadry Blue YS-1-4282	10.00	20.00*
*Includes 33.3% overage		
Purified Water. USP	q.s	180.0
Carnauba Wax. NF	0.02667	.040
	280.03mg	

Coating thickness ≈ 0.05 - 0.10mm

TYPICAL MANUFACTURING PROCEDURE AND ASSEMBLING PROCESS

Bupropion Hydrochloride Sustained-Release Tablets. 100mg Bupropion Hydrochloride Per Coated Tablet.

1. Sift and blend the following:
   bupropion hydrochloride
   microcrystalline cellulose
   hydroxypropyl methylcellulose.

2. Dissolve the cysteine hydrochloride in the purified water.

3. Spray the solution from Step 2 onto the blended powders from Step 1 using a fluid bed granulator. Additional purified water may be used. if necessary. to obtain proper granule wetness.

4. Dry the granules.

5. Add magnesium stearate to the granules and mill.

6. Blend the milled granules.

This Sheet Has Been Replaced

7. Compress the granules at approximately 270.0mg or a weight equivalent to 100mg bupropion hydrochloride on a rotary press fitted with 9.4mm round punches and dies. the upper and lower punches plain.

8. Prepare a film-coating suspension of Opadry Blue. YS-1-4282 dispersed in purified water.

9. Spray the coating suspension onto the core tablets using suitable coating equipment until the desired weight gain is achieved.

10. Polish the coated tablets in the coating equipment using carnauba wax.

EXAMPLE 3

PREPARATION OF 50MG BUPROPION HCL CONTENT TABLETS

CORE INGREDIENTS	mg/tablet	kg/batch
Bupropion Hydrochloride	50.0	150.0
Microcrystalline Cellulose NF	41.50	124.5
Hydroxypropyl Methylcellulose 2910. USP	34.00	102.0
Cysteine Hydrochloride. USP	8.100	24.30
Magnesium Stearate. NF	1.400	4.200
Purified Water. USP	q.s	q.s
	135.0mg	
Surface Area to Volume Ratio	$14.37cm^{-1}$	
Volume	$0.1386cm^{3}$	
Surface Area	$1.9914cm^{2}$	
COATING INGREDIENTS		
Opadry White YS-1-7059	5.000	20.00*
Purified Water. USP	q.s	180.0
Carnauba Wax. NF	0.01333	0.040
	140.0mg	

This Sheet Has Been Replaced

*Includes 33.3% overage
Coating thickness ≈ 0.03 - 0.07mm

TYPICAL MANUFACTURING PROCEDURE AND ASSEMBLING PROCESS

Bupropion Hydrochloride Sustained-Release Tablets. 50mg Bupropion Hydrochloride Per Coated Tablet

1. Sift and blend the following:

   bupropion hydrochloride
   microcrystalline cellulose
   hydroxypropyl methylcellulose.

2. Dissolve the cysteine hydrochloride in the purified water.

3. Spray the solution from Step 2 onto the blended powders from Step 1 using a fluid bed granulator. Additional purified water may be used. if necessary, to obtain proper granule wetness.

4. Dry the granules.

5. Add magnesium stearate to the granules and mill.

6. Blend the milled granules.

7. Compress the granules at approximately 135.0mg or a weight equivalent to 50mg bupropion hydrochloride on a rotary press fitted with 7.4mm round punches and dies. the upper and lower punches plain.

8. Prepare a film-coating suspension of Opadry White. YS-1-7059 dispersed in purified water.

9. Spray the coating suspension onto the core tablets using suitable coating equipment until the desired weight gain is achieved.

This Sheet Has Been Replaced



10. Polish the coated tablets in the coating equipment using carnauba wax.

This Sheet Has Been Replaced

This Sheet Has Been Replaced

CLAIMS

1. A sustained release tablet comprising bupropion hydrochloride and hydroxypropyl methylcellulose. the amount of hydroxypropyl methylcellulose to the amount of bupropion hydrochloride being from 0.19 : 1 to 1.1 : 1 respectively and the tablet being capable in water of releasing from 20 to 60 percent of the total amount of bupropion hydrochloride in 1 hour. from 50 to 95 percent of the total amount of bupropion hydrochloride in 4 hours and not less than 75 percent of the total amount of bupropion hydrochloride in 8 hours.

2. A sustained release tablet according to claim 1. wherein the amount of hydroxypropyl methylcellulose to the amount of bupropion hydrochloride is 0.26:1 to 0.68:1. the tablet being capable in water of releasing from 25 to 50 percent of the total amount of bupropion hydrochloride in 1 hour and from 60 to 95 percent of the total amount of bupropion hydrochloride in 4 hours.

3. A sustained release tablet according to either of claims 1 and 2. wherein bupropion hydrochloride is present in an amount of from 25 to 500 mg.

4. A sustained release tablet according to claim 3. containing from 50 to 150mg of bupropion hydrochloride.

5. A sustained release tablet according to any of claims 1 to 4. wherein said tablet has a surface area to volume ratio of 3:1 to 25:1cm^{-1}.

6. A sustained release tablet according to claim 5. wherein said surface area to volume ratio is 7:1 to 16:1cm^{-1}.

7. A sustained release tablet according to any of the preceding claims comprising glycine hydrochloride or cysteine hydrochloride.

8. A sustained release tablet according claim 7. wherein the amount of cysteine hydrochloride or glycine hydrochloride to one part of bupropion hydrochloride is 0.02 to 0.27.

* C L M S *

9. A sustained release tablet according to claim 7 or 8, wherein the amount of cysteine hydrochloride or glycine hydrochloride to one part of bupropion hydrochloride is 0.05 to 0.16.

10. A sustained release tablet according to any of the preceding claims, wherein said tablet has less than 10% degradation of bupropion hydrochloride when stored for one year at 15 to 25°C and 35% to 60% relative humidity.

11. A sustained release tablet according to claim 10, wherein said tablet has less than 5% degradation of bupropion hydrochloride.

12. A sustained release tablet according to any of the preceding claims, wherein the tablet has an instant release film coating.

13. A sustained release tablet according to any preceding claim, containing 50mg of bupropion hydrochloride.

14. A sustained release tablet according to any preceding claim, containing 100mg of bupropion hydrochloride.

15. A sustained release tablet according to any preceding claim, containing 150mg of bupropion hydrochloride.

16. A sustained release tablet according to claim 13, releasing between 30 to 50 percent of bupropion hydrochloride in 1 hour, 70 to 95 percent in 4 hours and not less than 80 percent in 8 hours, said tablet having a surface area to volume ratio of 13:1 to 16:1cm^{-1}.

17. A sustained release tablet according to claim 14, releasing between 25 to 45 percent of bupropion hydrochloride in 1 hour, 60 to 85 percent in 4 hours and not less than 80 percent in 8 hours, said tablet having a surface area to volume ratio of 9:1 to 12:1cm^{-1}.

18. A sustained release tablet according to claim 15, releasing 25 to 45 percent of bupropion hydrochloride in 1 hour, 60 to 75 percent in 4 hours and not less

than 85 percent in 8 hours. said tablet having a surface area to volume ratio of 7:1 to 10:1cm^{-1}.

19. A sustained release tablet comprising 100mg of bupropion hydrochloride. 19 to 110mg of hydroxypropyl methylcellulose and 2.7 to 27mg of cysteine hydrochloride or glycine hydrochloride.

20. A sustained release tablet comprising 100mg of bupropion hydrochloride. 26 to 68mg of hydroxypropyl methycellulose and 5 to 16.2mg of cysteine hydrochloride or glycine hydrochloride.

21. A sustained release tablet according to any of the preceding claims for use in the treatment of depression in a human being.

* C L M S *

This Sheet Has Been Replaced

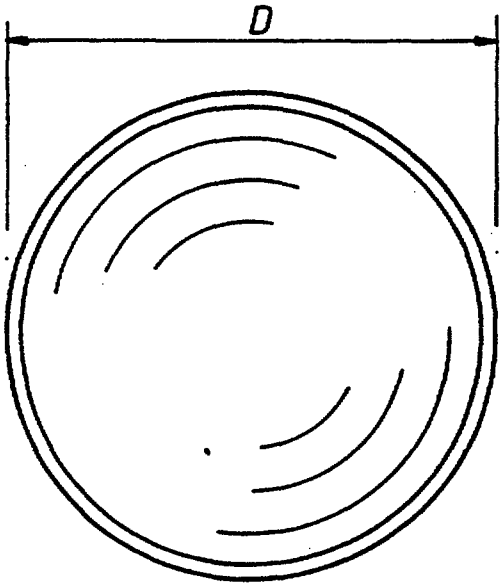

FIG. 1

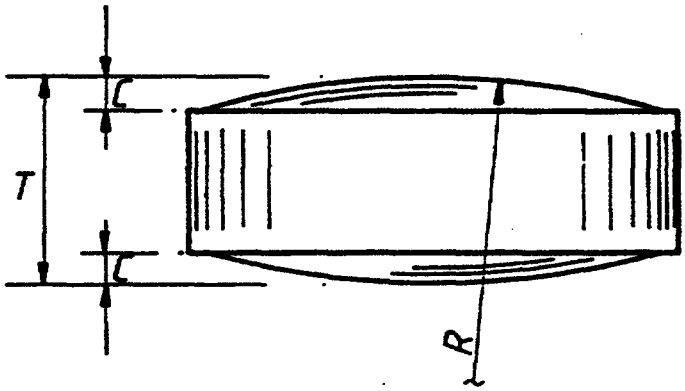

FIG. 2

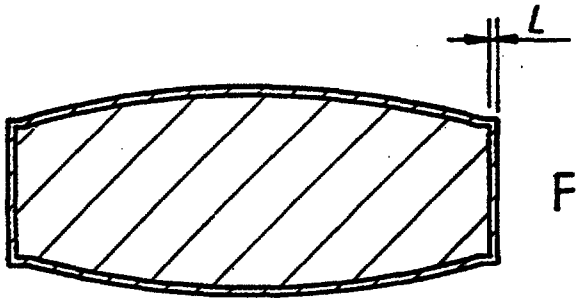

FIG. 3

This Sheet Has Been Replaced

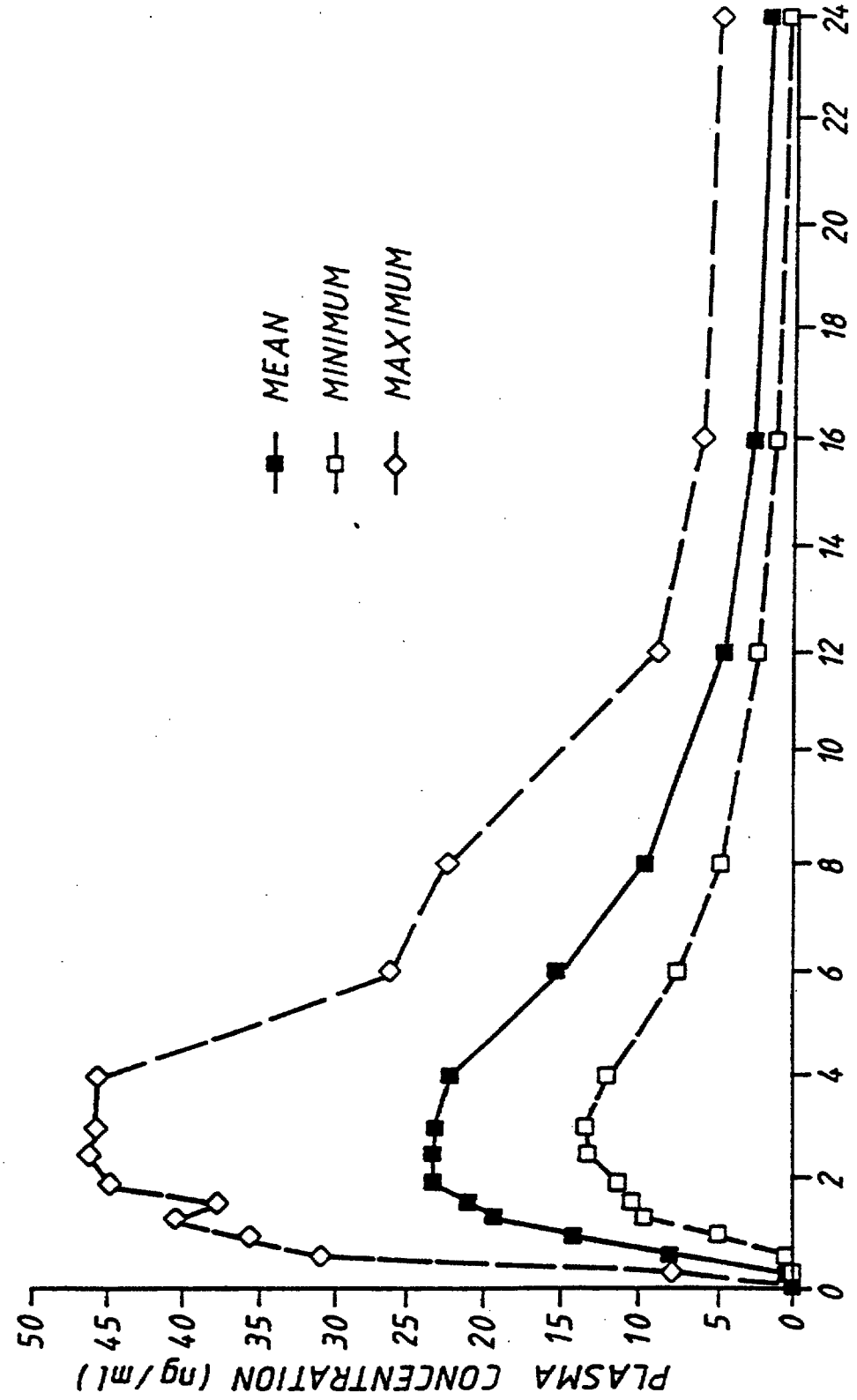

FIG. 4

This Sheet Has Been Replaced

SUBSTITUTE SHEET

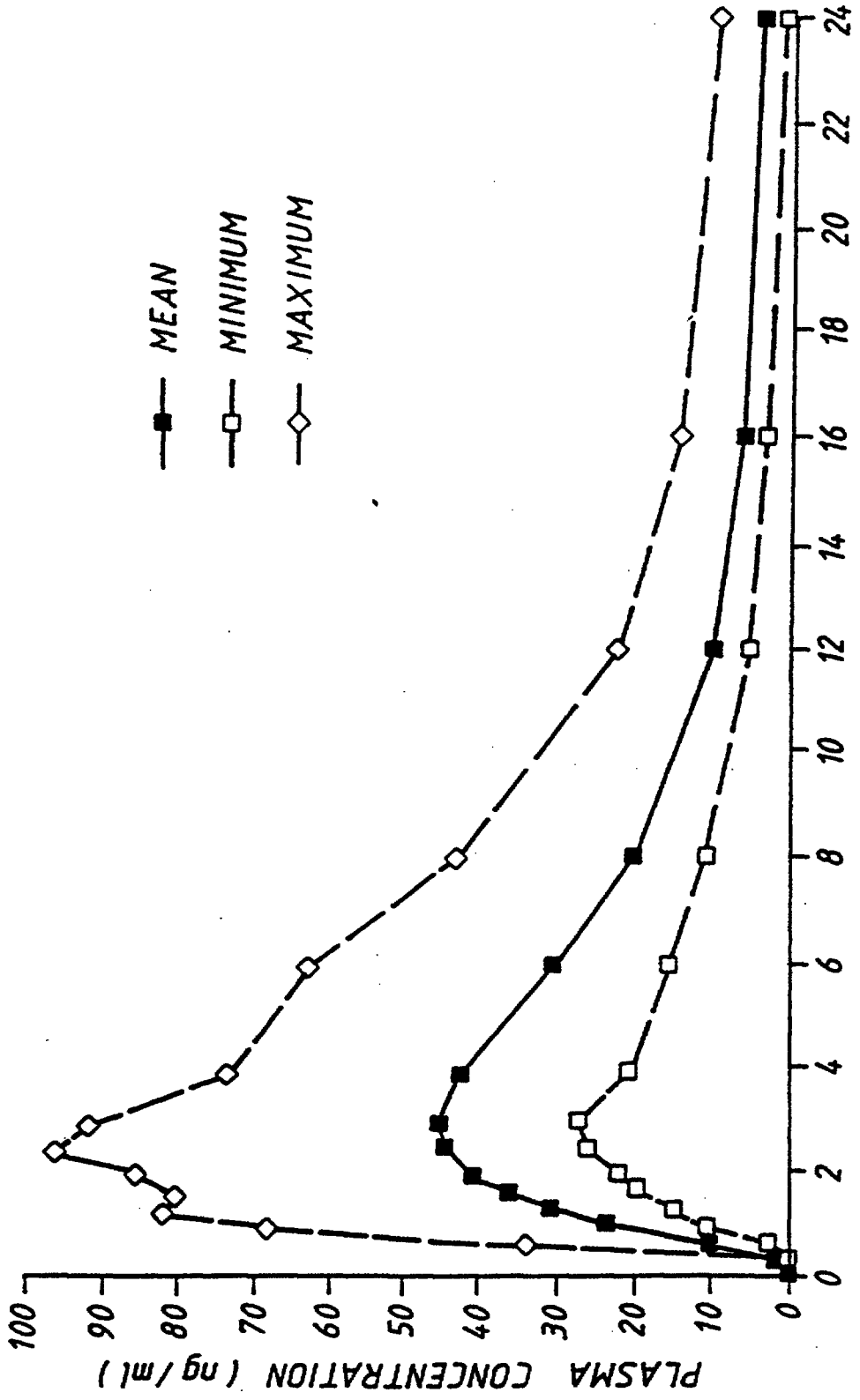

FIG. 5

This Sheet Has Been Replaced

SUBSTITUTE SHEET

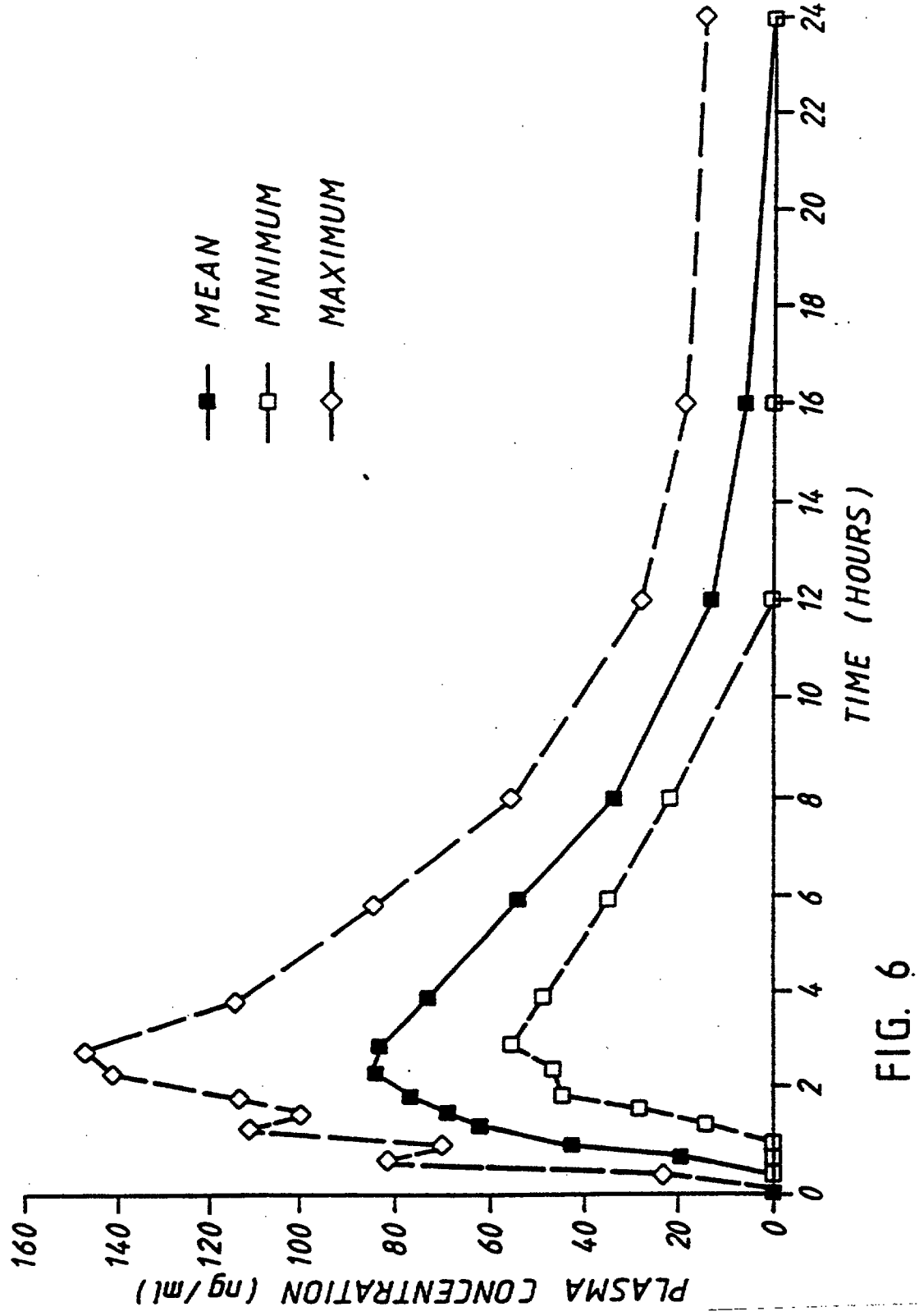

FIG. 6

This Sheet Has Been Replaced

REPLACED SHEETS SG
☑ Description : paged ...1.... to paged ...7.....
☑ Claim(s) : paged ...16.. to paged ...18.....
☐ Drawing(s) : paged ..... to paged .....
☐ Abstract : paged ..... to paged .....
DATE OF RECEIPT .....

REPLACEMENT SHEETS SG
☑ Description : paged ..1.. to paged ..15.
☑ Claim(s) : paged ..14 to paged ..17.
☑ Drawing(s) : paged ..1/4 to paged ..1/4
☑ Abstract : paged ..1 to paged ....
DATE OF RECEIPT ....11/3/97.....

SUBSTAINED RELEASE TABLETS CONTAINING BUPROPION

Bupropion hydrochloride (Wellbutrin^{R}) is a marketed antidepressant. It is chemically known as (±)-2-(tert-butylamino)-3'-chloropropiophenone hydrochloride. (See U.S. Patents 3.819.706 and 3.885.046). Also see Merck Index. Eleventh Edition. entry No. 1488.

In usage. bupropion hydrochloride is sold in the form of an instant release tablet wherein greater than 75% of bupropion hydrochloride is released from the tablet dissolution media in 45 minutes (See 1993 Physicians Desk Reference (PDR). pages 842 to 844). The PDR indicates bupropion hydrochloride as presently sold in an instant release tablet as being associated with seizures in approximately 0.4% (4/1000) patients treated at doses of up to 450 mg per day. In studies to date. the risk of seizures seem to be strongly associated. in part. with use of instant release tablets.

In order to reduce the seizure rate. it has been determined after experimentation that a controlled sustained release of bupropion hydrochloride should be employed.

Prior art with respect to this invention is to be found in U.S. Patent No. 4.687,660 which discloses controlled sustained release tablets containing bupropion hydrochloride.

The present invention provides an improved product in that it provides sustained release of the active ingredient as well as ease of manufacture over that disclosed in U.S. Patent 4.687.660.

After almost three years of work and testing, the present invention is now able to provide a controlled sustained release, sometimes also referred to as a sustained release (SR) tablet with improved properties and which has a shelf life over one year (i.e.. there is less than 10% loss most preferably less than about 5% loss (breakdown), of buproprion hydrochloride) in one year of storage at room temperature 15 to 25°C (59 to 77°F) at 35 to 60% relative humidity. For example, with a tablet containing 100 mg of bupropion hydrochloride (label strength) the tablet will preferably contain no less than about 95mg of bupropion hydrochloride after one year in storage (shelf

This Sheet Has Been Replaced
This is the replacement sheet
11 APR 1997
Date

life). As used herein. the term "tablet" includes the term "caplet". which is the word used to describe a tablet termed substantially in the shape of a capsule.

The oral administration of the controlled release tablets of this invention to treat depression in humans will be under the jurisdiction of the physician: however. tablets for a 75kg (150 pound) human will ordinarily be given one to three times per day to provide a total daily dosage of 100 to 450mg per day for a time period that the human patient requires same as determined by a physician. The tablets are swallowed by the human in the normal manner with the aid of water or other liquid. The tablets herein preferably have a round biconvex shape (which is preferred): however. this may be varied depending on the creativity of the tablet designer. With the tablets of this invention it is now possible to dose one or two times per day rather than the three times a day as presently done with the currently marketed product.

The present invention provides a sustained release tablet comprising bupropion hydrochloride and hydroxypropyl methylcellulose. the amount of hydroxypropyl methylcellulose to the amount of bupropion hydrochloride being from 0.19:1 to 1.1:1 respectively and the tablet being capable in water of releasing from 20 to 60 percent of the total amount of bupropion hydrochloride in 1 hour. from 50 to 95 percent of the total amount of bupropion hydrochloride in 4 hours and not less than 75 percent of the total amount of bupropion hydrochloride in 8 hours. Cysteine hydrochloride or glycine hydrochloride may also be included. Cysteine hydrochloride is more preferable than glycine hydrochloride. since it unexpectedly causes less discoloration to the tablet core. The amount of bupropion hydrochloride in each tablet is typically from 25mg to 500mg, with the tablet dose being more typically 50mg, 100mg or 150mg.

Methocel^{R} is the brand name for hydroxypropyl methylcellulose (HPMC) from Dow Chemical. Other companies also supply HPMC.

Specific embodiments of the invention will now be described by way of example with reference to the accompanying drawings in which:-

Fig. 1 is a top view of the preferred tablet shape of this invention:

This is the replacement sheet

Date 11 APR 1997

Fig. 2 is a side view of the tablet of Fig. 1:

Fig. 3 is a sectional view taken along line 3-3 in Fig. 1:

Fig. 4 is a graph showing plasma bupropion (as the free base) concentrations in nanograms/ml in adult male humans following a single dose of two 50mg bupropion HCl (SR) tablets. divided by two over 24 hours from time of administration provided by the 50mg tablet example of this invention:

Fig. 5 is a graph showing plasma bupropion (as the free base) concentrations in nanograms/ml in adult male humans following a single dose of one 100mg bupropion HCl (SR) tablets over 24 hours provided by the 100mg tablet example of this invention: and

Fig. 6 is a graph showing plasma bupropion (as the free base) concentrations in nanograms/ml in adult male humans following a single 150mg tablet over 24 hours provided by the 150mg (SR) tablet example of this invention.

In order to prepare the controlled sustained release (SR) tablets of this invention. particles of bupropion hydrochloride are preferably blended with microcrystalline cellulose and hydroxypropyl methylcellulose (Methocel) to form an admixture of blended powders. A 20 mesh sieve is conveniently used to screen the bupropion hydrochloride particles. cellulose particles and hydroxypropyl methylcellulose particles prior to blending the ingredients. Then the cysteine hydrochloride or glycine hydrochloride is dissolved in water to form a granulating solution. Thereafter. the granulating solution is preferably sprayed onto the blended powders. which are then dried. A lubricant such as magnesium stearate is added and intermixed (blended) with the blended powders having the granulating solution dried thereon. Other suitable fillers include the following: lactose. starch. Microcrystalline cellulose is also preferably added to the product to provide compressibility. Compression of the mixture in a punch and die is then used to form the tablet core.

Thereafter. the tablet (sometimes referred to as the core) is preferably film coated with a colored coating such as a Opadry Purple. Opadry Blue or Opadry White for identification. taste masking, and appearance purposes to provide a film coated tablet.

This is the replacement sheet

Date: 11 APR 1997

The film coating does not substantially affect the release rate of the bupropion hydrochloride from the tablet. since the coating is instant release which rapidly dissolves in the stomach. The outer film coating is typically 0.03mm to 0.10mm in thickness.

In the practice of this invention. for every part by weight of bupropion hydrochloride. the amount of hydroxypropyl methylcellulose is 0.19 to 1.1 and more preferably 0.26 to 0.68 parts by weight and the amount of cysteine hydrochloride or glycine hydrochloride is 0.02 to 0.27 and more preferably 0.05 to 0.16 parts by weight. For example. in a tablet containing 100mg of bupropion hydrochloride. the amount of hydroxypropyl methylcellulose is 19mg to 110mg and most preferably 26.7 to 68mg and the amount of cysteine hydrochloride or glycine hydrochloride is 2.7mg to 27mg and most preferably 5mg to 16.2mg.

The surface area to volume of the non film-coated or core portion of the tablets herein is important in maintaining the appropriate controlled sustained release rates.

The ratio of the surface area of the non film coated tablet (sometimes referred to as the core) surface area to tablet volume is preferably 3:1 to 25:1cm^{-1} and more preferably 7:1 to 16:1cm^{-1} for tablets of 50. 100 and 150mg bupropion hydrochloride content. For tablets of 50mg bupropion HCl content the ratio of the tablet surface area to tablet volume is most preferably 13:1 to 16:1cm^{-1} and for the 100mg bupropion HCl content tablet the ratio is most preferably 9:1 to 12:1cm^{-1} and for the 150mg bupropion HCl content tablet the ratio is most preferably 7:1 to 10:1cm^{-1}.

The release rate of bupropion hydrochloride from the sustained release (SR) tablets disclosed (whether or not film coated) herein in distilled water is preferably as follows:

about 20% to about 60% (most preferably 25 to 50%) in 1 hour:

about 50% to 95% (most preferably 60 to 95%) in 4 hours:

and

This is the replacement sheet

Date 11 APR 1997

not less than about 75% (most preferably not less than 80%) in 8 hours. For the bupropion HCl 50mg content tablet the release rate of bupropion HCl is preferably 30 to 50% in 1 hour. 70 to 95% in 4 hours and not less than 80% in 8 hours. For the 100mg bupropion HCl content tablet the release rate is preferably 25 to 45% in 1 hour. 60 to 85% in 4 hours and not less than 80% in 8 hours. With the 150mg content tablet the release rate is preferably 25 to 45% in 1 hour. 60 to 75% in 4 hours and not less than 85% in 8 hours.

The test conditions and apparatus to determine the drug release (dissolution) rates of buproprion hydrochloride are as follows:

Apparatus: USP Rotating Paddle (Apparatus II):
Stirring Rate: 50 rpm:
Sample Size: a single unweighted tablet per vessel:
Temperature: 37°C ± 0.5°C
Medium for Dissolution of tablet: 900 ml of distilled water.

The test for dissolution (release rates) is performed as specified below in the U.S. Pharmacopoeia under "Drug Release" and the medium is sampled at 1, 4 and 8 hours.

Sample Preparation: Withdraw a measured portion of the dissolution medium not to exceed 10ml at each sampling point without replacement. Filter the sample through a LID/X GMF 0.45 micron filter or a Zymark 10 micron filter (or equivalent).

Standard Preparation: Accurately weigh approximately 50mg of Bupropion Hydrochloride Reference Standard and transfer into 900ml volumetric flask. Dissolve in and dilute to volume with water and mix (nominal concentration: 0.0556mg bupropion hydrochloride per ml).

Instrumental Conditions:

Instrument:	An appropriate HPLC equipped with a 10-µl sampling loop
Column:	BDS Hypersil C18, 5 micron (50x4.6mm) column, or SUPELCOSIL LC-18-DB, 3 micron (33x4.6mm), or equivalent
Flow Rate:	2.0ml/min

This is the replacement sheet

Date: 11 APR 1997

Detection: UV. 224nm. 0.1 AUFS or an appropriate AUFS setting

Mobile Phase: Methanol:pH 7.0 phosphate buffer (65:35) appropriately filtered and degassed.

System Suitability Test: Replicate injections of the Standard Preparation give relative standard deviations for peak retention times and peak responses no greater than 2 percent. The tailing factor (T.USP) for the bupropion peak is not greater than 2.5.

Ph 7.0 Phosphate Buffer Preparation: Transfer 27.22g of monobasic potassium phosphate into a 1000-ml volumetric flask. Dissolve in and dilute to volume with water and mix. Transfer 250ml of this solution into a 1000-ml of 0.291 M sodium hydroxide. dilute to volume with water and mix.

Calculation

Step I - Determination of Bupropion Hydrochloride Concentration

% Nominal Bupropion Hydrochloride (0.0556mg/ml) =

$$\frac{\text{SPL Pk Response}}{\text{STD Pk Response}} \times \frac{\text{STD Wt}}{900} \times \frac{900}{L.S} \times 100$$

Step II - Sampling Volume Corrections

Perform the following calculations to adjust for sample removal. (Evaporation is insignificant over an 8-hour period when using the Zymate II Automated Dissolution Testing System).

% L.S. Bupropion Hydrochloride released (50mg tablet) =

$$\frac{900 - nv}{900} \times \% \text{ nominal bupropion hydrochloride (sample (n-1))} =$$

$$\frac{v \sum_{i=1}^{n}}{900} \% \text{ nominal bupropion hydrochloride (sample (i))}$$

where

n = number of previous samples taken

This is the replacement sheet

Date: 11 APR 1997

v = volume of sample taken each time
These calculations can be performed using the BASIC program "DISTAB".

The tablet also preferably includes as other ingredients, e.g., lubricating agents for ease in manufacture and fillers for ease of manufacturing and to bulk the tablet to provide the desired size.

The tablet is also preferably coated with an instant release coating for appearance, taste masking, and product identification e.g. Opadry Purple, Blue or White, which will dissolve in the stomach and not substantially affect bupropion hydrochloride release rates and bupropion hydrochloride stability.

Hydroxypropyl Methylcellulose 2910, USP used in the examples, conforms to 28.0 to 30.00% methoxyl substitution and 7.0 to 12.0% hydroxypropoxyl substitution. The preferred nominal viscosity of 2% solution in water is not less than 3,000 centipoise and not more than 5,600 centipoise. It is supplied by Dow Chemical Company, Midland, MI as Methocel E4M premium CR.

Microcrystalline cellulose, NF supplied by FMC Corporation as Avicel PH 102, has an average particle size of 90 micrometers with particle size specification of 8% $\geq$ 60 mesh and 45% $\leq$ 200 mesh.

Opadry^{R} Purple YS-1-4845 is supplied by Colorcon, Inc., contains FD&C Red No. 40 aluminum lake, hydroxypropyl methycellulose, titanium dioxide, polyethylene glycol, olysorbate 80, and FD&C Blue No. 2 Aluminum Lake.

Opadry^{R} Blue YS-1-4282 is supplied Colorcon, Inc., contains FD&C Blue No. 1 aluminum lake, hydroxypropyl methycellulose, titanium dioxide, polyethylene glycol, and polysorbate 80.

Opadry^{R} White YS-1-7059 is supplied by Colorcon, Inc., contains hydroxypropyl methylcellulose, titanium dioxide, and polyethylene glycol.

This is the replacement sheet

11 APR 1997

Date:

Reference should now be had to Figs. 1 to 3 for a description of the preferred form of the biconvex film coated tablets of this invention which contain as the active ingredient (drug) 50mg. 100mg or 150mg of bupropion HCl. The tablet (core) is shown at 10 and the film coating is shown at 11 in Fig.3

Tablets having the following dimensions as set forth below for the 50mg, 100mg and 150mg bupropion HCl content tablets in which the letters D (diameter). T (thickness). L (land). C (cap depth) and the R (radius of curvature of the biconvex region) are shown in Figs. 1 to 3.

	50mg	100mg	150mg
R in mm (inches)	10.41 (.410)	12.15 (.4783)	15.34 (.604)
D in mm (inches)	7.40 (.2913)	9.40 (.3701)	11.00 (.4331)
C in mm (inches)	0.66 (.026)	0.91 (.036)	0.99 (.039)
T in mm	3.40	4.32	4.65
L in mm (inches)	0.51 (.002)	0.076 (.003)	0.076 (.003)

Reference now should be had to Figs. 4. 5 and 6 which illustrate plasma bupropion levels. as the free base i.e. the compound bupropion itself (see the Merck Index. Eleventh Edition entry No. 1488) after oral administration to adult males (humans) of 50mg, 100mg and 150mg bupropion HCl film coated tablets of the examples herein. It is to be understood that because of the naure of the film coating. the release rate will be substantially the same whether or not the tablets are film-coated and. therefore. the data is also representative of non film coated tablets disclosed herein.

In particular. Fig. 4 represents plasma levels (divided by 2) of bupropion after oral dosage with two 50mg SR tablets in 21 male (human) patients 18 to 40 years of age weighing 66 to 92kg (132 to 184lbs). The maximum level shown is detected in the blood plasma at least one of the patients and the minimum being that detected in the blood plasma at least one of the patients and the mean being the average of all measurements of all participants.

The bupropion plasma levels for the 50mg tablet dosing measured over 24 hours as in this figure were done as described in the radioimmunoassay test set forth in the article Radioimmunoassay And Pharmacokinetic Profile of Bupropion In The Dog by Robert

This is the replacement sheet

Date: 11 APR 1997

F. Butz *et al.* published in the Journal of Pharmacology and Experimental Therapeutics. Vol. 217. No. 3 (1981).

Fig. 5 is a repeat with respect to Fig. 4; however a single oral dose of a 100mg SR tablet of this disclosure's example was administered to the same group of males as those tested previously in Fig. 4; however. the bupropion plasma levels were not divided in two. The plasma levels were also measured at the time intervals shown using the test procedure described in the aforementioned Butz *et al.* article.

Fig. 6 represents oral dosing of 24 male (human) patients. ages 20 to 39 years. weight 68 to 98kg (136 to 196lbs). Each of the males was dosed once with a 150mg bupropion HCl SR tablet and bupropion plasma level measurements were made as shown on the plot of Fig. 6 at the time intervals shown to arrive at the maximum. minimum for any patient and the mean (average) for all patients in the test.

The measurements using the 150mg tablets of the examples were determined following the procedure described in the article entitled "Determination of Bupropion and Its Major Basic Metabolites in Plasma by Liquid Chromatography with Dual - Wavelength Ultraviolet Detection" by Thomas B. Cooper *et al.* published in Journal of Pharmaceutical Sciences. Vol. 73. No. 8. August 1984. The results were not divided by two as with the Fig. 4 results.

It should be understood that variations may occur in biological measurements from test to test. It should also be understood that the tablet measurements may change somewhat without departing from the spirit of the invention and that the tablet dimensions will also vary because of variability in materials. manufacturing processes. and tolerance achievable.

It should be understood that the outer coating on the core is preferred in this invention but is not a required feature of the invention herein.

This is the replacement sheet
11 APR 1997
Date:

EXAMPLE 1

PREPARATION OF 150MG BUPROPION HCL CONTENT TABLETS

CORE INGREDIENTS	mg/tablet	kg/batch
Bupropion Hydrochloride	150.0	150.0
Microcrystalline Cellulose. NF	198.5	198.5
Hydroxypropyl Methylcellulose 2910. USP	40.00	40.00
Cysteine Hydrochloride. USP	7.50	7.50
Magnesium Stearate. NF	4.00	4.00
Purified Water. USP	q.s.	q.s
	400.0 mg	
Surface Area to Volume Ratio	$8.818cm^{-1}$	
Volume	$0.3656cm^{3}$	
Surface Area	$3.224cm^{2}$	

COATING INGREDIENTS		
Opadry Purple YS-1-4845	16.00	20.00kg*
*Includes 25% overage.		
Purified Water. USP	q.s	180.00kg
Carnauba Wax. NF	0.04	0.04k

Coating thickness≈ 0.05 - 0.10mm for all tablets of the examples.

"q.s." means sufficient quantity in the examples.

TYPICAL MANUFACTURING PROCEDURE AND ASSEMBLING PROCESS

Bupropion Hydrochloride Sustained-Release Tablets. 150mg Bupropion Hydrochloride per coated Tablet.

1. Sift and blend the following:
   bupropion hydrochloride
   microcrystalline cellulose
   hydroxypropyl methylcellulose

2. Dissolve the cysteine hydrochloride in the purified water.

This is the replacement sheet

Date: 11 APR 1997

3. Spray the solution from Step 2 onto the blended powders from Step 1 using a fluid bed granulator. Additional purified water may be used, if necessary, to obtain proper granule wetness.

4. Dry the granules.

5. Add magnesium stearate to the granules and mill.

6. Blend the milled granules.

7. Compress the granules at approximately 400.0mg or a weight equivalent to 150mg bupropion hydrochloride on a rotary press fitted with 11.0mm round punches and dies, the upper and lower punches plain.

8. Prepare a film-coating suspension of Opadry Purple YS-1-4845 dispersed in purified water.

9. Spray the coating suspension onto the core tablets using suitable coating equipment until the desired weight gain is achieved.

10. Polish the coated tablets in the coating equipment using carnauba wax.

EXAMPLE 2

PREPARATION OF 100MG BUPROPION HCl CONTENTS TABLETS

CORE INGREDIENTS	mg/tablet	kg/batch
Bupropion Hydrochloride	100.00	150.0
Microcrystalline Cellulose, NF	97.00	145.5
Hydroxypropyl Methylcellulose 2910, USP	54.00	81.00
Cysteine Hydrochloride, USP	16.20	24.30
Magnesium Stearate, NF	2.800	4.200
Purified Water, USP	q.s	100.0
	270.0mg	

This is the replacement sheet

Date: 11 APR 1997

Surface Area to Volume Ratio	$10.89cm^{-1}$	
Volume	$0.2766cm^3$	
Surface Area	$3.013cm^2$	

COATING INGREDIENTS		
Opadry Blue YS-1-4282	10.00	20.00*
*Includes 33.3% overage		
Purified Water, USP	q.s	180.0
Carnauba Wax, NF	0.02667	.040
	280.03mg	

Coating thickness ≈ 0.05 - 0.10mm

TYPICAL MANUFACTURING PROCEDURE AND ASSEMBLING PROCESS

Bupropion Hydrochloride Sustained-Release Tablets, 100mg Bupropion Hydrochloride Per Coated Tablet.

1. Sift and blend the following:
   bupropion hydrochloride
   microcrystalline cellulose
   hydroxypropyl methylcellulose.

2. Dissolve the cysteine hydrochloride in the purified water.

3. Spray the solution from Step 2 onto the blended powders from Step 1 using a fluid bed granulator. Additional purified water may be used, if necessary, to obtain proper granule wetness.

4. Dry the granules.

5. Add magnesium stearate to the granules and mill.

6. Blend the milled granules.

This is the replacement sheet

Date: 11 APR 1997

7. Compress the granules at approximately 270.0mg or a weight equivalent to 100mg bupropion hydrochloride on a rotary press fitted with 9.4mm round punches and dies. the upper and lower punches plain.

8. Prepare a film-coating suspension of Opadry Blue. YS-1-4282 dispersed in purified water.

9. Spray the coating suspension onto the core tablets using suitable coating equipment until the desired weight gain is achieved.

10. Polish the coated tablets in the coating equipment using carnauba wax.

EXAMPLE 3

PREPARATION OF 50MG BUPROPION HCL CONTENT TABLETS

CORE INGREDIENTS	mg/tablet	kg/batch
Bupropion Hydrochloride	50.0	150.0
Microcrystalline Cellulose NF	41.50	124.5
Hydroxypropyl Methylcellulose 2910. USP	34.00	102.0
Cysteine Hydrochloride. USP	8.100	24.30
Magnesium Stearate. NF	1.400	4.200
Purified Water. USP	q.s	q.s
	135.0mg	
Surface Area to Volume Ratio	$14.37cm^{-1}$	
Volume	$0.1386cm^3$	
Surface Area	$1.9914cm^2$	
COATING INGREDIENTS		
Opadry White YS-1-7059	5.000	20.00*
Purified Water. USP	q.s	180.0
Carnauba Wax. NF	0.01333	0.040
	140.0mg	

This is the replacement sheet

Date: 11 APR 1997

*Includes 33.3% overage
Coating thickness ≈ 0.03 - 0.07mm

TYPICAL MANUFACTURING PROCEDURE AND ASSEMBLING PROCESS

Bupropion Hydrochloride Sustained-Release Tablets. 50mg Bupropion Hydrochloride Per Coated Tablet

1. Sift and blend the following:

   bupropion hydrochloride
   microcrystalline cellulose
   hydroxypropyl methylcellulose.

2. Dissolve the cysteine hydrochloride in the purified water.

3. Spray the solution from Step 2 onto the blended powders from Step 1 using a fluid bed granulator. Additional purified water may be used. if necessary, to obtain proper granule wetness.

4. Dry the granules.

5. Add magnesium stearate to the granules and mill.

6. Blend the milled granules.

7. Compress the granules at approximately 135.0mg or a weight equivalent to 50mg bupropion hydrochloride on a rotary press fitted with 7.4mm round punches and dies. the upper and lower punches plain.

8. Prepare a film-coating suspension of Opadry White. YS-1-7059 dispersed in purified water.

9. Spray the coating suspension onto the core tablets using suitable coating equipment until the desired weight gain is achieved.

This is the replacement sheet

Date: 11 APR 1997

10. Polish the coated tablets in the coating equipment using carnauba wax.

This is the replacement sheet

Date: 11 APR 1997

This Sheet Has Been Replaced

* C L M S *

CLAIMS

1. A sustained release tablet comprising bupropion hydrochloride and hydroxypropyl methylcellulose, the amount of hydroxypropyl methylcellulose to the amount of bupropion hydrochloride being from 0.19 : 1 to 1.1 : 1 respectively and the tablet being capable in water of releasing from 20 to 60 percent of the total amount of bupropion hydrochloride in 1 hour, from 50 to 95 percent of the total amount of bupropion hydrochloride in 4 hours and not less than 75 percent of the total amount of bupropion hydrochloride in 8 hours.

2. A sustained release tablet according to claim 1, wherein the amount of hydroxypropyl methylcellulose to the amount of bupropion hydrochloride is 0.26:1 to 0.68:1, the tablet being capable in water of releasing from 25 to 50 percent of the total amount of bupropion hydrochloride in 1 hour and from 60 to 95 percent of the total amount of bupropion hydrochloride in 4 hours.

3. A sustained release tablet according to either of claims 1 and 2, wherein bupropion hydrochloride is present in an amount of from 25 to 500 mg.

4. A sustained release tablet according to claim 3, containing from 50 to 150mg of bupropion hydrochloride.

5. A sustained release tablet according to any of claims 1 to 4, wherein said tablet has a surface area to volume ratio of 3:1 to 25:1cm^{-1}.

6. A sustained release tablet according to claim 5, wherein said surface area to volume ratio is 7:1 to 16:1cm^{-1}.

7. A sustained release tablet according to any of the preceding claims comprising glycine hydrochloride or cysteine hydrochloride.

8. A sustained release tablet according claim 7, wherein the amount of cysteine hydrochloride or glycine hydrochloride to one part of bupropion hydrochloride is 0.02 to 0.27.

This is the replacement sheet

Date: 11 APR 1997

* C L M S *

9. A sustained release tablet according to claim 7 or 8. wherein the amount of cysteine hydrochloride or glycine hydrochloride to one part of bupropion hydrochloride is 0.05 to 0.16.

10. A sustained release tablet according to any of the preceding claims. wherein said tablet has less than 10% degradation of bupropion hydrochloride when stored for one year at 15 to 25°C and 35% to 60% relative humidity.

11. A sustained release tablet according to claim 10. wherein said tablet has less than 5% degradation of bupropion hydrochloride.

12. A sustained release tablet according to any of the preceding claims. wherein the tablet has an instant release film coating.

13. A sustained release tablet according to any preceding claim. containing 50mg of bupropion hydrochloride.

14. A sustained release tablet according to any preceding claim, containing 100mg of bupropion hydrochloride.

15. A sustained release tablet according to any preceding claim. containing 150mg of bupropion hydrochloride.

16. A sustained release tablet according to claim 13, releasing between 30 to 50 percent of bupropion hydrochloride in 1 hour. 70 to 95 percent in 4 hours and not less than 80 percent in 8 hours. said tablet having a surface area to volume ratio of 13:1 to 16:1cm^{-1} .

17. A sustained release tablet according to claim 14. releasing between 25 to 45 percent of bupropion hydrochloride in 1 hour. 60 to 85 percent in 4 hours and not less than 80 percent in 8 hours. said tablet having a surface area to volume ratio of 9:1 to 12:1cm^{-1}.

18. A sustained release tablet according to claim 15, releasing 25 to 45 percent of bupropion hydrochloride in 1 hour. 60 to 75 percent in 4 hours and not less

This is the replacement sheet

Date: 11 APR 1997

* C L M S *

than 85 percent in 8 hours. said tablet having a surface area to volume ratio of 7:1 to 10:1cm^{-1}.

19. A sustained release tablet comprising 100mg of bupropion hydrochloride. 19 to 110mg of hydroxypropyl methylcellulose and 2.7 to 27mg of cysteine hydrochloride or glycine hydrochloride.

20. A sustained release tablet comprising 100mg of bupropion hydrochloride. 26 to 68mg of hydroxypropyl methycellulose and 5 to 16.2mg of cysteine hydrochloride or glycine hydrochloride.

21. A sustained release tablet according to any of the preceding claims for use in the treatment of depression in a human being.

This Sheet Has Been Replaced



This is the replacement sheet

Date: 11 APR 1997

SUSTAINED RELEASE TABLETS CONTAINING BUPROPION

ABSTRACT

A controlled sustained release tablet having at least one year shelf life and containing bupropion hydrochloride, hydroxypropyl methylcellulose and cysteine hydrochloride or glycine with the tablet having a surface area to volume ratio to effectively control bupropion hydrochloride release in the body.

This is the replacement sheet
Date: 11 APR 1997

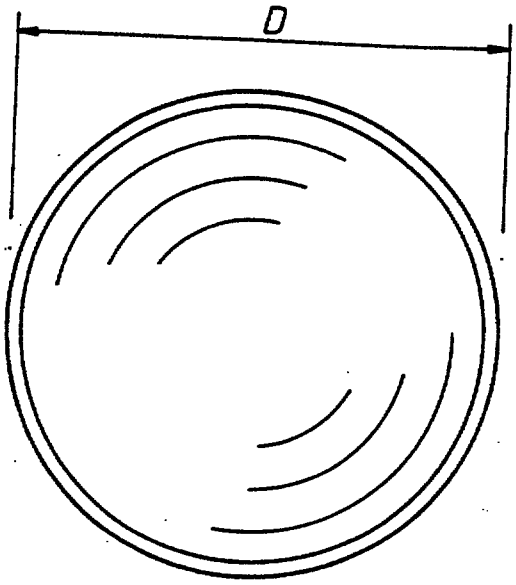

FIG. 1

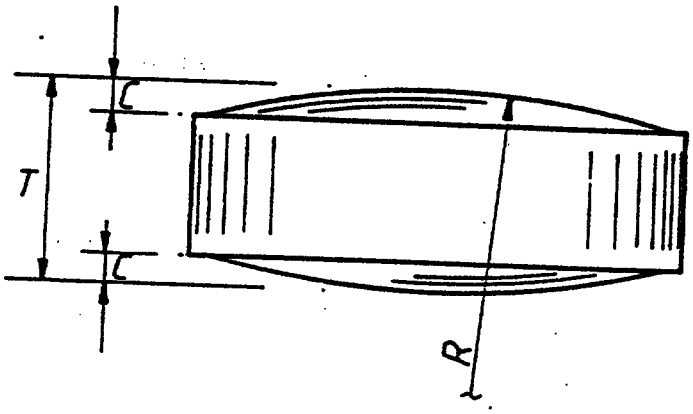

FIG. 2

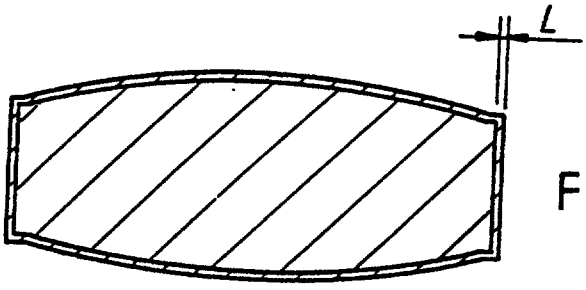

FIG. 3

This is the replacement sheet

Date: 11 APR 1997

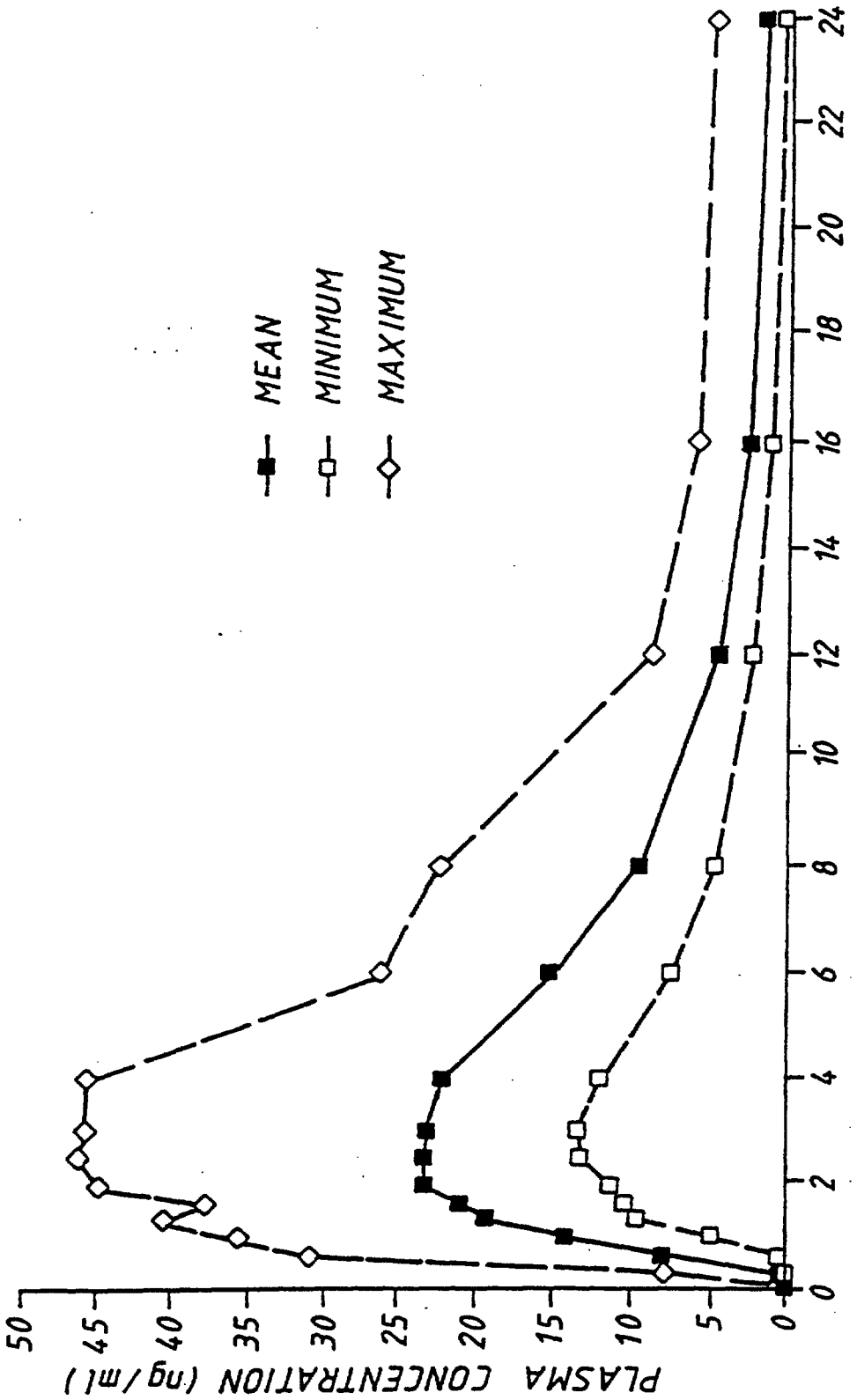

FIG. 4

This is the replacement sheet

Date: 11 APR 1997

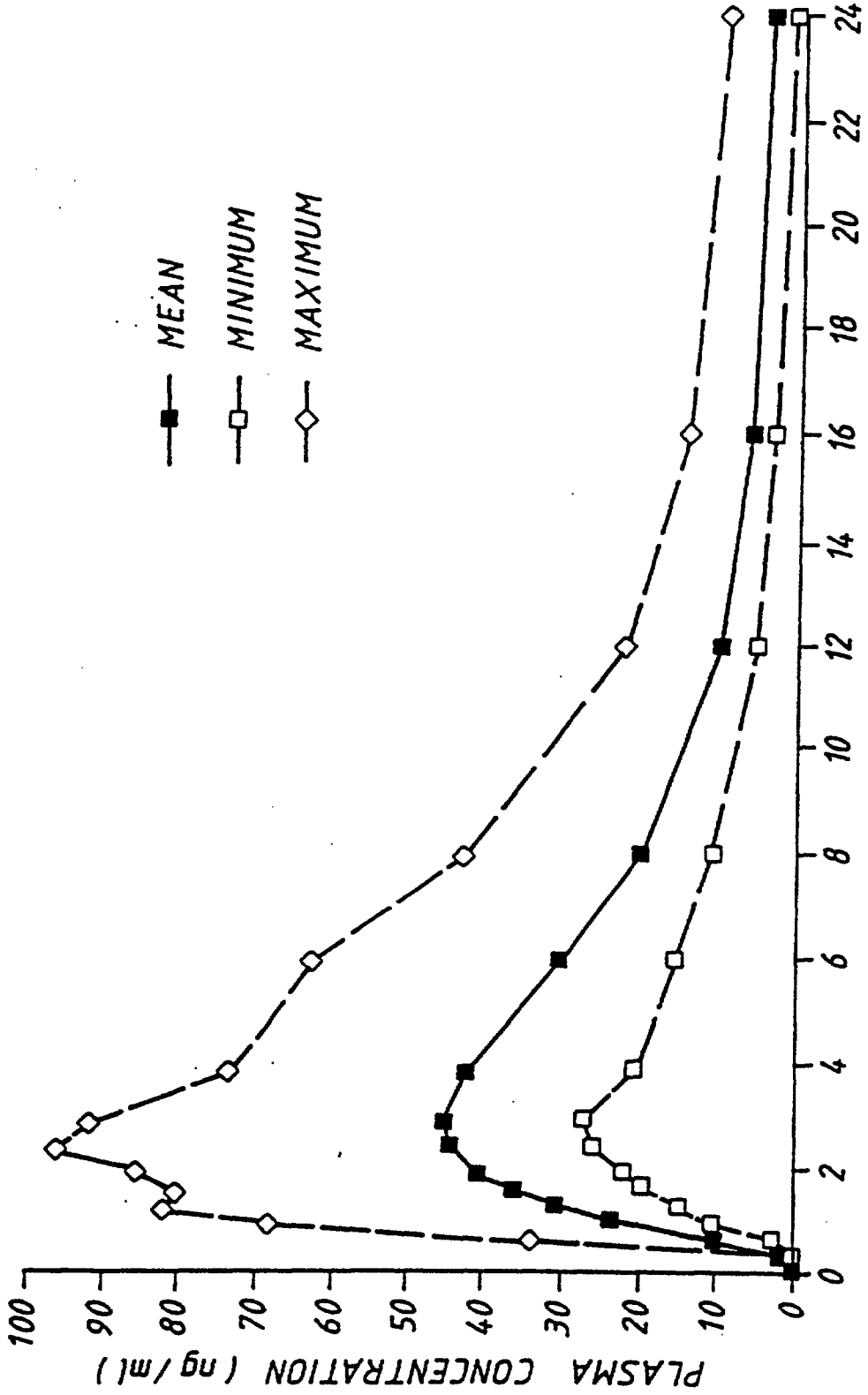

FIG. 5

This is the replacement sheet

Date: 11 APR 1997

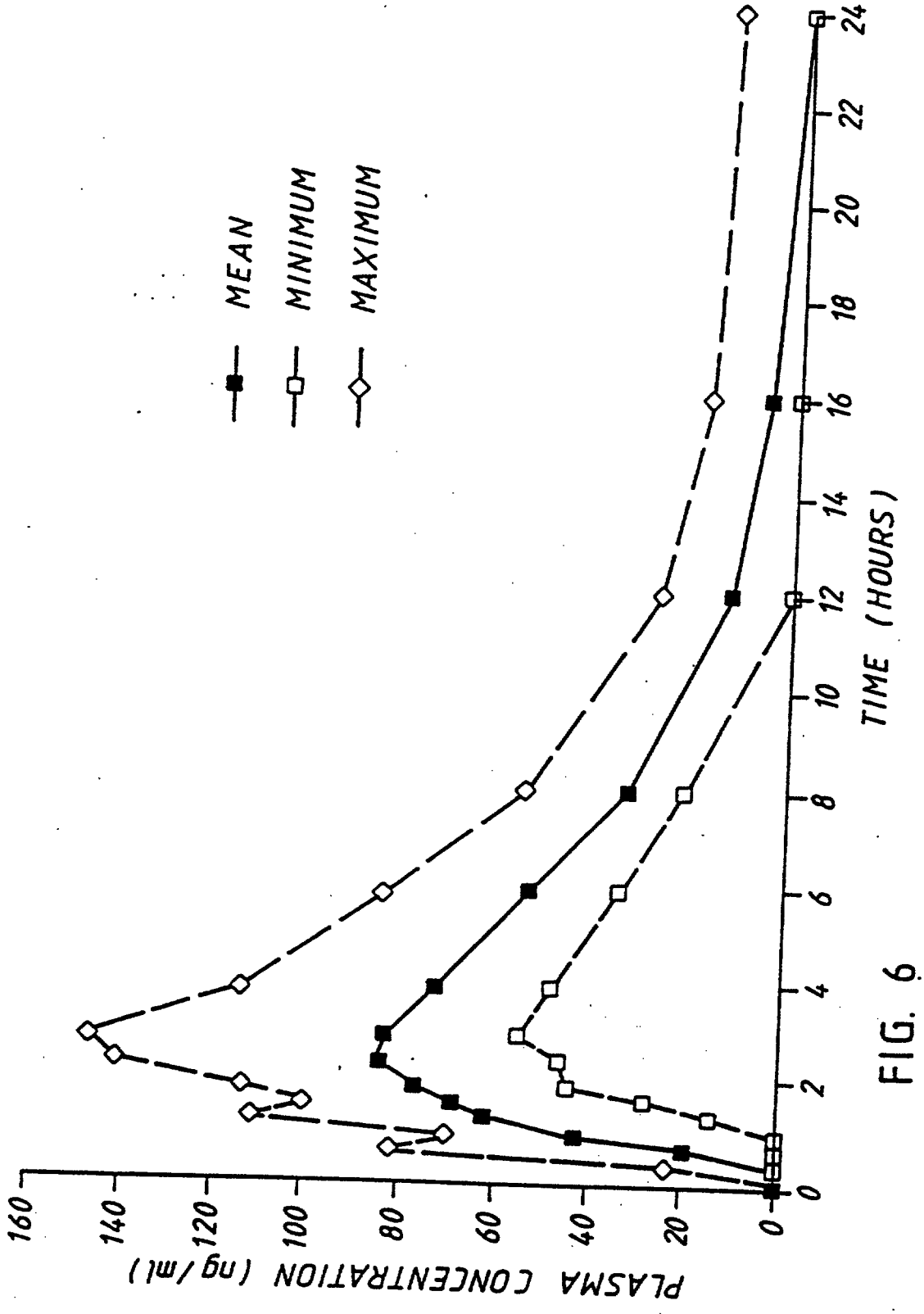

FIG. 6.

This is the replacement sheet

Date: 11 APR 1997

960576-9 IPOS

REPLACEMENT SHEETS SG
☑ Description : paged ..1.. to paged .....
☑ Claim(s) : paged ..16.. to paged ..18..
☐ Drawing(s) : paged ..... to paged .....
☐ Abstract : paged ..... to paged .....
DATE OF RECEIPT 2/2/99

REPLACEMENT SHEET

* C L M S *

CLAIMS

1. A sustained release tablet comprising bupropion hydrochloride and hydroxypropyl methylcellulose, the amount of hydroxypropyl methylcellulose to the amount of bupropion hydrochloride being from 0.19:1 to 1.1:1 respectively and the tablet being capable in water of releasing from 20 to 60 percent of the total amount of bupropion hydrochloride in 1 hour, from 50 to 95 percent of the total amount of bupropion hydrochloride in 4 hours and not less than 75 percent of the total amount of bupropion hydrochloride in 8 hours.

2. A sustained release tablet according to claim 1, wherein the amount of hydroxypropyl methylcellulose to the amount of bupropion hydrochloride is 0.26:1 to 0.68:1, the tablet being capable in water of releasing from 25 to 50 percent of the total amount of bupropion hydrochloride in 1 hour and from 60 to 95 percent of the total amount of bupropion hydrochloride in 4 hours.

3. A sustained release tablet according to either of claims 1 and 2, wherein bupropion hydrochloride is present in an amount of from 25 to 500 mg.

4. A sustained release tablet according to claim 3, containing from 50 to 150 mg of bupropion hydrochloride.

5. A sustained release tablet according to any of claims 1 to 4, wherein said tablet has a surface area to volume ratio of 3:1 to 25:1 cm^{-1}.

This is the replacement sheet

Date: 02 FEB 1999

REPLACEMENT SHEET

6. A sustained release tablet according to claim 5, wherein said surface area to volume ratio is 7:1 to 16:1 cm^{-1}.

7. A sustained release tablet according to any of the preceding claims, comprising glycine hydrochloride or cysteine hydrochloride.

8. A sustained release tablet according to any of the preceding claims, wherein said tablet has less than 10% degradation of bupropion hydrochloride when stored for one year at 15 to 25°C and 35% to 60% relative humidity.

9. A sustained release tablet according to any preceding claims, containing 50mg of bupropion hydrochloride and which releases between 30 to 50 percent of bupropion hydrochloride in 1 hour, 70 to 95 percent in 4 hours and not less than 80 percent in 8 hours, said tablet having a surface area to volume ratio of 13:1 to 16:1 cm^{-1}.

10. A sustained release tablet according to any of claims 1 to 8, containing 100mg of bupropion hydrochloride and which releases between 25 to 45 percent of bupropion hydrochloride in 1 hour, 60 to 85 percent in 4 hours and not less than 80 percent in 8 hours, said tablet having a surface area to volume ratio of 9:1 to 12:1 cm^{-1}.

11. A sustained release tablet according to any of claims 1 to 8, containing 150mg of bupropion hydrochloride and which releases 25 to 45 percent of bupropion

This is the replacement sheet

Date: 02 FEB 1999

* C L M S *

REPLACEMENT SHEET

hydrochloride in 1 hour, 60 to 75 percent in 4 hours and not less than 85 percent in 8 hours, said tablet having a surface area to volume ratio of 7:1 to 10:1 cm^{-1}.

12. A sustained release tablet comprising 100mg of bupropion hydrochloride, 19 to 110mg of hydroxypropyl methylcellulose and 2.7 to 27mg of cysteine hydrochloride or glycine hydrochloride.

13. A sustanined release tablet according to any of the preceding claims, for use in the treatment of depression in a human being.

This is the replacement sheet

Date: 02 FEB 1999

9605086-9 IPOS

REPLACEMENT SHEET

10 MAR 1999

SUSTAINED RELEASE TABLETS CONTAINING BUPROPION

Bupropion hydrochloride (Wellbutrin®) is a marketed antidepressant. It is chemically known as (±)-2-(tert-butylamino)-3'-chloropropiophenone hydrochloride. (See U.S. Patents 3,819,706 and 3,885,046). Also see Merck Index, Eleventh Edition, entry No. 1488.

In usage, bupropion hydrochloride is sold in the form of an instant release tablet wherein greater than 75% of bupropion hydrochloride is released from the tablet dissolution media in 45 minutes (See 1993 Physicians Desk Reference (PDR), pages 842 to 844). The PDR indicates bupropion hydrochloride as presently sold in an instant release tablet as being associated with seizures in approximately 0.4% (4/1000) patients treated at doses of up to 450 mg per day. In studies to date, the risk of seizures seem to be strongly associated, in part, with use of instant release tablets.

In order to reduce the seizure rate, it has been determined after experimentation that a controlled sustained release of bupropion hydrochloride should be employed.

Prior art with respect to this invention is to be found in U.S. Patent No. 4,687,660 which discloses controlled sustained release tablets containing bupropion hydrochloride.

The present invention provides an improved product in that it provides sustained release of the active ingredient as well as ease of manufacture over that disclosed in U.S. Patent 4,687,660.

After almost three years of work and testing, the present invention is now able to provide a controlled sustained release, sometimes also referred to as a sustained release (SR) tablet with improved properties and which has a shelf life over one year (i.e., there is less than 10% loss most preferably less than about 5% loss (breakdown), of buproprion hydrochloride) in one year of storage at room temperature 15 to 25°C (59 to 77°F) at 35 to 60% relative humidity. For example, with a tablet containing 100 mg of bupropion hydrochloride (label strength) the tablet will preferably contain no less than about 95mg of bupropion hydrochloride after one year in storage (shelf