(12) INTERNATIONAL APPLICATION PUBLISHED UNDER THE PATENT COOPERATION TREATY (PCT)

(19) World Intellectual Property Organization
International Bureau

(43) International Publication Date
25 September 2025 (25.09.2025)

WIPO | PCT

(10) International Publication Number
WO 2025/198909 A1

(51) International Patent Classification:
H04L 9/08 (2006.01) *H04L 9/32* (2006.01)
H04L 9/30 (2006.01)

(21) International Application Number:
PCT/US2025/019514

(22) International Filing Date:
12 March 2025 (12.03.2025)

(25) Filing Language: English

(26) Publication Language: English

(30) Priority Data:
20240100205 20 March 2024 (20.03.2024) GR

(71) Applicant: **VISA INTERNATIONAL SERVICE ASSOCIATION** [US/US]; P.O. Box 8999, San Francisco, California 94128 (US).

(72) Inventors: **CHATZIGIANNIS, Panagiotis**; P.O. Box 8999, San Francisco, California 94128 (US). **ALQRAINI, Wassif**; P.O. Box 8999, San Francisco, California 94128 (US). **MINAEI BIDGOLI, Mohammad Mohsen**; P.O. Box 8999, San Francisco, California 94128 (US). **COOLING, Peter**; P.O. Box 8999, San Francisco, California 94128 (US).

(74) Agent: **JEWIK, Patrick** et al.; 1100 Peachtree Street, NE Suite 2800, Atlanta, Georgia 30309 (US).

(81) Designated States *(unless otherwise indicated, for every kind of national protection available)*: AE, AG, AL, AM, AO, AT, AU, AZ, BA, BB, BG, BH, BN, BR, BW, BY, BZ, CA, CH, CL, CN, CO, CR, CU, CV, CZ, DE, DJ, DK, DM, DO, DZ, EC, EE, EG, ES, FI, GB, GD, GE, GH, GM, GT, HN, HR, HU, ID, IL, IN, IQ, IR, IS, IT, JM, JO, JP, KE, KG, KH, KN, KP, KR, KW, KZ, LA, LC, LK, LR, LS, LU, LY, MA, MD, MG, MK, MN, MU, MW, MX, MY, MZ, NA, NG, NI, NO, NZ, OM, PA, PE, PG, PH, PL, PT, QA, RO, RS, RU, RW, SA, SC, SD, SE, SG, SK, SL, ST, SV, SY, TH, TJ, TM, TN, TR, TT, TZ, UA, UG, US, UY, UZ, VC, VN, WS, ZA, ZM, ZW.

WO 2025/198909 A1

(54) **Title:** METHOD AND SYSTEM FOR KEY RECOVERY USING GROUP STRUCTURE

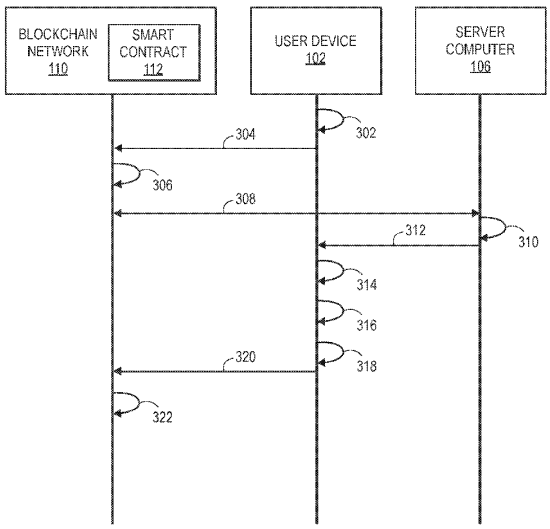

FIG. 3

(57) **Abstract:** A method includes a user device generating a key recovery message comprising a public key or an identifier thereof associated with an account. The public key corresponding to a first private key associated with the user device. The user device can provide the key recovery message to a smart contract on a blockchain. The user device can receive a recovery detected message from a server computer that monitors the smart contract. After providing the key recovery message to the smart contract, the user device can generate a new private key to replace the first private key.

[Continued on next page]

(84) **Designated States** *(unless otherwise indicated, for every kind of regional protection available)*: ARIPO (BW, CV, GH, GM, KE, LR, LS, MW, MZ, NA, RW, SC, SD, SL, ST, SZ, TZ, UG, ZM, ZW), Eurasian (AM, AZ, BY, KG, KZ, RU, TJ, TM), European (AL, AT, BE, BG, CH, CY, CZ, DE, DK, EE, ES, FI, FR, GB, GR, HR, HU, IE, IS, IT, LT, LU, LV, MC, ME, MK, MT, NL, NO, PL, PT, RO, RS, SE, SI, SK, SM, TR), OAPI (BF, BJ, CF, CG, CI, CM, GA, GN, GQ, GW, KM, ML, MR, NE, SN, TD, TG).

Published:

— *with international search report (Art. 21(3))*